YASKAWA

Σ-7-Series AC Servo Drive

Σ-7S SERVOPACK with Analog Voltage/Pulse Train References Product Manual

Model: SGD7S-□□□□00A□□□□□□□

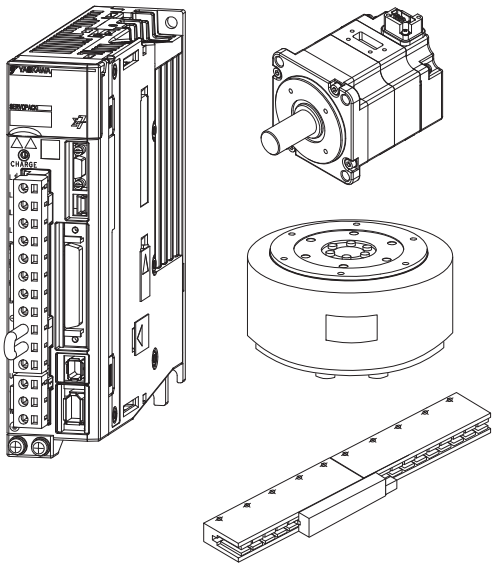

Basic Information on SERVOPACKs 1

Selecting a SERVOPACK 2

SERVOPACK Installation 3

Wiring and Connecting SERVOPACKs 4

Basic Functions That Require Setting before Operation 5

Application Functions 6

Trial Operation and Actual Operation 7

Tuning 8

Monitoring 9

Fully-Closed Loop Control 10

Safety Functions 11

Maintenance 12

Panel Displays and Panel Operator Procedures 13

Parameter Lists 14

Appendices 15

MANUAL NO. SIEP S800001 26T

Copyright © 2014 YASKAWA ELECTRIC CORPORATION

All rights reserved. No part of this publication may be reproduced, stored in a retrieval system, or transmitted, in any form, or by any means, mechanical, electronic, photocopying, recording, or otherwise, without the prior written permission of Yaskawa. No patent liability is assumed with respect to the use of the information contained herein. Moreover, because Yaskawa is constantly striving to improve its high-quality products, the information contained in this manual is subject to change without notice. Every precaution has been taken in the preparation of this manual. Nevertheless, Yaskawa assumes no responsibility for errors or omissions. Neither is any liability assumed for damages resulting from the use of the information contained in this publication.

About this Manual

This manual provides information required to select Σ-7S SERVOPACKs with Analog Voltage/Pulse Train References for Σ-7-Series AC Servo Drives, and to design, perform trial operation of, tune, operate, and maintain the Servo Drives.

Read and understand this manual to ensure correct usage of the Σ-7-Series AC Servo Drives.

Keep this manual in a safe place so that it can be referred to whenever necessary.

Outline of Manual

The contents of the chapters of this manual are described in the following table.

Refer to these chapters as required.

Chapter	Chapter Title	Contents
1	Basic Information on SERVOPACKs	Provides information required to select SERVOPACKs, such as SERVOPACK models and combinations with Servomotors.
2	Selecting a SERVOPACK	Provides information required to select SERVOPACKs, such as specifications, block diagrams, dimensional drawings, and connection examples.
3	SERVOPACK Installation	Provides information on installing SERVOPACKs in the required locations.
4	Wiring and Connecting SERVOPACKs	Provides information on wiring and connecting SERVOPACKs to power supplies and peripheral devices.
5	Basic Functions That Require Setting before Operation	Describes the basic functions that must be set before you start servo system operation. It also describes the setting methods.
6	Application Functions	Describes the application functions that you can set before you start servo system operation. It also describes the setting methods.
7	Trial Operation and Actual Operation	Provides information on the flow and procedures for trial operation and convenient functions to use during trial operation.
8	Tuning	Provides information on the flow of tuning, details on tuning functions, and related operating procedures.
9	Monitoring	Provides information on monitoring SERVOPACK product information and SERVOPACK status.
10	Fully-Closed Loop Control	Provides detailed information on performing fully-closed loop control with the SERVOPACK.
11	Safety Functions	Provides detailed information on the safety functions of the SERVOPACK.
12	Maintenance	Provides information on the meaning of, causes of, and corrections for alarms and warnings.
13	Panel Displays and Panel Operator Procedures	Describes how to interpret panel displays and the operation of the Panel Operator.
14	Parameter Lists	Provides information on the parameters.
15	Appendices	Provides host controller connection examples and tables of corresponding SERVOPACK and SigmaWin+ function names.

Related Documents

The relationships between the documents that are related to the Servo Drives are shown in the following figure. The numbers in the figure correspond to the numbers in the table on the following pages. Refer to these documents as required.

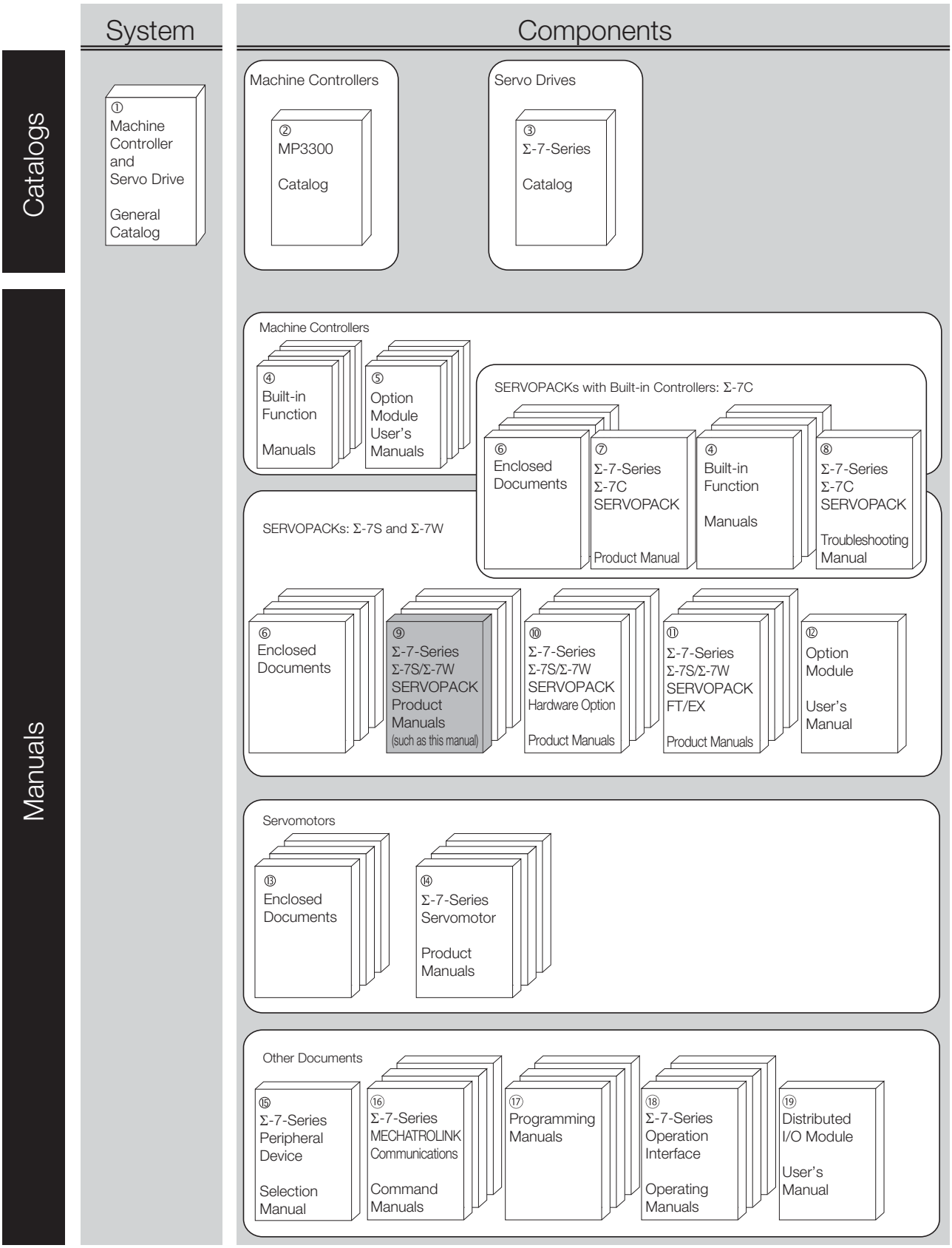

Classification	Document Name	Document No.	Description
① Machine Controller and Servo Drive General Catalog	Machine Controller and AC Servo Drive Solutions Catalog	KAEP S800001 22	Describes the features and application examples for combinations of MP3000-Series Machine Controllers and Σ-7-Series AC Servo Drives.
② MP3300 Catalog	Machine Controller MP3300	KAEP C880725 03	Provides detailed information on MP3300 Machine Controllers, including features and specifications.
③ Σ-7-Series Catalog	AC Servo Drives Σ-7 Series	KAEP S800001 23	Provides detailed information on Σ-7-Series AC Servo Drives, including features and specifications.
④ Built-in Function Manuals	Σ-7-Series AC Servo Drive Σ-7C SERVOPACK Motion Control User's Manual	SIEP S800002 03	Provides detailed information on the specifications, system configuration, and application methods of the Motion Control Function Modules (SVD, SVC4, and SVR4) for Σ-7-Series Σ-7C SERVOPACKs.
	Machine Controller MP3000 Series Communications User's Manual	SIEP C880725 12	Provides detailed information on the specifications, system configuration, and communications connection methods for the Ethernet communications that are used with MP3000-Series Machine Controllers and Σ-7-Series Σ-7C SERVOPACKs.
⑤ Option Module User's Manuals	Machine Controller MP2000 Series Communication Module User's Manual	SIEP C880700 04	Provide detailed information on the specifications and communications methods for the Communications Modules that can be mounted to MP3000-Series Machine Controllers and Σ-7-Series Σ-7C SERVOPACKs.
	Machine Controller MP2000 Series 262IF-01 FL-net Communication Module User's Manual	SIEP C880700 36	
	Machine Controller MP2000 Series 263IF-01 EtherNet/IP Communication Module User's Manual	SIEP C880700 39	
	Machine Controller MP2000 Series I/O Module User's Manual	SIEP C880700 34	Provide detailed information on the specifications and communications methods for the I/O Modules that can be mounted to MP3000-Series Machine Controllers and Σ-7-Series Σ-7C SERVOPACKs.
	Machine Controller MP2000 Series Analog Input/Analog Output Module AI-01/AO-01 User's Manual	SIEP C880700 26	
	Machine Controller MP2000 Series Counter Module CNTR-01 User's Manual	SIEP C880700 27	

Continued on next page.

Continued from previous page.

Classification	Document Name	Document No.	Description
⑥ Enclosed Documents	Σ-7-Series AC Servo Drive Σ-7S, Σ-7W, and Σ-7C SERVOPACK Safety Precautions	TOMP C710828 00	Provides detailed information for the safe usage of Σ-7-Series SERVOPACKs.
	Σ-V-Series/Σ-V-Series for Large-Capacity Models/ Σ-7-Series Safety Precautions Option Module	TOBP C720829 00	Provides detailed information for the safe usage of Option Modules.
	Σ-V-Series/Σ-V-Series for Large-Capacity Models/ Σ-7-Series Installation Guide Command Option Module	TOBP C720829 01	Provides detailed procedures for installing the Command Option Module in a SERVOPACK.
	Σ-V-Series/Σ-V-Series for Large-Capacity Models/ Σ-7-Series Installation Guide Fully-closed Module	TOBP C720829 03	Provides detailed procedures for installing the Fully-closed Module in a SERVOPACK.
	Σ-V-Series/Σ-V-Series for Large-Capacity Models/ Σ-7-Series Installation Guide Safety Module	TOBP C720829 06	Provides detailed procedures for installing the Safety Module in a SERVOPACK.
	Σ-V-Series/Σ-V-Series for Large-Capacity Models/ Σ-7-Series Installation Guide INDEXER Module	TOBP C720829 02	Provides detailed procedures for installing the INDEXER Module in a SERVOPACK.
	Σ-V-Series/Σ-V-Series for Large-Capacity Models/ Σ-7-Series Installation Guide DeviceNet Module	TOBP C720829 07	Provides detailed procedures for installing the DeviceNet Module in a SERVOPACK.
⑦ Σ-7-Series Σ-7C SERVOPACK Product Manual	Σ-7-Series AC Servo Drive Σ-7C SERVOPACK Product Manual	SIEP S800002 04	Provides detailed information on selecting Σ-7-Series Σ-7C SERVOPACKs; installing, connecting, setting, testing in trial operation, and tuning Servo Drives; writing, monitoring, and maintaining programs; and other information.
⑧ Σ-7-Series Σ-7C SERVOPACK Troubleshooting Manual	Σ-7-Series AC Servo Drive Σ-7C SERVOPACK Troubleshooting Manual	SIEP S800002 07	Provides detailed troubleshooting information for Σ-7-Series Σ-7C SERVOPACKs.

Continued on next page.

Continued from previous page.

Classification	Document Name	Document No.	Description
⑨ Σ-7-Series Σ-7S/Σ-7W SERVOPACK Product Manuals	Σ-7-Series AC Servo Drive Σ-7S SERVOPACK with MECHATROLINK-4 Communications References Product Manual	SIEP S800002 31	Provide detailed information on selecting Σ-7-Series Σ-7S and Σ-7W SERVOPACKs; installing, connecting, setting, testing in trial operation, tuning, monitoring, and maintaining Servo Drives; and other information.
	Σ-7-Series AC Servo Drive Σ-7S SERVOPACK with MECHATROLINK-III Communications References Product Manual	SIEP S800001 28	
	Σ-7-Series AC Servo Drive Σ-7S SERVOPACK with MECHATROLINK-II Communications References Product Manual	SIEP S800001 27	
	Σ-7-Series AC Servo Drive Σ-7S SERVOPACK with Analog Voltage/Pulse Train References Product Manual	This manual (SIEP S800001 26)	
	Σ-7-Series AC Servo Drive Σ-7S SERVOPACK Command Option Attachable Type with INDEXER Module Product Manual	SIEP S800001 64	
	Σ-7-Series AC Servo Drive Σ-7S SERVOPACK Command Option Attachable Type with DeviceNet Module Product Manual	SIEP S800001 70	
	Σ-7-Series AC Servo Drive Σ-7W SERVOPACK with MECHATROLINK-III Communications References Product Manual	SIEP S800001 29	
⑩ Σ-7-Series Σ-7S/Σ-7W SERVOPACK with Hardware Option Specifications Product Manuals	Σ-7-Series AC Servo Drive Σ-7S/Σ-7W SERVOPACK with Hardware Option Specifica- tions Dynamic Brake Product Manual	SIEP S800001 73	Provide detailed information on Hardware Options for Σ-7-Series SERVOPACKs.
	Σ-7-Series AC Servo Drive Σ-7W/Σ-7C SERVOPACK with Hardware Option Specifica- tions HWBB Function Product Manual	SIEP S800001 72	

Continued on next page.

Continued from previous page.

Classification	Document Name	Document No.	Description
⑪ Σ-7-Series Σ-7S/Σ-7W SERVOPACK FT/EX Product Manuals	Σ-7-Series AC Servo Drive Σ-7S SERVOPACK with FT/EX Specification for Indexing Application Product Manual	SIEP S800001 84	Provide detailed information on the FT/EX Option for Σ-7-Series SERVOPACKs.
	Σ-7-Series AC Servo Drive Σ-7S SERVOPACK with FT/EX Specification for Tracking Application Product Manual	SIEP S800001 89	
	Σ-7-Series AC Servo Drive Σ-7S SERVOPACK with FT/EX Specification for Application with Special Motor, SGM7D Motor Product Manual	SIEP S800001 91	
	Σ-7-Series AC Servo Drive Σ-7S SERVOPACK with FT/EX Specification for Press and Injection Molding Application Product Manual	SIEP S800001 94	
	Σ-7-Series AC Servo Drive Σ-7S SERVOPACK with FT/EX Specification for Transfer and Alignment Application Product Manual	SIEP S800001 95	
	Σ-7-Series AC Servo Drive Σ-7S SERVOPACK with FT/EX Specification for Torque/Force Assistance for Conveyance Application Product Manual	SIEP S800002 09	
	Σ-7-Series AC Servo Drive Σ-7S SERVOPACK with FT/EX Specification for Cutting Application Feed Shaft Motor Product Manual	SIEP S800002 10	
	Σ-7-Series AC Servo Drive Σ-7S SERVOPACK with FT/EX Specification for Three-Point Latching for Conveyance Application Product Manual	SIEP S800002 17	
	Σ-7-Series AC Servo Drive Σ-7S SERVOPACK with FT/EX Specification for Semi-/Fully-Closed Loop Control Online Switching for Conveyance Application Product Manual	SIEP S800002 27	
	Σ-7-Series AC Servo Drive Σ-7W SERVOPACK with FT/EX Specification for Gantry Applications Product Manual	SIEP S800002 29	

Continued on next page.

Continued from previous page.

Classification	Document Name	Document No.	Description
⑫ Option Module User's Manual	AC Servo Drives Σ-V Series/Σ-V Series for Large-Capacity Models/ Σ-7 Series User's Manual Safety Module	SIEP C720829 06	Provides detailed information required for the design and maintenance of a Safety Module.
⑬ Enclosed Documents	AC Servo Drive Rotary Servomotor Safety Precautions	TOBP C230260 00	Provides detailed information for the safe usage of Rotary Servomotors and Direct Drive Servomotors.
	AC Servomotor Linear Σ Series Safety Precautions	TOBP C230800 00	Provides detailed information for the safe usage of Linear Servomotors.
⑭ Σ-7-Series Servomotor Product Manuals	Σ-7-Series AC Servo Drive Rotary Servomotor Product Manual	SIEP S800001 36	Provide detailed information on selecting, installing, and connecting the Σ-7-Series Servomotors.
	Σ-7-Series AC Servo Drive Linear Servomotor Product Manual	SIEP S800001 37	
	Σ-7-Series AC Servo Drive Direct Drive Servomotor Product Manual	SIEP S800001 38	
⑮ Σ-7-Series Peripheral Device Selection Manual	Σ-7-Series AC Servo Drive Peripheral Device Selection Manual	SIEP S800001 32	Provides the following information in detail for Σ-7-Series Servo Systems. • Cables: Models, dimensions, wiring materials, connector models, and connection specifications • Peripheral devices: Models, specifications, diagrams, and selection (calculation) methods
⑯ Σ-7-Series MECHATROLINK Communications Command Manuals	Σ-7-Series AC Servo Drive MECHATROLINK-II Communications Command Manual	SIEP S800001 30	Provides detailed information on the MECHATROLINK-II communications commands that are used for a Σ-7-Series Servo System.
	Σ-7-Series AC Servo Drive MECHATROLINK-III Communications Standard Servo Profile Command Manual	SIEP S800001 31	Provides detailed information on the MECHATROLINK-III communications standard servo profile commands that are used for a Σ-7-Series Servo System.
	Σ-7-Series AC Servo Drive MECHATROLINK-4 Communications Standard Servo Profile Command Manual	SIEP S800002 32	Provides detailed information on the MECHATROLINK-4 communications standard servo profile commands that are used for a Σ-7- Series Servo System.
⑰ Programming Manuals	Machine Controller MP3000 Series Ladder Programming Manual	SIEP C880725 13	Provides detailed information on the ladder programming specifications and instructions for MP3000-Series Machine Controllers and Σ-7-Series Σ-7C SERVOPACKs.
	Machine Controller MP3000 Series Motion Programming Manual	SIEP C880725 14	Provides detailed information on the motion programming and sequence programming specifications and instructions for MP3000-Series Machine Controllers and Σ-7-Series Σ-7C SERVOPACKs.

Continued on next page.

Continued from previous page.

Classification	Document Name	Document No.	Description
⑱ Σ-7-Series Operation Interface Operating Manuals	System Integrated Engineering Tool MPE720 Version 7 USER'S MANUAL	SIEP C880761 03	Describes in detail how to operate MPE720 version 7.
	Σ-7-Series AC Servo Drive Digital Operator Operating Manual	SIEP S800001 33	Describes the operating procedures for a Digital Operator for a Σ-7-Series Servo System.
	AC Servo Drive Engineering Tool SigmaWin+ Operation Manual	SIET S800001 34	Provides detailed operating procedures for the SigmaWin+ Engineering Tool for a Σ-7-Series Servo System.
⑲ Distributed I/O Module User's Manual	MECHATROLINK-III Compatible I/O Module User's Manual	SIEP C880781 04	Describes the functions, specifications, operating methods, and MECHATROLINK-III communications for the Remote I/O Modules for MP2000/MP3000-Series Machine Controllers.
	MECHATROLINK-4 Compatible I/O Module User's Manual	SIEP C880782 01	Describes the functions, specifications, operating methods, and MECHATROLINK-4 communications for the Remote I/O Modules for MP3000-Series Machine Controllers.

Using This Manual

◆ Technical Terms Used in This Manual

The following terms are used in this manual.

Term	Meaning
Servomotor	A Σ-7-Series Rotary Servomotor, Direct Drive Servomotor, or Linear Servomotor.
Rotary Servomotor	A generic term used for a Σ-7-Series Rotary Servomotor (SGM7M, SGM7J, SGM7A, SGM7P, SGM7G, or SGMMV) or a Direct Drive Servomotor (SGM7E, SGM7F, SGMCV, or SGMCS). The descriptions will specify when Direct Drive Servomotors are excluded.
Linear Servomotor	A generic term used for a Σ-7-Series Linear Servomotor (SGLG, SGLF, or SGLT).
SERVOPACK	A Σ-7-Series Σ-7S Servo Amplifier with Analog Voltage/Pulse Train References.
Servo Drive	The combination of a Servomotor and SERVOPACK.
Servo System	A servo control system that includes the combination of a Servo Drive with a host controller and peripheral devices.
servo ON	Supplying power to the motor.
servo OFF	Not supplying power to the motor.
base block (BB)	Shutting OFF the power supply to the motor by shutting OFF the base current to the power transistor in the SERVOPACK.
servo lock	A state in which the motor is stopped and is in a position loop with a position reference of 0.
Main Circuit Cable	One of the cables that connect to the main circuit terminals, including the Main Circuit Power Supply Cable, Control Power Supply Cable, and Servomotor Main Circuit Cable.
SigmaWin+	The Engineering Tool for setting up and tuning Servo Drives or a computer in which the Engineering Tool is installed.

◆ Differences in Terms for Rotary Servomotors and Linear Servomotors

There are differences in the terms that are used for Rotary Servomotors and Linear Servomotors. This manual primarily describes Rotary Servomotors. If you are using a Linear Servomotor, you need to interpret the terms as given in the following table.

Rotary Servomotors	Linear Servomotors
torque	force
moment of inertia	mass
rotation	movement
forward rotation and reverse rotation	forward movement and reverse movement
CW and CCW pulse trains	forward and reverse pulse trains
rotary encoder	linear encoder
absolute rotary encoder	absolute linear encoder
incremental rotary encoder	incremental linear encoder
unit: min^{-1}	unit: mm/s
unit: N·m	unit: N

◆ Notation Used in this Manual

■ Notation for Reverse Signals

The names of reverse signals (i.e., ones that are valid when low) are written with a forward slash (/) before the signal abbreviation.

Notation Example

$\overline{\text{BK}}$ is written as /BK.

■ Notation for Parameters

The notation depends on whether the parameter requires a numeric setting (parameter for numeric setting) or requires the selection of a function (parameter for selecting functions).

- Parameters for Numeric Settings

The control methods for which the parameters apply are given.
Speed : Speed control Position : Position control Torque : Torque control

Pn100	Speed Loop Gain				Speed Position
	Setting Range	Setting Unit	Default Setting	When Enabled	Classification
	10 to 20,000	0.1 Hz	400	Immediately	Tuning

Parameter number

This is the setting range for the parameter.

This is the minimum unit (setting increment) that you can set for the parameter.

This is the parameter setting before shipment.

This is when any change made to the parameter will become effective.

This is the parameter classification.

- Parameters for Selecting Functions

Parameter		Meaning	When Enabled	Classification
Pn002	n.□0□□ (default setting)	Use the encoder according to encoder specifications.	After restart	Setup
	n.□1□□	Use the encoder as an incremental encoder.		
	n.□2□□	Use the encoder as a single-turn absolute encoder.		

Parameter number

The notation "n.□□□□" indicates a parameter for selecting functions.
Each □ indicates the setting for one digit.
The notation shown here means that the third digit from the right is set to 2.

This column explains the selections for the function.

Notation Example

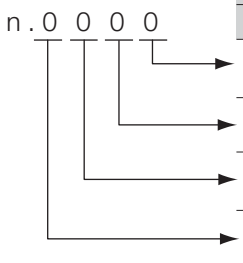

Notation Examples for Pn002

Digit Notation		Numeric Value Notation	
Notation	Meaning	Notation	Meaning
Pn002 = n.□□□X	Indicates the first digit from the right in Pn002.	Pn002 = n.□□□1	Indicates that the first digit from the right in Pn002 is set to 1.
Pn002 = n.□□X□	Indicates the second digit from the right in Pn002.	Pn002 = n.□□1□	Indicates that the second digit from the right in Pn002 is set to 1.
Pn002 = n.□X□□	Indicates the third digit from the right in Pn002.	Pn002 = n.□1□□	Indicates that the third digit from the right in Pn002 is set to 1.
Pn002 = n.X□□□	Indicates the fourth digit from the right in Pn002.	Pn002 = n.1□□□	Indicates that the fourth digit from the right in Pn002 is set to 1.

◆ Engineering Tools Used in This Manual

This manual uses the interfaces of the SigmaWin+ for descriptions.

◆ Trademarks

- QR code is a trademark of Denso Wave Inc.
- Other product names and company names are the trademarks or registered trademarks of the respective company. “TM” and the ® mark do not appear with product or company names in this manual.

◆ Visual Aids

The following aids are used to indicate certain types of information for easier reference.

Important

Indicates precautions or restrictions that must be observed.
Also indicates alarm displays and other precautions that will not result in machine damage.

Term

Indicates definitions of difficult terms or terms that have not been previously explained in this manual.

Example Indicates operating or setting examples.

Information Indicates supplemental information to deepen understanding or useful information.

Safety Precautions

◆ Safety Information

To prevent personal injury and equipment damage in advance, the following signal words are used to indicate safety precautions in this document. The signal words are used to classify the hazards and the degree of damage or injury that may occur if a product is used incorrectly. Information marked as shown below is important for safety. Always read this information and heed the precautions that are provided.

⚠ DANGER

- Indicates precautions that, if not heeded, are likely to result in loss of life, serious injury, or fire.

⚠ WARNING

- Indicates precautions that, if not heeded, could result in loss of life, serious injury, or fire.

⚠ CAUTION

- Indicates precautions that, if not heeded, could result in relatively serious or minor injury, or in fire.

NOTICE

- Indicates precautions that, if not heeded, could result in property damage.

◆ Safety Precautions That Must Always Be Observed

■ General Precautions

⚠ DANGER

- Read and understand this manual to ensure the safe usage of the product.
- Keep this manual in a safe, convenient place so that it can be referred to whenever necessary. Make sure that it is delivered to the final user of the product.
- Do not remove covers, cables, connectors, or optional devices while power is being supplied to the SERVOPACK.
  There is a risk of electric shock, operational failure of the product, or burning.

⚠ WARNING

- Use a power supply with specifications (number of phases, voltage, frequency, and AC/DC type) that are appropriate for the product.
  There is a risk of burning, electric shock, or fire.
- Connect the ground terminals on the SERVOPACK and Servomotor to ground poles according to local electrical codes (100 Ω or less for a SERVOPACK with a 100-VAC or 200-VAC power supply, and 10 Ω or less for a SERVOPACK with a 400-VAC power supply).
  There is a risk of electric shock or fire.
- Do not attempt to disassemble, repair, or modify the product.
  There is a risk of fire or failure.
  The warranty is void for the product if you disassemble, repair, or modify it.

⚠ CAUTION

- The SERVOPACK heat sinks, regenerative resistors, External Dynamic Brake Resistors, Servomotors, and other components can be very hot while power is ON or soon after the power is turned OFF. Implement safety measures, such as installing covers, so that hands and parts such as cables do not come into contact with hot components.
  There is a risk of burn injury.
- For a 24-VDC power supply, use a power supply device with double insulation or reinforced insulation.
  There is a risk of electric shock.
- Do not damage, pull on, apply excessive force to, place heavy objects on, or pinch cables.
  There is a risk of failure, damage, or electric shock.
- The person who designs the system that uses the hard wire base block safety function must have a complete knowledge of the related safety standards and a complete understanding of the instructions in this document.
  There is a risk of injury, product damage, or machine damage.
- Do not use the product in an environment that is subject to water, corrosive gases, or flammable gases, or near flammable materials.
  There is a risk of electric shock or fire.

NOTICE

- Do not attempt to use a SERVOPACK or Servomotor that is damaged or that has missing parts.
- Install external emergency stop circuits that shut OFF the power supply and stops operation immediately when an error occurs.
- In locations with poor power supply conditions, install the necessary protective devices (such as AC reactors) to ensure that the input power is supplied within the specified voltage range.
  There is a risk of damage to the SERVOPACK.
- Use a Noise Filter to minimize the effects of electromagnetic interference.
  Electronic devices used near the SERVOPACK may be affected by electromagnetic interference.
- Always use a Servomotor and SERVOPACK in one of the specified combinations.
- Do not touch a SERVOPACK or Servomotor with wet hands.
  There is a risk of product failure.

■ Storage Precautions

⚠ CAUTION

- Do not place an excessive load on the product during storage. (Follow all instructions on the packages.)
  There is a risk of injury or damage.

NOTICE

- Do not install or store the product in any of the following locations.
  - Locations that are subject to direct sunlight
  - Locations that are subject to ambient temperatures that exceed product specifications
  - Locations that are subject to relative humidities that exceed product specifications
  - Locations that are subject to condensation as the result of extreme changes in temperature
  - Locations that are subject to corrosive or flammable gases
  - Locations that are near flammable materials
  - Locations that are subject to dust, salts, or iron powder
  - Locations that are subject to water, oil, or chemicals
  - Locations that are subject to vibration or shock that exceeds product specifications
  - Locations that are subject to radiation

  If you store or install the product in any of the above locations, the product may fail or be damaged.

■ Transportation Precautions

⚠ CAUTION

- Transport the product in a way that is suitable to the mass of the product.
- Do not use the eyebolts on a SERVOPACK or Servomotor to move the machine.
  There is a risk of damage or injury.
- When you handle a SERVOPACK or Servomotor, be careful of sharp parts, such as the corners.
  There is a risk of injury.
- Do not place an excessive load on the product during transportation. (Follow all instructions on the packages.)
  There is a risk of injury or damage.

NOTICE

- Do not hold onto the front cover or connectors when you move a SERVOPACK.
  There is a risk of the SERVOPACK falling.
- A SERVOPACK or Servomotor is a precision device. Do not drop it or subject it to strong shock.
  There is a risk of failure or damage.
- Do not subject connectors to shock.
  There is a risk of faulty connections or damage.
- If disinfectants or insecticides must be used to treat packing materials such as wooden frames, plywood, or pallets, the packing materials must be treated before the product is packaged, and methods other than fumigation must be used.
  Example: Heat treatment, where materials are kiln-dried to a core temperature of 56°C for 30 minutes or more.
  If the electronic products, which include stand-alone products and products installed in machines, are packed with fumigated wooden materials, the electrical components may be greatly damaged by the gases or fumes resulting from the fumigation process. In particular, disinfectants containing halogen, which includes chlorine, fluorine, bromine, or iodine can contribute to the erosion of the capacitors.
- Do not overtighten the eyebolts on a SERVOPACK or Servomotor.
  If you use a tool to overtighten the eyebolts, the tapped holes may be damaged.

■ Installation Precautions

⚠ CAUTION

- Install the Servomotor or SERVOPACK in a way that will support the mass given in technical documents.
- Install SERVOPACKs, Servomotors, regenerative resistors, and External Dynamic Brake Resistors on nonflammable materials.
  Installation directly onto or near flammable materials may result in fire.
- Provide the specified clearances between the SERVOPACK and the control panel as well as with other devices.
  There is a risk of fire or failure.
- Install the SERVOPACK in the specified orientation.
  There is a risk of fire or failure.
- Do not step on or place a heavy object on the product.
  There is a risk of failure, damage, or injury.
- Do not allow any foreign matter to enter the SERVOPACK or Servomotor.
  There is a risk of failure or fire.

NOTICE

- Do not install or store the product in any of the following locations.
  - Locations that are subject to direct sunlight
  - Locations that are subject to ambient temperatures that exceed product specifications
  - Locations that are subject to relative humidities that exceed product specifications
  - Locations that are subject to condensation as the result of extreme changes in temperature
  - Locations that are subject to corrosive or flammable gases
  - Locations that are near flammable materials
  - Locations that are subject to dust, salts, or iron powder
  - Locations that are subject to water, oil, or chemicals
  - Locations that are subject to vibration or shock that exceeds product specifications
  - Locations that are subject to radiation

  If you store or install the product in any of the above locations, the product may fail or be damaged.
- Use the product in an environment that is appropriate for the product specifications.
  If you use the product in an environment that exceeds product specifications, the product may fail or be damaged.
- A SERVOPACK or Servomotor is a precision device. Do not drop it or subject it to strong shock.
  There is a risk of failure or damage.
- Always install a SERVOPACK in a control panel.
- Do not allow any foreign matter to enter a SERVOPACK or a Servomotor with a Cooling Fan and do not cover the outlet from the Servomotor's cooling fan.
  There is a risk of failure.

■ Wiring Precautions

⚠ DANGER

- Do not change any wiring while power is being supplied.
  There is a risk of electric shock or injury.

⚠ WARNING

- Wiring and inspections must be performed only by qualified engineers.
  There is a risk of electric shock or product failure.
- Check all wiring and power supplies carefully.
  Incorrect wiring or incorrect voltage application to the output circuits may cause short-circuit failures. If a short-circuit failure occurs as a result of any of these causes, the holding brake will not work. This could damage the machine or cause an accident that may result in death or injury.
- Connect the AC and DC power supplies to the specified SERVOPACK terminals.
  - Connect an AC power supply to the L1, L2, and L3 terminals and the L1C and L2C terminals on the SERVOPACK.
  - Connect a DC power supply to the B1/⊕ and ⊖2 terminals and the L1C and L2C terminals on the SERVOPACK.

  There is a risk of failure or fire.
- If you use a SERVOPACK with the Dynamic Brake Hardware Option, connect an External Dynamic Brake Resistor that is suitable for the machine and equipment specifications to the specified terminals.
  There is a risk of unexpected operation, machine damage, burning, or injury when an emergency stop is performed.

⚠ CAUTION

- Wait for at least six minutes after turning OFF the power supply (with a SERVOPACK for a 100-VAC power supply input, wait for at least nine minutes) and then make sure that the CHARGE indicator is not lit before starting wiring or inspection work. Do not touch the power supply terminals while the CHARGE lamp is lit because high voltage may still remain in the SERVOPACK even after turning OFF the power supply.
  There is a risk of electric shock.
- Observe the precautions and instructions for wiring and trial operation precisely as described in this document.
  Failures caused by incorrect wiring or incorrect voltage application in the brake circuit may cause the SERVOPACK to fail, damage the equipment, or cause an accident resulting in death or injury.
- Check the wiring to be sure it has been performed correctly.
  Connectors and pin layouts are sometimes different for different models. Always confirm the pin layouts in technical documents for your model before operation.
  There is a risk of failure or malfunction.
- Connect wires to power supply terminals and motor connection terminals securely with the specified methods and tightening torque.
  Insufficient tightening may cause wires and terminal blocks to generate heat due to faulty contact, possibly resulting in fire.
- Use shielded twisted-pair cables or screened unshielded multi-twisted-pair cables for I/O Signal Cables and Encoder Cables.
- The maximum wiring length is 3 m for I/O Signal Cables, and 50 m for Encoder Cables or Servomotor Main Circuit Cables.
- Observe the following precautions when wiring the SERVOPACK's main circuit terminals.
  - Turn ON the power supply to the SERVOPACK only after all wiring, including the main circuit terminals, has been completed.
  - If a connector is used for the main circuit terminals, remove the main circuit connector from the SERVOPACK before you wire it.
  - Insert only one wire per insertion hole in the main circuit terminals.
  - When you insert a wire, make sure that the conductor wire (e.g., whiskers) does not come into contact with adjacent wires and cause a short-circuit.
- Install molded-case circuit breakers and other safety measures to provide protection against short circuits in external wiring.
  There is a risk of fire or failure.

NOTICE

- Whenever possible, use the Cables specified by Yaskawa.
  If you use any other cables, confirm the rated current and application environment of your model and use the wiring materials specified by Yaskawa or equivalent materials.
- Securely tighten connector screws and lock mechanisms.
  Insufficient tightening may result in connectors falling off during operation.
- Do not bundle power lines (e.g., the Main Circuit Cable) and low-current lines (e.g., the I/O Signal Cables or Encoder Cables) together or run them through the same duct. If you do not place power lines and low-current lines in separate ducts, separate them by at least 30 cm.
  If the cables are too close to each other, malfunctions may occur due to noise affecting the low-current lines.
- Install a battery at either the host controller or on the Encoder Cable.
  If you install batteries both at the host controller and on the Encoder Cable at the same time, you will create a loop circuit between the batteries, resulting in a risk of damage or burning.
- When connecting a battery, connect the polarity correctly.
  There is a risk of battery rupture or encoder failure.

■ Operation Precautions

⚠ WARNING

- Before starting operation with a machine connected, change the settings of the switches and parameters to match the machine.
  Unexpected machine operation, failure, or personal injury may occur if operation is started before appropriate settings are made.
- Do not radically change the settings of the parameters.
  There is a risk of unstable operation, machine damage, or injury.
- Install limit switches or stoppers at the ends of the moving parts of the machine to prevent unexpected accidents.
  There is a risk of machine damage or injury.
- For trial operation, securely mount the Servomotor and disconnect it from the machine.
  There is a risk of injury.
- Forcing the motor to stop for overtravel is disabled when the Jog, Origin Search, or Easy FFT utility function is executed. Take necessary precautions.
  There is a risk of machine damage or injury.
- When an alarm occurs, the Servomotor will coast to a stop or stop with the dynamic brake according to the SERVOPACK Option and settings. The coasting distance will change with the moment of inertia of the load and the resistance of the External Dynamic Brake Resistor. Check the coasting distance during trial operation and implement suitable safety measures on the machine.
- Do not enter the machine's range of motion during operation.
  There is a risk of injury.
- Do not touch the moving parts of the Servomotor or machine during operation.
  There is a risk of injury.

⚠ CAUTION

- Design the system to ensure safety even when problems, such as broken signal lines, occur. For example, the P-OT and N-OT signals are set in the default settings to operate on the safe side if a signal line breaks. Do not change the polarity of this type of signal.
- When overtravel occurs, the power supply to the motor is turned OFF and the brake is released. If you use the Servomotor to drive a vertical load, set the Servomotor to enter a zero-clamped state after the Servomotor stops. Also, install safety devices (such as an external brake or counterweight) to prevent the moving parts of the machine from falling.
- Always turn OFF the servo before you turn OFF the power supply. If you turn OFF the main circuit power supply or control power supply during operation before you turn OFF the servo, the Servomotor will stop as follows:
  - If you turn OFF the main circuit power supply during operation without turning OFF the servo, the Servomotor will stop abruptly with the dynamic brake.
  - If you turn OFF the control power supply without turning OFF the servo, the stopping method that is used by the Servomotor depends on the model of the SERVOPACK. For details, refer to the manual for the SERVOPACK.
  - If you use a SERVOPACK with the Dynamic Brake Hardware Option, the Servomotor stopping methods will be different from the stopping methods used without the Option or with other Hardware Options. For details, refer to the following manual.
    📖 Σ-7-Series Σ-7S/Σ-7W SERVOPACK with Dynamic Brake Hardware Option Specifications Product Manual (Manual No.: SIEP S800001 73)
- Do not use the dynamic brake for any application other than an emergency stop.
  There is a risk of failure due to rapid deterioration of elements in the SERVOPACK and the risk of unexpected operation, machine damage, burning, or injury.

NOTICE

- When you adjust the gain during system commissioning, use a measuring instrument to monitor the torque waveform and speed waveform and confirm that there is no vibration.
  If a high gain causes vibration, the Servomotor will be damaged quickly.
- Do not frequently turn the power supply ON and OFF. After you have started actual operation, allow at least one hour between turning the power supply ON and OFF (as a guideline).
  Do not use the product in applications that require the power supply to be turned ON and OFF frequently.
  The elements in the SERVOPACK will deteriorate quickly.
- An alarm or warning may occur if communications are performed with the host controller while the SigmaWin+ or Digital Operator is operating.
  If an alarm or warning occurs, it may interrupt the current process and stop the system.
- After you complete trial operation of the machine and facilities, use the SigmaWin+ to back up the settings of the SERVOPACK parameters. You can use them to reset the parameters after SERVOPACK replacement.
  If you do not copy backed up parameter settings, normal operation may not be possible after a faulty SERVOPACK is replaced, possibly resulting in machine or equipment damage.

■ Maintenance and Inspection Precautions

⚠ DANGER

- Do not change any wiring while power is being supplied.
  There is a risk of electric shock or injury.

⚠ WARNING

- Wiring and inspections must be performed only by qualified engineers.
  There is a risk of electric shock or product failure.

⚠ CAUTION

- Wait for at least six minutes after turning OFF the power supply (with a SERVOPACK for a 100-VAC power supply input, wait for at least nine minutes) and then make sure that the CHARGE indicator is not lit before starting wiring or inspection work. Do not touch the power supply terminals while the CHARGE lamp is lit because high voltage may still remain in the SERVOPACK even after turning OFF the power supply.
  There is a risk of electric shock.
- Before you replace a SERVOPACK, back up the settings of the SERVOPACK parameters. Copy the backed up parameter settings to the new SERVOPACK and confirm that they were copied correctly.
  If you do not copy backed up parameter settings or if the copy operation is not completed correctly, normal operation may not be possible, possibly resulting in machine or equipment damage.

NOTICE

- Discharge all static electricity from your body before you operate any of the buttons or switches inside the front cover of the SERVOPACK.
  There is a risk of equipment damage.

■ Troubleshooting Precautions

⚠ DANGER

- If the safety device (molded-case circuit breaker or fuse) installed in the power supply line operates, remove the cause before you supply power to the SERVOPACK again. If necessary, repair or replace the SERVOPACK, check the wiring, and remove the factor that caused the safety device to operate.
  There is a risk of fire, electric shock, or injury.

⚠ WARNING

- The product may suddenly start to operate when the power supply is recovered after a momentary power interruption. Design the machine to ensure human safety when operation restarts.
  There is a risk of injury.

⚠ CAUTION

- When an alarm occurs, remove the cause of the alarm and ensure safety. Then reset the alarm or turn the power supply OFF and ON again to restart operation.
  There is a risk of injury or machine damage.
- If the Servo ON signal is input to the SERVOPACK and an alarm is reset, the Servomotor may suddenly restart operation. Confirm that the servo is OFF and ensure safety before you reset an alarm.
  There is a risk of injury or machine damage.
- Always insert a magnetic contactor in the line between the main circuit power supply and the main circuit power supply terminals on the SERVOPACK so that the power supply can be shut OFF at the main circuit power supply.
  If a magnetic contactor is not connected when the SERVOPACK fails, a large current may flow continuously, possibly resulting in fire.
- If an alarm occurs, shut OFF the main circuit power supply.
  There is a risk of fire due to a regenerative resistor overheating as the result of regenerative transistor failure.
- Install a ground fault detector against overloads and short-circuiting or install a molded-case circuit breaker combined with a ground fault detector.
  There is a risk of SERVOPACK failure or fire if a ground fault occurs.
- The holding brake on a Servomotor will not ensure safety if there is the possibility that an external force (including gravity) may move the current position and create a hazardous situation when power is interrupted or an error occurs. If an external force may cause movement, install an external braking mechanism that ensures safety.

■ Disposal Precautions

- Correctly discard the product as stipulated by regional, local, and municipal laws and regulations. Be sure to include these contents in all labelling and warning notifications on the final product as necessary.

■ General Precautions

- Figures provided in this manual are typical examples or conceptual representations. There may be differences between them and actual wiring, circuits, and products.
- The products shown in illustrations in this manual are sometimes shown with their covers or protective guards removed to illustrate detail. Always replace all covers and protective guards before you use the product.
- If you need a new copy of this manual because it has been lost or damaged, contact your nearest Yaskawa representative or one of the offices listed on the back of this manual.
- This manual is subject to change without notice for product improvements, specifications changes, and improvements to the manual itself.
  We will update the manual number of the manual and issue revisions when changes are made.
- Any and all quality guarantees provided by Yaskawa are null and void if the customer modifies the product in any way. Yaskawa disavows any responsibility for damages or losses that are caused by modified products.

Warranty

◆ Details of Warranty

■ Warranty Period

The warranty period for a product that was purchased (hereinafter called the “delivered product”) is one year from the time of delivery to the location specified by the customer or 18 months from the time of shipment from the Yaskawa factory, whichever is sooner.

■ Warranty Scope

Yaskawa shall replace or repair a defective product free of charge if a defect attributable to Yaskawa occurs during the above warranty period.
This warranty does not cover defects caused by the delivered product reaching the end of its service life and replacement of parts that require replacement or that have a limited service life.

This warranty does not cover failures that result from any of the following causes.

- Improper handling, abuse, or use in unsuitable conditions or in environments not described in product catalogs or manuals, or in any separately agreed-upon specifications
- Causes not attributable to the delivered product itself
- Modifications or repairs not performed by Yaskawa
- Use of the delivered product in a manner in which it was not originally intended
- Causes that were not foreseeable with the scientific and technological understanding at the time of shipment from Yaskawa
- Events for which Yaskawa is not responsible, such as natural or human-made disasters

◆ Limitations of Liability

- Yaskawa shall in no event be responsible for any damage or loss of opportunity to the customer that arises due to failure of the delivered product.
- Yaskawa shall not be responsible for any programs (including parameter settings) or the results of program execution of the programs provided by the user or by a third party for use with programmable Yaskawa products.
- The information described in product catalogs or manuals is provided for the purpose of the customer purchasing the appropriate product for the intended application. The use thereof does not guarantee that there are no infringements of intellectual property rights or other proprietary rights of Yaskawa or third parties, nor does it construe a license.
- Yaskawa shall not be responsible for any damage arising from infringements of intellectual property rights or other proprietary rights of third parties as a result of using the information described in catalogs or manuals.

◆ Suitability for Use

- It is the customer's responsibility to confirm conformity with any standards, codes, or regulations that apply if the Yaskawa product is used in combination with any other products.
- The customer must confirm that the Yaskawa product is suitable for the systems, machines, and equipment used by the customer.
- Consult with Yaskawa to determine whether use in the following applications is acceptable. If use in the application is acceptable, use the product with extra allowance in ratings and specifications, and provide safety measures to minimize hazards in the event of failure.
  - Outdoor use, use involving potential chemical contamination or electrical interference, or use in conditions or environments not described in product catalogs or manuals
  - Nuclear energy control systems, combustion systems, railroad systems, aviation systems, vehicle systems, medical equipment, amusement machines, and installations subject to separate industry or government regulations
  - Systems, machines, and equipment that may present a risk to life or property
  - Systems that require a high degree of reliability, such as systems that supply gas, water, or electricity, or systems that operate continuously 24 hours a day
  - Other systems that require a similar high degree of safety
- Never use the product for an application involving serious risk to life or property without first ensuring that the system is designed to secure the required level of safety with risk warnings and redundancy, and that the Yaskawa product is properly rated and installed.
- The circuit examples and other application examples described in product catalogs and manuals are for reference. Check the functionality and safety of the actual devices and equipment to be used before using the product.
- Read and understand all use prohibitions and precautions, and operate the Yaskawa product correctly to prevent accidental harm to third parties.

◆ Specifications Change

The names, specifications, appearance, and accessories of products in product catalogs and manuals may be changed at any time based on improvements and other reasons. The next editions of the revised catalogs or manuals will be published with updated code numbers. Consult with your Yaskawa representative to confirm the actual specifications before purchasing a product.

Compliance with UL Standards, EU Directives, UK Regulations, and Other Safety Standards

Certification marks for the standards for which the product has been certified by certification bodies are shown on nameplate. Products that do not have the marks are not certified for the standards.

Refer to the Servomotor manual for compliant standards of Servomotors.

◆ North American Safety Standards (UL)

Product	Model	North American Safety Standards (UL File No.)
SERVOPACKs	SGD7S	UL 61800-5-1 (E147823) CSA C22.2 No.274

◆ EU Directives

Product	Model	EU Directives	Harmonized Standards
SERVOPACKs	SGD7S	Machinery Directive 2006/42/EC	EN ISO13849-1: 2015 EN 62061 EN 61800-5-2
		EMC Directive 2014/30/EU	EN 55011 group 1, class A EN 61000-6-2 EN 61000-6-4 EN 61800-3 (Category C2, Second environment)
		Low Voltage Directive 2014/35/EU	EN 61800-5-1
		RoHS Directive 2011/65/EU (EU)2015/863	EN IEC 63000

Note: 1. We declared the CE Marking based on the harmonized standards in the above table.
2. These products are for industrial use. In home environments, these products may cause electromagnetic interference and additional noise reduction measures may be necessary.

◆ UK Conformity Assessed (UKCA)

Product	Model	UK Regulations	Designated Standards
SERVOPACKs	SGD7S	Supply of Machinery (Safety) Regulations S.I. 2008/1597	EN ISO13849-1: 2015 EN 62061 EN 61800-5-2
		Electromagnetic Compatibility Regulations S.I. 2016/1091	EN 55011 group 1, class A EN 61000-6-2 EN 61000-6-4 EN 61800-3 (Category C2, Second environment)
		Electrical Equipment (Safety) Regulations S.I. 2016/1101	EN 61800-5-1
		Restriction of the Use of Certain Hazardous Substances in Electrical and Electronic Equipment Regulations S.I. 2012/3032	EN IEC 63000

Note: We declared the UKCA marking based on the designated standards in the above table.

◆ Safety Standards

Product	Model	Safety Standards	Standards
SERVOPACKs	SGD7S	Safety of Machinery	EN ISO13849-1: 2015 EN 60204-1
		Functional Safety	EN 61508 series EN 62061 EN 61800-5-2
		Functional Safety EMC	EN 61326-3-1 EN 61000-6-7

■ Safety Parameters

Item	Standards	Performance Level	
Safety Integrity Level	IEC 61508	SIL3	
	IEC 62061	SILCL3	
Mission Time	IEC 61508	10 years	20 years
Probability of Dangerous Failure per Hour	IEC 61508 IEC 62061	PFH = 4.04×10^{-9} [1/h] (4.04% of SIL3)	PFH = 4.05×10^{-9} [1/h] (4.05% of SIL3)
Performance Level	EN ISO 13849-1	PLe (Category 3)	
Mean Time to Dangerous Failure of Each Channel	EN ISO 13849-1	MTTFd: High	
Average Diagnostic Coverage	EN ISO 13849-1	DCavg: Medium	
Stop Category	IEC 60204-1	Stop category 0	
Safety Function	IEC 61800-5-2	STO	
Hardware Fault Tolerance	IEC 61508	HFT = 1	
Subsystem	IEC 61508	B	

Contents

About this Manual iii
Outline of Manual iii
Related Documents iv
Using This Manual xi
Safety Precautions xiv
Warranty xxiv
Compliance with UL Standards, EU Directives, UK Regulations,
and Other Safety Standards xxvi

1 Basic Information on SERVOPACKs

1.1 The Σ-7 Series 1-2

1.2 Interpreting the Nameplate 1-3

1.3 Part Names 1-4

1.4 Model Designations 1-6
1.4.1 Interpreting SERVOPACK Model Numbers 1-6
1.4.2 Interpreting Servomotor Model Numbers 1-7

1.5 Combinations of SERVOPACKs and Servomotors 1-9
1.5.1 Combinations of Rotary Servomotors and SERVOPACKs 1-9
1.5.2 Combinations of Direct Drive Servomotors and SERVOPACKs 1-10
1.5.3 Combinations of Linear Servomotors and SERVOPACKs 1-11

1.6 Functions 1-13

2 Selecting a SERVOPACK

2.1 Ratings and Specifications 2-2
2.1.1 Ratings 2-2
2.1.2 SERVOPACK Overload Protection Characteristics 2-6
2.1.3 Specifications 2-7

2.2 Block Diagrams 2-12
2.2.1 SGD7S-R70A, -R90A, and -1R6A 2-12
2.2.2 SGD7S-2R8A 2-12
2.2.3 SGD7S-3R8A, -5R5A, and -7R6A 2-13
2.2.4 SGD7S-120A 2-14
2.2.5 SGD7S-180A and -200A 2-15
2.2.6 SGD7S-330A 2-16
2.2.7 SGD7S-470A and -550A 2-17
2.2.8 SGD7S-590A and -780A 2-18
2.2.9 SGD7S-R70F, -R90F, and -2R1F 2-18
2.2.10 SGD7S-2R8F 2-19

2.3 External Dimensions 2-20
2.3.1 Front Cover Dimensions and Connector Specifications 2-20
2.3.2 SERVOPACK External Dimensions 2-21

2.4 Examples of Standard Connections between SERVOPACKs and Peripheral Devices . . 2-27

3 SERVOPACK Installation

3.1 Installation Precautions 3-2
3.2 Mounting Types and Orientation 3-3
3.3 Mounting Hole Dimensions 3-4
3.4 Mounting Interval 3-6
3.4.1 Installing One SERVOPACK in a Control Panel 3-6
3.4.2 Installing More Than One SERVOPACK in a Control Panel 3-6
3.5 Monitoring the Installation Environment 3-7
3.6 Derating Specifications 3-8
3.7 EMC Installation Conditions 3-9

4 Wiring and Connecting SERVOPACKs

4.1 Wiring and Connecting SERVOPACKs 4-3
4.1.1 General Precautions 4-3
4.1.2 Countermeasures against Noise 4-5
4.1.3 Grounding 4-8
4.2 Basic Wiring Diagrams 4-9
4.3 Wiring the Power Supply to the SERVOPACK 4-11
4.3.1 Terminal Symbols and Terminal Names 4-11
4.3.2 Wiring Procedure for Main Circuit Connector 4-14
4.3.3 Power ON Sequence 4-15
4.3.4 Power Supply Wiring Diagrams 4-16
4.3.5 Wiring Regenerative Resistors 4-22
4.3.6 Wiring Reactors for Harmonic Suppression 4-24
4.4 Wiring Servomotors 4-25
4.4.1 Terminal Symbols and Terminal Names 4-25
4.4.2 Pin Arrangement of Encoder Connector (CN2) 4-25
4.4.3 Wiring the SERVOPACK to the Encoder 4-26
4.4.4 Wiring the SERVOPACK to the Holding Brake 4-34
4.5 I/O Signal Connections 4-35
4.5.1 I/O Signal Connector (CN1) Names and Functions 4-35
4.5.2 I/O Signal Connector (CN1) Pin Arrangement 4-38
4.5.3 I/O Signal Wiring Examples 4-39
4.5.4 I/O Circuits 4-45
4.6 Connecting Safety Function Signals 4-50
4.6.1 Pin Arrangement of Safety Function Signals (CN8) 4-50
4.6.2 I/O Circuits 4-50

4.7 Connecting the Other Connectors 4-52
4.7.1 Serial Communications Connector (CN3) 4-52
4.7.2 Computer Connector (CN7) 4-52
4.7.3 Analog Monitor Connector (CN5) 4-52

5 Basic Functions That Require Setting before Operation

5.1 Manipulating Parameters (Pn□□□). 5-4
5.1.1 Parameter Classification. 5-4
5.1.2 Notation for Parameters 5-5
5.1.3 Parameter Setting Methods 5-6
5.1.4 Write Prohibition Setting for Parameters. 5-8
5.1.5 Initializing Parameter Settings 5-11

5.2 Control Method Selection 5-13

5.3 Power Supply Type Settings for the Main Circuit and Control Circuit. . 5-14
5.3.1 AC Power Supply Input/DC Power Supply Input Setting 5-14
5.3.2 Single-phase AC Power Supply Input/
Three-phase AC Power Supply Input Setting 5-15

5.4 Automatic Detection of Connected Motor 5-16

5.5 Functions and Settings for the /S-ON (Servo ON) Signal 5-17
5.5.1 Function of the /S-ON (Servo ON) Signal 5-17
5.5.2 Setting to Keep the Servo ON and Supply Power to
the Motor Continuously 5-17

5.6 Motor Direction Setting 5-18

5.7 Setting the Linear Encoder Pitch 5-19

5.8 Writing Linear Servomotor Parameters 5-20

5.9 Selecting the Phase Sequence for a Linear Servomotor 5-24

5.10 Polarity Sensor Setting. 5-26

5.11 Polarity Detection. 5-27
5.11.1 Restrictions 5-27
5.11.2 Using the /S-ON (Servo ON) Signal to Perform Polarity Detection 5-28
5.11.3 Using the /P-DET (Polarity Detection) Signal to Perform Polarity
Detection 5-29
5.11.4 Using a Tool Function to Perform Polarity Detection. 5-30

5.12 Overtravel and Related Settings 5-31
5.12.1 Overtravel Signals 5-32
5.12.2 Setting to Enable/Disable Overtravel 5-32
5.12.3 Motor Stopping Method for Overtravel 5-33
5.12.4 Overtravel Warnings 5-34

5.13 Holding Brake 5-36
5.13.1 Brake Operating Sequence 5-36
5.13.2 /BK (Brake) Signal 5-37
5.13.3 Output Timing of /BK (Brake) Signal When the Servomotor Is Stopped . . . 5-38
5.13.4 Output Timing of /BK (Brake) Signal When the Servomotor Is Operating . . 5-39

5.14 Motor Stopping Methods for Servo OFF and Alarms 5-41
5.14.1 Stopping Method for Servo OFF 5-42
5.14.2 Servomotor Stopping Method for Alarms 5-42

5.15 Motor Overload Detection Level 5-44
5.15.1 Detection Timing for Overload Warnings (A.910) 5-44
5.15.2 Detection Timing for Overload Alarms (A.720) 5-45

5.16 Electronic Gear Settings 5-46
5.16.1 Electronic Gear Ratio Settings 5-47
5.16.2 Electronic Gear Ratio Setting Examples 5-51

5.17 Resetting the Absolute Encoder 5-52
5.17.1 Precautions on Resetting 5-52
5.17.2 Preparations 5-52
5.17.3 Applicable Tools 5-53
5.17.4 Operating Procedure 5-53

5.18 Setting the Origin of the Absolute Encoder 5-55
5.18.1 Setting the Origin of the Absolute Linear Encoder 5-55

5.19 Setting the Regenerative Resistor Capacity 5-58

6 Application Functions

6.1 I/O Signal Allocations 6-5
6.1.1 Input Signal Allocations 6-5
6.1.2 Output Signal Allocations 6-8
6.1.3 ALM (Servo Alarm) Signal 6-9
6.1.4 ALO1 to ALO3 (Alarm Code) Signals 6-10
6.1.5 /WARN (Warning) Signal 6-10
6.1.6 /TGON (Rotation Detection) Signal 6-11
6.1.7 /S-RDY (Servo Ready) Signal 6-12

6.2 Operation for Momentary Power Interruptions 6-13

6.3 SEMI F47 Function 6-14

6.4 Setting the Motor Maximum Speed 6-16

6.5 Speed Control 6-17
6.5.1 Basic Settings for Speed Control 6-17
6.5.2 Soft Start Settings 6-24
6.5.3 Speed Reference Filter 6-24
6.5.4 Zero Clamping 6-25
6.5.5 /V-CMP (Speed Coincidence Detection) Signal 6-27
6.5.6 Operation Examples for Changing the Motor Direction 6-28

6.6 Position Control 6-30
6.6.1 Basic Settings for Position Control 6-31
6.6.2 CLR (Position Deviation Clear) Signal Function and Settings 6-33
6.6.3 Reference Pulse Input Multiplication Switching 6-34
6.6.4 Smoothing Settings 6-35
6.6.5 /COIN (Positioning Completion) Signal 6-37
6.6.6 /NEAR (Near) Signal 6-38
6.6.7 Reference Pulse Inhibition Function 6-39

6.7 Torque Control 6-40
6.7.1 Basic Settings for Torque Control 6-40
6.7.2 Adjusting the Torque Reference Offset 6-41
6.7.3 Torque Reference Filter Settings 6-45
6.7.4 Speed Limit during Torque Control 6-45

6.8 Encoder Divided Pulse Output 6-48
6.8.1 Encoder Divided Pulse Output Signals 6-48
6.8.2 Setting for the Encoder Divided Pulse Output 6-53

6.9 Internal Set Speed Control 6-55
6.9.1 Input Signals for Internal Set Speed Control 6-55
6.9.2 Setting the Control Method to Internal Set Speed Control 6-56
6.9.3 Settings for Internal Set Speed Control 6-56
6.9.4 Changing Internal Set Speeds with Input Signals 6-57

6.10 Selecting Combined Control Methods 6-59
6.10.1 Setting Pn000 = n.□□X□ (Control Method Selection) to 4, 5, or 6 6-59
6.10.2 Setting Pn000 = n.□□X□ (Control Method Selection) to 7, 8, or 9 6-62
6.10.3 Setting Pn000 = n.□□X□ (Control Method Selection) to A or B 6-62

6.11 Selecting Torque Limits 6-64
6.11.1 Internal Torque Limits 6-64
6.11.2 External Torque Limits 6-65
6.11.3 Limiting Torque with an Analog Reference 6-68
6.11.4 Limiting Torque with an External Torque Limit and an Analog Voltage Reference 6-70
6.11.5 /CLT (Torque Limit Detection) Signal 6-73

6.12 Absolute Encoders 6-74
6.12.1 Connecting an Absolute Encoder 6-75
6.12.2 Structure of the Position Data of the Absolute Encoder 6-75
6.12.3 Output Ports for the Position Data from the Absolute Encoder 6-76
6.12.4 Reading the Position Data from the Absolute Encoder 6-77
6.12.5 Transmission Specifications 6-81
6.12.6 Calculating the Current Position in Machine Coordinates 6-82
6.12.7 Alarm Output from Output Ports for the Position Data from the Absolute Encoder 6-83
6.12.8 Multiturn Limit Setting 6-83
6.12.9 Multiturn Limit Disagreement Alarm (A.CC0) 6-85

6.13 Absolute Linear Encoders 6-88
6.13.1 Connecting an Absolute Linear Encoder 6-88
6.13.2 Structure of the Position Data of the Absolute Linear Encoder 6-88
6.13.3 Output Ports for the Position Data from the Absolute Linear Encoder 6-89
6.13.4 Reading the Position Data from the Absolute Linear Encoder 6-90
6.13.5 Transmission Specifications 6-94
6.13.6 Calculating the Current Position in Machine Coordinates 6-95
6.13.7 Alarm Output from the Output Ports for the Position Data from the Absolute Linear Encoder 6-96

6.14 Software Reset 6-97
6.14.1 Preparations 6-97
6.14.2 Applicable Tools 6-97
6.14.3 Operating Procedure 6-97

6.15 Initializing the Vibration Detection Level 6-99
6.15.1 Preparations 6-99
6.15.2 Applicable Tools 6-100
6.15.3 Operating Procedure 6-100
6.15.4 Related Parameters 6-102

6.16 Adjusting the Motor Current Detection Signal Offset 6-103
6.16.1 Automatic Adjustment 6-103
6.16.2 Manual Adjustment 6-105

6.17 Forcing the Motor to Stop 6-107
6.17.1 FSTP (Forced Stop Input) Signal 6-107
6.17.2 Stopping Method Selection for Forced Stops 6-107
6.17.3 Resetting Method for Forced Stops 6-109

6.18 Overheat Protection 6-110
6.18.1 Connecting the Overheat Protection Input (TH) Signal 6-110
6.18.2 Overheat Protection Selection 6-111

7 Trial Operation and Actual Operation

7.1 Flow of Trial Operation 7-2
7.1.1 Flow of Trial Operation for Rotary Servomotors 7-2
7.1.2 Flow of Trial Operation for Linear Servomotors 7-4

7.2 Inspections and Confirmations before Trial Operation 7-6

7.3 Trial Operation for the Servomotor without a Load 7-7
7.3.1 Preparations 7-7
7.3.2 Applicable Tools 7-8
7.3.3 Operating Procedure 7-8

7.4 Trial Operation from the Host Controller for the Servomotor without a Load . . 7-10
7.4.1 Preparing the Servomotor for Trial Operation 7-11
7.4.2 Trial Operation for Speed Control 7-13
7.4.3 Trial Operation for Position Control from the Host Controller with the SERVOPACK Used for Speed Control 7-14
7.4.4 Trial Operation for Position Control 7-15

7.5 Trial Operation with the Servomotor Connected to the Machine. . 7-17
7.5.1 Precautions 7-17
7.5.2 Preparations 7-18
7.5.3 Operating Procedure 7-18

7.6 Convenient Function to Use during Trial Operation 7-20
7.6.1 Program Jogging 7-20
7.6.2 Origin Search 7-25
7.6.3 Test without a Motor 7-27

8 Tuning

8.1 Overview and Flow of Tuning 8-4

8.1.1 Tuning Functions 8-5
8.1.2 Diagnostic Tool 8-6

8.2 Monitoring Methods 8-7

8.3 Precautions to Ensure Safe Tuning 8-8

8.3.1 Overtravel Settings 8-8
8.3.2 Torque Limit Settings 8-8
8.3.3 Setting the Position Deviation Overflow Alarm Level 8-8
8.3.4 Vibration Detection Level Setting 8-10
8.3.5 Setting the Position Deviation Overflow Alarm Level at Servo ON 8-10

8.4 Tuning-less Function 8-12

8.4.1 Application Restrictions 8-12
8.4.2 Operating Procedure 8-13
8.4.3 Troubleshooting Alarms 8-14
8.4.4 Parameters Disabled by Tuning-less Function 8-15
8.4.5 Automatically Adjusted Function Setting 8-15
8.4.6 Related Parameters 8-15

8.5 Estimating the Moment of Inertia 8-16

8.5.1 Outline 8-16
8.5.2 Restrictions 8-17
8.5.3 Applicable Tools 8-17
8.5.4 Operating Procedure 8-18

8.6 Autotuning without Host Reference 8-24

8.6.1 Outline 8-24
8.6.2 Restrictions 8-25
8.6.3 Applicable Tools 8-26
8.6.4 Operating Procedure 8-26
8.6.5 Troubleshooting Problems in Autotuning without a Host Reference 8-31
8.6.6 Automatically Adjusted Function Settings 8-32
8.6.7 Related Parameters 8-34

8.7 Autotuning with a Host Reference 8-35

8.7.1 Outline 8-35
8.7.2 Restrictions 8-35
8.7.3 Applicable Tools 8-36
8.7.4 Operating Procedure 8-36
8.7.5 Troubleshooting Problems in Autotuning with a Host Reference 8-40
8.7.6 Automatically Adjusted Function Settings 8-41
8.7.7 Related Parameters 8-41

8.8 Custom Tuning 8-42

8.8.1 Outline 8-42
8.8.2 Preparations 8-42
8.8.3 Applicable Tools 8-43
8.8.4 Operating Procedure 8-43
8.8.5 Automatically Adjusted Function Settings 8-49
8.8.6 Tuning Example for Tuning Mode 2 or 3 8-49
8.8.7 Related Parameters 8-50

8.9 Anti-Resonance Control Adjustment 8-51
8.9.1 Outline 8-51
8.9.2 Preparations 8-51
8.9.3 Applicable Tools 8-52
8.9.4 Operating Procedure 8-52
8.9.5 Related Parameters 8-54
8.9.6 Suppressing Different Vibration Frequencies with Anti-resonance Control 8-54

8.10 Vibration Suppression 8-56
8.10.1 Outline 8-56
8.10.2 Preparations 8-57
8.10.3 Applicable Tools 8-57
8.10.4 Operating Procedure 8-57
8.10.5 Setting Combined Functions 8-59
8.10.6 Related Parameters 8-59

8.11 Speed Ripple Compensation 8-60
8.11.1 Outline 8-60
8.11.2 Setting Up Speed Ripple Compensation 8-60
8.11.3 Setting Parameters 8-64

8.12 Additional Adjustment Functions 8-66
8.12.1 Gain Switching 8-66
8.12.2 Friction Compensation 8-70
8.12.3 Gravity Compensation 8-71
8.12.4 Current Control Mode Selection 8-73
8.12.5 Current Gain Level Setting 8-73
8.12.6 Speed Detection Method Selection 8-74
8.12.7 Speed Feedback Filter 8-74
8.12.8 Proportional Control (P Control) 8-74

8.13 Manual Tuning 8-76
8.13.1 Tuning the Servo Gains 8-76
8.13.2 Compatible Adjustment Functions 8-87

8.14 Diagnostic Tools 8-93
8.14.1 Mechanical Analysis 8-93
8.14.2 Easy FFT 8-95

9 Monitoring

9.1 Monitoring Product Information 9-2
9.1.1 Items That You Can Monitor 9-2
9.1.2 Operating Procedures 9-3

9.2 Monitoring SERVOPACK Status 9-4
9.2.1 Servo Drive Status 9-4
9.2.2 Monitoring Operation, Status, and I/O 9-4
9.2.3 I/O Signals Status Monitor 9-6

9.3 Monitoring Machine Operation Status and Signal Waveforms . . 9-8
9.3.1 Items That You Can Monitor 9-8
9.3.2 Using the SigmaWin+ 9-9
9.3.3 Using the Analog Monitors 9-10

9.4 Monitoring Product Life 9-15
9.4.1 Items That You Can Monitor 9-15
9.4.2 Operating Procedure 9-16
9.4.3 Preventative Maintenance 9-17

9.5 Alarm Tracing 9-18
9.5.1 Data for Which Alarm Tracing Is Performed 9-18
9.5.2 Applicable Tools 9-18

10 Fully-Closed Loop Control

10.1 Fully-Closed System 10-2

10.2 SERVOPACK Commissioning Procedure 10-3

10.3 Parameter Settings for Fully-Closed Loop Control 10-5
10.3.1 Control Block Diagram for Fully-Closed Loop Control 10-5
10.3.2 Setting the Motor Direction and the Machine Movement Direction 10-6
10.3.3 Setting the Number of External Encoder Scale Pitches 10-7
10.3.4 Setting the PAO, PBO, and PCO (Encoder Divided Pulse Output) Signals . . 10-7
10.3.5 External Absolute Encoder Data Reception Sequence 10-8
10.3.6 Electronic Gear Setting 10-8
10.3.7 Alarm Detection Settings 10-8
10.3.8 Analog Monitor Signal Settings 10-10
10.3.9 Setting to Use an External Encoder for Speed Feedback 10-10

11 Safety Functions

11.1 Introduction to the Safety Functions 11-3
11.1.1 Safety Functions 11-3
11.1.2 Precautions for Safety Functions 11-3

11.2 Hard Wire Base Block (HWBB) 11-4
11.2.1 Risk Assessment 11-4
11.2.2 Hard Wire Base Block (HWBB) State 11-5
11.2.3 Resetting the HWBB State 11-5
11.2.4 Detecting Errors in HWBB Signal 11-6
11.2.5 HWBB Input Signal Specifications 11-6
11.2.6 Operation without a Host Controller 11-6
11.2.7 /S-RDY (Servo Ready Output) Signal 11-7
11.2.8 /BK (Brake Output) Signal 11-7
11.2.9 Stopping Methods 11-7
11.2.10 Settings to Clear the Position Deviation 11-8
11.2.11 ALM (Servo Alarm) Signal and ALO1, ALO2, and ALO3 (Alarm Code Output) Signals 11-8

11.3 EDM1 (External Device Monitor) 11-9
11.3.1 EDM1 Output Signal Specifications 11-9

11.4 Applications Examples for Safety Functions 11-10
11.4.1 Connection Example 11-10
11.4.2 Failure Detection Method 11-10
11.4.3 Procedure 11-11

11.5 Validating Safety Functions 11-12

11.6 Connecting a Safety Function Device 11-13

12 Maintenance

12.1 Inspections and Part Replacement 12-2
12.1.1 Inspections 12-2
12.1.2 Guidelines for Part Replacement 12-2
12.1.3 Replacing the Battery 12-3

12.2 Alarm Displays 12-5
12.2.1 List of Alarms 12-5
12.2.2 Troubleshooting Alarms 12-12
12.2.3 Resetting Alarms 12-41
12.2.4 Displaying the Alarm History 12-42
12.2.5 Clearing the Alarm History 12-43
12.2.6 Resetting Alarms Detected in Option Modules 12-44
12.2.7 Resetting Motor Type Alarms 12-46

12.3 Warning Displays 12-48
12.3.1 List of Warnings 12-48
12.3.2 Troubleshooting Warnings 12-50

12.4 Troubleshooting Based on the Operation and Conditions of the Servomotor . . 12-56

13 Panel Displays and Panel Operator Procedures

13.1 Panel Operator 13-3
13.1.1 Panel Operator Key Names and Functions 13-3
13.1.2 Changing Modes 13-3
13.1.3 Status Displays 13-4

13.2 Parameter (Pn□□□) Operations on the Panel Operator 13-6
13.2.1 Setting Parameters That Require Numeric Settings 13-6
13.2.2 Setting Parameters That Require Selection of Functions 13-7

13.3 Monitor Display (Un□□□) Operations on the Panel Operator . . 13-8
13.3.1 Basic Monitor Display Operations 13-8
13.3.2 Input Signal Monitor (Un005) 13-8
13.3.3 Output Signal Monitor (Un006) 13-9
13.3.4 Safety Input Signal Monitor (Un015) 13-10
13.3.5 Upper Limit Setting Monitor for Maximum Motor Speed/
Upper Limit Setting for Encoder Output Resolution (Un010) 13-11
13.3.6 Polarity Sensor Signal Monitor (Un011) 13-11

13.4 Utility Function (Fn□□□) Operations on the Panel Operator . . 13-12
13.4.1 Display Alarm History (Fn000) 13-12
13.4.2 Jog (Fn002) 13-13
13.4.3 Origin Search (Fn003) 13-14
13.4.4 Jog Program (Fn004) 13-15
13.4.5 Initialize Parameters (Fn005) 13-16
13.4.6 Clear Alarm History (Fn006) 13-16
13.4.7 Reset Absolute Encoder (Fn008) 13-17
13.4.8 Autotune Analog (Speed/Torque) Reference Offset (Fn009) 13-18
13.4.9 Manually Adjust Speed Reference Offset (Fn00A) 13-18
13.4.10 Manually Adjust Torque Reference Offset (Fn00B) 13-19
13.4.11 Adjust Analog Monitor Output Offset (Fn00C) 13-20
13.4.12 Adjust Analog Monitor Output Gain (Fn00D) 13-20
13.4.13 Autotune Motor Current Detection Signal Offset (Fn00E) 13-21
13.4.14 Manually Adjust Motor Current Detection Signal Offset (Fn00F) 13-22
13.4.15 Write Prohibition Setting (Fn010) 13-23
13.4.16 Display Servomotor Model (Fn011) 13-24
13.4.17 Display Software Version (Fn012) 13-26
13.4.18 Multiturn Limit Setting after Multiturn Limit Disagreement Alarm (Fn013) . . 13-26
13.4.19 Reset Option Module Configuration Error (Fn014) 13-27
13.4.20 Initialize Vibration Detection Level (Fn01B) 13-27
13.4.21 Display SERVOPACK and Servomotor IDs (Fn01E) 13-28
13.4.22 Display Servomotor ID from Feedback Option Module (Fn01F) 13-28
13.4.23 Set Absolute Linear Encoder Origin (Fn020) 13-28
13.4.24 Resetting Motor Type Alarms (Fn021) 13-29
13.4.25 Software Reset (Fn030) 13-29
13.4.26 Polarity Detection (Fn080) 13-29
13.4.27 Tuning-less Level Setting (Fn200) 13-30
13.4.28 Advanced Autotuning without Reference (Fn201) 13-31
13.4.29 Advanced Autotuning with Reference (Fn202) 13-31
13.4.30 One-Parameter Tuning (Fn203) 13-31
13.4.31 Adjust Anti-resonance Control (Fn204) 13-32
13.4.32 Vibration Suppression (Fn205) 13-32
13.4.33 Easy FFT (Fn206) 13-32

14 Parameter Lists

14.1 List of Parameters 14-2
14.1.1 Interpreting the Parameter Lists 14-2
14.1.2 List of Parameters 14-3
14.2 Parameter Recording Table 14-34

15 Appendices

15.1 Examples of Connections to Host Controllers 15-2

15.1.1 Example of Connections to MP2000/MP3000-Series SVA-01 Motion Module . . 15-2
15.1.2 Example of Connections to Yokogawa Electric's F3YP2□-0P Positioning Module for Position Control 15-3
15.1.3 Example of Connections to Yokogawa Electric's F3NC3□-0N Positioning Module for Position Control 15-4
15.1.4 Example of Connections to an OMRON Position Control Unit 15-5
15.1.5 Example of Connection to Mitsubishi's QD75D□ Positioning Module for Position Control. 15-6

15.2 Corresponding SERVOPACK and SigmaWin+ Function Names . . 15-7

15.2.1 Corresponding SERVOPACK Utility Function Names. 15-7
15.2.2 Corresponding SERVOPACK Monitor Display Function Names 15-9

Index

Revision History

Basic Information on SERVOPACKs

1

This chapter provides information required to select SERVOPACKs, such as SERVOPACK models and combinations with Servomotors.

1.1 The Σ-7 Series 1-2

1.2 Interpreting the Nameplate 1-3

1.3 Part Names 1-4

1.4 Model Designations 1-6

1.4.1 Interpreting SERVOPACK Model Numbers 1-6
1.4.2 Interpreting Servomotor Model Numbers 1-7

1.5 Combinations of SERVOPACKs and Servomotors . . 1-9

1.5.1 Combinations of Rotary Servomotors and SERVOPACKs 1-9
1.5.2 Combinations of Direct Drive Servomotors and SERVOPACKs 1-10
1.5.3 Combinations of Linear Servomotors and SERVOPACKs 1-11

1.6 Functions 1-13

1.1 The Σ-7 Series

The Σ-7-series SERVOPACKs are designed for applications that require frequent high-speed and high-precision positioning. The SERVOPACK will make the most of machine performance in the shortest time possible, thus contributing to improving productivity.

The following three types of Σ-7-Series Servo Drives are available.

Type	Description
Σ-7S	Single-axis SERVOPACKs
Σ-7W	Two-axis SERVOPACKs
Σ-7C	Two-axis SERVOPACKs with Built-in Controllers

1.2 Interpreting the Nameplate

The following basic information is provided on the nameplate.

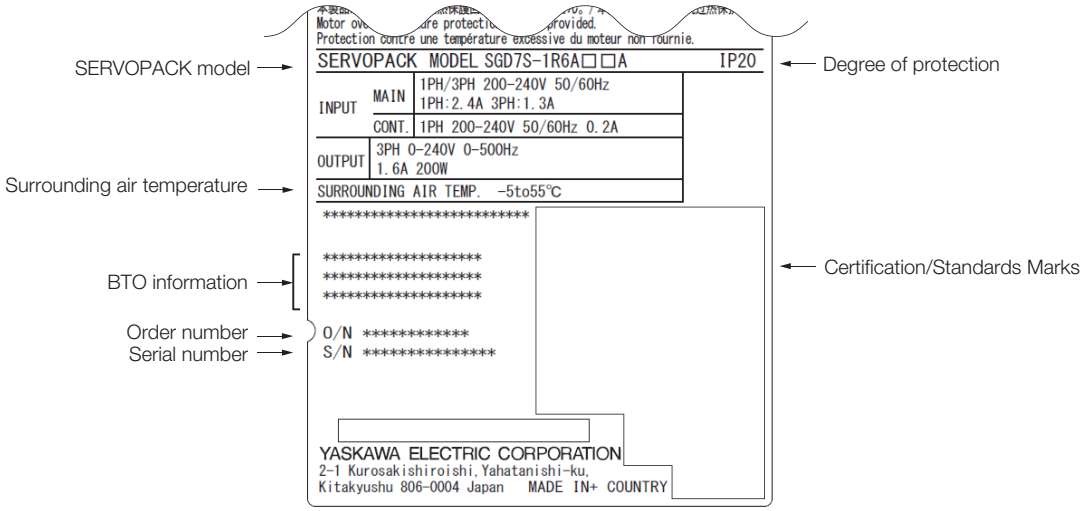

1.3 Part Names

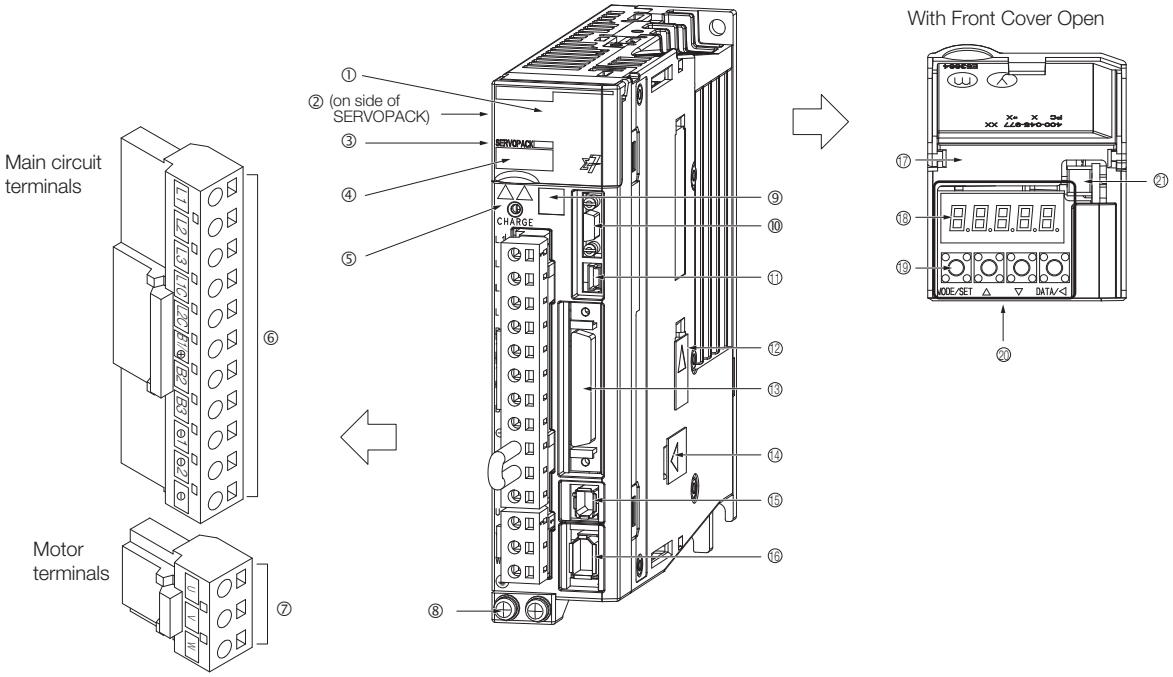

No.	Name	Description	Reference
①	Front Cover	–	–
②	Nameplate	Indicates the SERVOPACK model and ratings.	page 1-3
③	Input Voltage	–	–
④	Model	The model of the SERVOPACK.	page 1-6
⑤	CHARGE	Lit while the main circuit power is being supplied. Note: Even if you turn OFF the main circuit power supply, this indicator will be lit as long as the internal capacitor remains charged. Do not touch the main circuit or motor terminals while this indicator is lit. Doing so may result in electric shock.	–
⑥	Main Circuit Terminals	The terminals depend on the main circuit power supply input specifications of the SERVOPACK.	page 4-11
⑦	Servomotor Terminals (U, V, and W)	The connection terminals for the Servomotor Main Circuit Cable (power line).	page 4-25
⑧	Ground Terminal (⏚)	The ground terminals to prevent electric shock. Always connect this terminal.	–
⑨	QR Code	The QR code that is used by the MechatroCloud service.	–
⑩	Serial Communications Connector (CN3)	Connects to the Digital Operator (a peripheral device) or a computer (RS-422).	page 4-52
⑪	Computer Connector (CN7)	A USB connector to connect a computer.	page 4-52
⑫	Safety Option Module Connector	Connects to a Safety Option Module.	–
⑬	I/O Signal Connector (CN1)	Connects to reference input signals and sequence I/O signals.	page 4-35
⑭	Feedback Option Module Connector	Connects to a Feedback Option Module.	–
⑮	Safety Connector (CN8)	Connects to a safety function device.	page 4-50
⑯	Encoder Connector (CN2)	• Rotary Servomotor: Connects to the encoder in the Servomotor. • Linear Servomotor: Connects to a Serial Converter Unit or linear encoder.	page 4-25
⑰	Serial Number	–	–

Continued on next page.

Continued from previous page.

No.	Name	Description	Reference
⑱	Panel Display	Used to display SERVOPACK status, alarm numbers, and parameters.	page 13-3
⑲	Panel Operator Keys	Used to set parameters.	
⑳	Panel Operator	–	
㉑	Analog Monitor Connector (CN5)	You can use a special cable (peripheral device) to monitor the motor speed, torque reference, or other values.	page 4-52

1.4 Model Designations

1.4.1 Interpreting SERVOPACK Model Numbers

SGD7S	-	R70	A	00	A	001	000	B
Σ-7-Series Σ-7S SERVOPACKs		1st+2nd+3rd digits	4th digit	5th+6th digits	7th digit	8th+9th+10th digits	11th+12th+13th digits	14th digit

1st+2nd+3rd digits Maximum Applicable Motor Capacity

Voltage	Code	Specification
Three-Phase, 200 VAC	R70*1	0.05 kW
	R90*1	0.1 kW
	1R6*1	0.2 kW
	2R8*1	0.4 kW
	3R8	0.5 kW
	5R5*1	0.75 kW
	7R6	1.0 kW
	120*2	1.5 kW
	180	2.0 kW
	200	3.0 kW
	330	5.0 kW
	470	6.0 kW
	550	7.5 kW
	590	11 kW
	780	15 kW
Single-Phase, 100 VAC	R70	0.05 kW
	R90	0.1 kW
	2R1	0.2 kW
	2R8	0.4 kW

4th digit Voltage

Code	Specification
A	200 VAC
F	100 VAC

5th+6th digits Interface*3

Code	Specification
00	Analog voltage/pulse train reference

7th digit Design Revision Order

A

8th+9th+10th digits Hardware Options Specification

Code	Specification	Applicable Models
None	Without options	All models
000		
001	Rack-mounted	SGD7S-R70A to -330A
		SGD7S-R70F to -2R8F
	Duct-ventilated	SGD7S-470A to -780A
002	Varnished	All models
008	Single-phase, 200-VAC power supply input	SGD7S-120A
020*4	No dynamic brake	SGD7S-R70A to -2R8A
		SGD7S-R70F to -2R8F
	External dynamic brake resistor	SGD7S-3R8A to -780A

11th+12th+13th digits FT/EX Specification

Code	Specification
None	None
000	

14th digit BTO Specification*5

Code	Specification
None	None
B	BTO specification

*1. You can use these models with either a single-phase or three-phase input.
*2. A model with a single-phase, 200-VAC power supply input is available as a hardware option (model: SGD7S-120A00A008).
*3. The same SERVOPACKs are used for both Rotary Servomotors and Linear Servomotors.
*4. Refer to the following manual for details.
Σ-7-Series Σ-7S/Σ-7W SERVOPACK with Dynamic Brake Hardware Option Specifications Product Manual (Manual No.: SIEP S800001 73)
*5. The BTO specification indicates if the SEVOPACK is customized by using the MechatroCloud BTO service.
This service is available in Japan only.
You need a BTO number to order SERVOPACKs with customized specifications.
Refer to the following catalog for details on the BTO specification.
AC Servo Drives Σ-7 Series (Catalog No.: KAEP S800001 23)

1.4.2 Interpreting Servomotor Model Numbers

This section outlines the model numbers of Σ-7-series Servomotors. Refer to the relevant manual in the following list for details.

- Σ-7-Series Rotary Servomotor Product Manual (Manual No.: SIEP S800001 36)
- Σ-7-Series Linear Servomotor Product Manual (Manual No.: SIEP S800001 37)
- Σ-7-Series Direct Drive Servomotor Product Manual (Manual No.: SIEP S800001 38)

Rotary Servomotors

SGM□□ - 01 A F A 2 1

Series | 1st+2nd digits | 3rd digit | 4th digit | 5th digit | 6th digit | 7th digit

Series Σ-7 Series Servomotors

Code	Specification
SGM7M	Low inertia , ultra-small capacity
SGM7J	Medium inertia, high speed
SGM7A	Low inertia, high speed
SGM7P	Medium inertia, flat
SGM7G	Medium inertia, low speed, high torque
SGMMV	Low inertia, ultra-small capacity

1st+2nd digits Rated Output

3rd digit Power Supply Voltage

- 200 VAC

4th digit Serial Encoder Specification

- 17-bit absolute encoder
- 20-bit absolute encoder
- 24-bit batteryless absolute encoder
- 24-bit absolute encoder
- 24-bit incremental encoder

5th digit Design Revision Order

6th digit Shaft End Specification

- Straight
- With key and tap
- With two flat seats

7th digit Option Specification

- With 24-V holding brake
- With oil seal

Direct Drive Servomotors

SGM□□ - 02 B 3 C 1 1

Series | 1st+2nd digits | 3rd digit | 4th digit | 5th digit | 6th digit | 7th digit

Series Σ-7 Series Servomotors

Code	Specification
SGM7E	Small capacity, coreless inner rotor
SGM7F	Small capacity,with core inner rotor
	Medium capacity, with core inner rotor
SGMCV	Small capacity, with core inner rotor
SGMCS	Small capacity, coreless inner rotor
	Medium capacity, with core inner rotor

1st+2nd digits Rated Torque

3rd digit Servomotor Outer Diameter

4th digit Serial Encoder Specification

5th digit Design Revision Order

6th digit Flange Specification

- Cable drawn to load side
- Cable drawn to non-load side

7th digit Option Specification

- High mechanical precision

Linear Servomotors

SGL □ □ - 30 A 050 C P □

Series | 1st digit | 2nd digit | 3rd digit on

Series Σ-7 Series Servomotors

1st digit Servomotor Type

Code	Specification
G	Coreless models
F	Models with F-type iron core
T	Models with T-type iron core

2nd digit Moving Coil/Magnetic Way

Code	Specification
W	Moving Coil
W2	
M	Magnetic Way
M2	

3rd digit on

The specifications for the 3rd digit on depend on the Servomotor type.

1.5 Combinations of SERVOPACKs and Servomotors

1.5.1 Combinations of Rotary Servomotors and SERVOPACKs

Rotary Servomotor Model		Capacity	SERVOPACK Model
			SGD7S-
SGM7M (Low Inertia, Ultra-small Capacity), 3000 min^{-1}	SGM7M-A1A	11 W	R90A or R90F
	SGM7M-A2A	22 W	
	SGM7M-A3A	33 W	1R6A or 2R1F
SGM7J (Medium Inertia, Small Capacity), 3,000 min^{-1}	SGM7J-A5A	50 W	R70A or R70F
	SGM7J-01A	100 W	R90A or R90F
	SGM7J-C2A	150 W	1R6A or 2R1F
	SGM7J-02A	200 W	
	SGM7J-04A	400 W	2R8A or 2R8F
	SGM7J-06A	600 W	5R5A
	SGM7J-08A	750 W	
SGM7A (Low Inertia, Small Capacity), 3,000 min^{-1}	SGM7A-A5A	50 W	R70A or R70F
	SGM7A-01A	100 W	R90A or R90F
	SGM7A-C2A	150 W	1R6A or 2R1F
	SGM7A-02A	200 W	
	SGM7A-04A	400 W	2R8A or 2R8F
	SGM7A-06A	600 W	5R5A
	SGM7A-08A	750 W	
	SGM7A-10A	1.0 kW	120A
	SGM7A-15A	1.5 kW	
	SGM7A-20A	2.0 kW	180A
	SGM7A-25A	2.5 kW	200A
	SGM7A-30A	3.0 kW	
	SGM7A-40A	4.0 kW	330A
	SGM7A-50A	5.0 kW	
	SGM7A-70A	7.0 kW	550A
SGM7P (Medium Inertia, Flat), 3,000 min^{-1}	SGM7P-01A	100 W	R90A or R90F
	SGM7P-02A	200 W	2R8A or 2R1F
	SGM7P-04A	400 W	2R8A or 2R8F
	SGM7P-08A	750 W	5R5A
	SGM7P-15A	1.5 kW	120A
SGM7G (Medium Inertia, Medium Capacity), 1,500 min^{-1}	SGM7G-03A	300 W	3R8A
	SGM7G-05A	450 W	
	SGM7G-09A	850 W	7R6A
	SGM7G-13A	1.3 kW	120A
	SGM7G-20A	1.8 kW	180A
	SGM7G-30A	2.9 kW*1	330A
	SGM7G-44A	4.4 kW	
	SGM7G-55A	5.5 kW	470A
	SGM7G-75A	7.5 kW	550A
	SGM7G-1AA	11 kW	590A
	SGM7G-1EA	15 kW	780A
SGMMV*2 (Low Inertia, Ultra-small Capacity), 3,000 min^{-1}	SGMMV-A1A	10 W	R90A or R90F
	SGMMV-A2A	20 W	
	SGMMV-A3A	30 W	1R6A or 2R1F

*1. 2.4 kW when using the Servomotor with a SGD7S-200A SERVOPACK.
*2. The SGMMV Servomotor is an older model. When purchasing a new Servomotor, we recommend selecting a SGM7M Servomotor.

1.5.2 Combinations of Direct Drive Servomotors and SERVOPACKs

Direct Drive Servomotor Model		Rated Torque [N·m]	Instantaneous Maximum Torque [N·m]	SERVOPACK Model
				SGD7S-
SGM7E (Small Capacity, Coreless, Inner Rotor)	SGM7E-02B	2	6	2R8A or 2R1F
	SGM7E-05B	5	15	
	SGM7E-07B	7	21	
	SGM7E-04C	4	12	2R8A or 2R8F
	SGM7E-10C	10	30	
	SGM7E-14C	14	42	
	SGM7E-08D	8	24	
	SGM7E-17D	17	51	
	SGM7E-25D	25	75	
	SGM7E-16E	16	48	5R5A
	SGM7E-35E	35	105	
SGM7F (Small Capacity, With Core, Inner Rotor)	SGM7F-02A	2	6	2R8A or 2R1F
	SGM7F-05A	5	15	
	SGM7F-07A	7	21	2R8A or 2R8F
	SGM7F-04B	4	12	
	SGM7F-10B	10	30	
	SGM7F-14B	14	42	5R5A
	SGM7F-08C	8	24	2R8A or 2R8F
	SGM7F-17C	17	51	5R5A
	SGM7F-25C	25	75	7R6A
	SGM7F-16D	16	48	5R5A
	SGM7F-35D	35	105	7R6A* or 120A
SGM7F (Medium Capacity, With Core, Inner Rotor)	SGM7F-45M	45	135	7R6A
	SGM7F-80M	80	240	120A
	SGM7F-80N	80	240	
	SGM7F-1AM	110	330	180A
	SGM7F-1EN	150	450	200A
	SGM7F-2ZN	200	600	
SGMCV (Small Capacity, With Core, Inner Rotor)	SGMCV-04B	4	12	2R8A or 2R8F
	SGMCV-10B	10	30	
	SGMCV-14B	14	42	5R5A
	SGMCV-08C	8	24	2R8A or 2R8F
	SGMCV-17C	17	51	5R5A
	SGMCV-25C	25	75	7R6A
	SGMCV-16D	16	48	5R5A
	SGMCV-35D	35	105	7R6A* or 120A

Continued on next page.

Continued from previous page.

Direct Drive Servomotor Model		Rated Torque [N·m]	Instantaneous Maximum Torque [N·m]	SERVOPACK Model SGD7S-
SGMCS (Small Capacity, Coreless, Inner Rotor)	SGMCS-02B	2	6	2R8A or 2R1F
	SGMCS-05B	5	15	
	SGMCS-07B	7	21	
	SGMCS-04C	4	12	2R8A or 2R8F
	SGMCS-10C	10	30	
	SGMCS-14C	14	42	
	SGMCS-08D	8	24	
	SGMCS-17D	17	51	
	SGMCS-25D	25	75	
	SGMCS-16E	16	48	5R5A
	SGMCS-35E	35	105	
SGMCS (Medium Capacity, With Core, Inner Rotor)	SGMCS-45M	45	135	7R6A
	SGMCS-80M	80	240	120A
	SGMCS-80N	80	240	
	SGMCS-1AM	110	330	180A
	SGMCS-1EN	150	450	200A
	SGMCS-2ZN	200	600	

* Use derated values for this combination. Refer to the following catalog for information on derating values.
AC Servo Drives Σ-7 Series (Catalog No.: KAEP S800001 23)

1.5.3 Combinations of Linear Servomotors and SERVOPACKs

Linear Servomotor Model		Rated Force [N]	Instantaneous Maximum Force [N]	SERVOPACK Model SGD7S-
SGLG (Coreless), Used with Standard-Force Magnetic Way	SGLGW-30A050C	12.5	40	R70A or R70F
	SGLGW-30A080C	25	80	R90A or R90F
	SGLGW-40A140C	47	140	
	SGLGW-40A253C	93	280	1R6A or 2R1F
	SGLGW-40A365C	140	420	2R8A or 2R8F
	SGLGW-60A140C	70	220	1R6A or 2R1F
	SGLGW-60A253C	140	440	2R8A or 2R8F
	SGLGW-60A365C	210	660	5R5A
	SGLGW-90A200C	325	1300	120A
	SGLGW-90A370C	550	2200	180A
	SGLGW-90A535C	750	3000	200A
SGLG (Coreless), Used with High-Force Magnetic Way	SGLGW-40A140C	57	230	1R6A or 2R1F
	SGLGW-40A253C	114	460	2R8A or 2R8F
	SGLGW-40A365C	171	690	3R8A
	SGLGW-60A140C	85	360	1R6A or 2R1F
	SGLGW-60A253C	170	720	3R8A
	SGLGW-60A365C	255	1080	7R6A

Continued on next page.

Continued from previous page.

Linear Servomotor Model		Rated Force [N]	Instantaneous Maximum Force [N]	SERVOPACK Model
				SGD7S-
SGLF (With F-type Iron Cores)	SGLFW-20A090A	25	86	1R6A or 2R1F
	SGLFW-20A120A	40	125	
	SGLFW-35A120A	80	220	
	SGLFW-35A230A	160	440	3R8A
	SGLFW-50A200B	280	600	5R5A
	SGLFW-50A380B	560	1200	120A
	SGLFW-1ZA200B			
	SGLFW-1ZA380B	1120	2400	200A
	SGLFW2-30A070A	45	135	1R6A or 2R1F
	SGLFW2-30A120A	90	270	
	SGLFW2-30A230A*	180	540	3R8A
		170	500	2R8A or 2R8F
	SGLFW2-45A200A	280	840	5R5A
	SGLFW2-45A380A*	560	1680	180A
			1500	120A
	SGLFW2-90A200A□1	560	1680	120A
	SGLFW2-90A200A□L	896	1680	
	SGLFW2-90A380A	1120	3360	200A
	SGLFW2-90A560A	1680	5040	330A
	SGLFW2-1DA380A	1680	5040	200A
	SGLFW2-1DA560A	2520	7560	330A
SGLT (With T-type Iron Cores)	SGLTW-20A170A	130	380	3R8A
	SGLTW-20A320A	250	760	7R6A
	SGLTW-20A460A	380	1140	120A
	SGLTW-35A170A	220	660	5R5A
	SGLTW-35A170H	300	600	
	SGLTW-35A320A	440	1320	120A
	SGLTW-35A320H	600	1200	
	SGLTW-35A460A	670	2000	180A
	SGLTW-40A400B	670	2600	
	SGLTW-40A600B	1000	4000	330A
	SGLTW-50A170H	450	900	5R5A
	SGLTW-50A320H	900	1800	120A
	SGLTW-80A400B	1300	5000	330A
	SGLTW-80A600B	2000	7500	550A

* The force depends on the SERVOPACK that is used with the Servomotor.

1.6 Functions

This section lists the functions provided by SERVOPACKs. Refer to the reference pages for details on the functions.

- Functions Related to the Machine

Function	Reference
Power Supply Type Settings for the Main Circuit and Control Circuit	page 5-14
Automatic Detection of Connected Motor	page 5-16
Motor Direction Setting	page 5-18
Linear Encoder Pitch Setting	page 5-19
Writing Linear Servomotor Parameters	page 5-20
Selecting the Phase Sequence for a Linear Servomotor	page 5-24
Polarity Sensor Setting	page 5-26
Polarity Detection	page 5-27
Overtravel Function and Settings	page 5-31
Holding Brake	page 5-36
Motor Stopping Methods for Servo OFF and Alarms	page 5-41
Resetting the Absolute Encoder	page 5-52
Setting the Origin of the Absolute Encoder	page 5-55
Setting the Regenerative Resistor Capacity	page 5-58
Operation for Momentary Power Interruptions	page 6-13
SEMI F47 Function	page 6-14
Setting the Motor Maximum Speed	page 6-16
Multiturn Limit Setting	page 6-83
Adjustment of Motor Current Detection Signal Offset	page 6-103
Forcing the Motor to Stop	page 6-107
Overheat Protection	page 6-110
Speed Ripple Compensation	page 8-60
Current Control Mode Selection	page 8-73
Current Gain Level Setting	page 8-73
Speed Detection Method Selection	page 8-74
Fully-Closed Loop Control	page 10-1
Safety Functions	page 11-1

- Functions Related to the Host Controller

Function	Reference
Electronic Gear Settings	page 5-46
I/O Signal Allocations	page 6-5
ALM (Servo Alarm) Signal	page 6-9
ALO1 to ALO3 (Alarm Code) Signals	page 6-10
/WARN (Warning) Signal	page 6-10
/TGON (Rotation Detection) Signal	page 6-11
/S-RDY (Servo Ready) Signal	page 6-12
Speed Control	page 6-17
Basic Settings for Speed Control	page 6-17
Speed Reference Filter	page 6-24
Zero Clamping	page 6-25
/V-CMP (Speed Coincidence Detection) Signal	page 6-27
Position Control	page 6-30
Reference Pulse Form	page 6-31
CLR (Position Deviation Clear) Signal Function and Settings	page 6-33
Reference Pulse Input Multiplication Switching	page 6-34
/COIN (Positioning Completion) Signal	page 6-37
/NEAR (Near) Signal	page 6-38
Reference Pulse Inhibition and Settings	page 6-40
Torque Control	page 6-40
Basic Settings for Torque Control	page 6-40
Torque Reference Filter Settings	page 6-45
Speed Limit during Torque Control	page 6-45
/VLT (Speed Limit Detection) Signal	page 6-46
Encoder Divided Pulse Output	page 6-48
Selecting Torque Limits	page 6-64
Vibration Detection Level Initialization	page 6-99
Alarm Reset	page 12-41
Replacing the Battery	page 12-3
Setting the Position Deviation Overflow Alarm Level	page 8-8

- Functions to Achieve Optimum Motions

Function	Reference
Speed Control	page 6-17
Soft Start Settings	page 6-24
Position Control	page 6-30
Smoothing Settings	page 6-35
Torque Control	page 6-40
Tuning-less Function	page 8-12
Autotuning without a Host Reference	page 8-24
Autotuning with a Host Reference	page 8-35
Custom Tuning	page 8-42
Anti-Resonance Control Adjustment	page 8-51
Vibration Suppression	page 8-56
Gain Selection	page 8-66
Friction Compensation	page 8-70
Gravity Compensation	page 8-71
Model Following Control	page 8-83
Compatible Adjustment Functions	page 8-87
Mechanical Analysis	page 8-93
Easy FFT	page 8-95

- Functions for Trial Operation during Setup

Function	Reference
Software Reset	page 6-97
Trial Operation for the Servomotor without a Load	page 7-7
Program Jogging	page 7-20
Origin Search	page 7-25
Test without a Motor	page 7-27
Monitoring Machine Operation Status and Signal Waveforms	page 9-8

- Functions for Inspection and Maintenance

Function	Reference
Write Prohibition Setting for Parameters	page 5-8
Initializing Parameter Settings	page 5-11
Automatic Detection of Connected Motor	page 5-16
Monitoring Product Information	page 9-2
Monitoring Product Life	page 9-2
Alarm History Display	page 12-42
Alarm Tracing	page 9-18

Selecting a SERVOPACK

2

This chapter provides information required to select SERVOPACKs, such as specifications, block diagrams, dimensional drawings, and connection examples.

2.1 Ratings and Specifications 2-2

2.1.1 Ratings 2-2
2.1.2 SERVOPACK Overload Protection Characteristics 2-6
2.1.3 Specifications 2-7

2.2 Block Diagrams 2-12

2.2.1 SGD7S-R70A, -R90A, and -1R6A 2-12
2.2.2 SGD7S-2R8A 2-12
2.2.3 SGD7S-3R8A, -5R5A, and -7R6A 2-13
2.2.4 SGD7S-120A 2-14
2.2.5 SGD7S-180A and -200A 2-15
2.2.6 SGD7S-330A 2-16
2.2.7 SGD7S-470A and -550A 2-17
2.2.8 SGD7S-590A and -780A 2-18
2.2.9 SGD7S-R70F, -R90F, and -2R1F 2-18
2.2.10 SGD7S-2R8F 2-19

2.3 External Dimensions 2-20

2.3.1 Front Cover Dimensions and Connector Specifications 2-20
2.3.2 SERVOPACK External Dimensions 2-21

2.4 Examples of Standard Connections between SERVOPACKs and Peripheral Devices . . 2-27

2.1 Ratings and Specifications

This section gives the ratings and specifications of SERVOPACKs.

2.1.1 Ratings

Three-Phase, 200 VAC

Model SGD7S-			R70A	R90A	1R6A	2R8A	3R8A	5R5A	7R6A	120A	180A	200A	330A
Maximum Applicable Motor Capacity [kW]			0.05	0.1	0.2	0.4	0.5	0.75	1.0	1.5	2.0	3.0	5.0
Continuous Output Current [Arms]			0.66	0.91	1.6	2.8	3.8	5.5	7.6	11.6	18.5	19.6	32.9
Instantaneous Maximum Output Current [Arms]			2.1	3.2	5.9	9.3	11	16.9	17	28	42	56	84
Main Circuit	Power Supply		200 VAC to 240 VAC, 50 Hz/60 Hz										
	Permitted Voltage Fluctuation		-15% to +10%										
	Input Current [Arms]*		0.4	0.8	1.3	2.5	3.0	4.1	5.7	7.3	10	15	25
Control	Power Supply		200 VAC to 240 VAC, 50 Hz/60 Hz										
	Permitted Voltage Fluctuation		-15% to +10%										
	Input Current [Arms]*		0.2	0.2	0.2	0.2	0.2	0.2	0.2	0.2	0.25	0.25	0.3
Power Supply Capacity [kVA]*			0.2	0.3	0.5	1.0	1.3	1.6	2.3	3.2	4.0	5.9	7.5
Power Loss*	Main Circuit Power Loss [W]		5.0	7.0	11.9	22.5	28.5	38.9	49.2	72.6	104.2	114.2	226.6
	Control Circuit Power Loss [W]		12	12	12	12	14	14	14	15	16	16	19
	Built-in Regenerative Resistor Power Loss [W]		–	–	–	–	8	8	8	12	12	12	36
	Total Power Loss [W]		17.0	19.0	23.9	34.5	50.5	60.9	71.2	97.6	136.2	146.2	281.6
Regenerative Resistor	Built-In Regenerative Resistor	Resistance [Ω]	–	–	–	–	40	40	40	20	12	12	8
		Capacity [W]	–	–	–	–	40	40	40	60	60	60	180
	Minimum Allowable External Resistance [Ω]		40	40	40	40	40	40	40	20	12	12	8
Overvoltage Category			III										

* This is the net value at the rated load.

Model SGD7S-		470A	550A	590A	780A
Maximum Applicable Motor Capacity [kW]		6.0	7.5	11	15
Continuous Output Current [Arms]		46.9	54.7	58.6	78.0
Instantaneous Maximum Output Current [Arms]		110	130	140	170
Main Circuit	Power Supply	200 VAC to 240 VAC, 50 Hz/60 Hz			
	Permitted Voltage Fluctuation	-15% to +10%			
	Input Current [Arms]*1	29	37	54	73
Control	Power Supply	200 VAC to 240 VAC, 50 Hz/60 Hz			
	Permitted Voltage Fluctuation	-15% to +10%			
	Input Current [Arms]*1	0.3	0.3	0.4	0.4
Power Supply Capacity [kVA]*1		10.7	14.6	21.7	29.6
Power Loss*1	Main Circuit Power Loss [W]	271.7	326.9	365.3	501.4
	Control Circuit Power Loss [W]	21	21	28	28
	External Regenerative Resistor Unit Power Loss [W]	180*2	350*3	350*3	350*3
	Total Power Loss [W]	292.7	347.9	393.3	529.4
External Regenerative Resistor Unit	Resistance [Ω]	6.25*2	3.13*3	3.13*3	3.13*3
	Capacity [W]	880*2	1760*3	1760*3	1760*3
	Minimum Allowable External Resistance [Ω]	5.8	2.9	2.9	2.9
Overvoltage Category		III			

*1. This is the net value at the rated load.
*2. This value is for the optional JUSP-RA04-E Regenerative Resistor Unit.
*3. This value is for the optional JUSP-RA05-E Regenerative Resistor Unit.

Single-Phase, 200 VAC

Model SGD7S-			R70A	R90A	1R6A	2R8A	5R5A	120A
Maximum Applicable Motor Capacity [kW]			0.05	0.1	0.2	0.4	0.75	1.5
Continuous Output Current [Arms]			0.66	0.91	1.6	2.8	5.5	11.6
Instantaneous Maximum Output Current [Arms]			2.1	3.2	5.9	9.3	16.9	28
Main Circuit	Power Supply		200 VAC to 240 VAC, 50 Hz/60 Hz					
	Permitted Voltage Fluctuation		-15% to +10%					
	Input Current [Arms]*		0.8	1.6	2.4	5.0	8.7	16
Control	Power Supply		200 VAC to 240 VAC, 50 Hz/60 Hz					
	Permitted Voltage Fluctuation		-15% to +10%					
	Input Current [Arms]*		0.2	0.2	0.2	0.2	0.2	0.25
Power Supply Capacity [kVA]*			0.2	0.3	0.6	1.2	1.9	4.0
Power Loss*	Main Circuit Power Loss [W]		5.0	7.1	12.1	23.7	39.2	71.8
	Control Circuit Power Loss [W]		12	12	12	12	14	16
	Built-in Regenerative Resistor Power Loss [W]		–	–	–	–	8	12
	Total Power Loss [W]		17.0	19.1	24.1	35.7	61.2	103.8
Regenerative Resistor	Built-In Regenerative Resistor	Resistance [Ω]	–	–	–	–	40	12
		Capacity [W]	–	–	–	–	40	60
	Minimum Allowable External Resistance [Ω]		40	40	40	40	40	12
Overvoltage Category			III					

* This is the net value at the rated load.

270 VDC

Model SGD7S-		R70A	R90A	1R6A	2R8A	3R8A	5R5A	7R6A	120A
Maximum Applicable Motor Capacity [kW]		0.05	0.1	0.2	0.4	0.5	0.75	1.0	1.5
Continuous Output Current [Arms]		0.66	0.91	1.6	2.8	3.8	5.5	7.6	11.6
Instantaneous Maximum Output Current [Arms]		2.1	3.2	5.9	9.3	11.0	16.9	17.0	28.0
Main Circuit	Power Supply	270 VDC to 324 VDC							
	Permitted Voltage Fluctuation	-15% to +10%							
	Input Current [Arms]*1	0.5	1.0	1.5	3.0	3.8	4.9	6.9	11
Control	Power Supply	270 VDC to 324 VDC							
	Permitted Voltage Fluctuation	-15% to +10%							
	Input Current [Arms]*1	0.2	0.2	0.2	0.2	0.2	0.2	0.2	0.2*2
Power Supply Capacity [kVA]*1		0.2	0.3	0.6	1	1.4	1.6	2.3	3.2
Power Loss*1	Main Circuit Power Loss [W]	4.4	5.9	9.8	17.5	23.0	30.7	38.7	55.8
	Control Circuit Power Loss [W]	12	12	12	12	14	14	14	15
	Total Power Loss [W]	16.4	17.9	21.8	29.5	37.0	44.7	52.7	70.8
Overvoltage Category		III							

*1. This is the net value at the rated load.
*2. The value is 0.25 Arms for the SGD7S-120A00A008.

Model SGD7S-		180A	200A	330A	470A	550A	590A	780A
Maximum Applicable Motor Capacity [kW]		2.0	3.0	5.0	6.0	7.5	11.0	15.0
Continuous Output Current [Arms]		18.5	19.6	32.9	46.9	54.7	58.6	78.0
Instantaneous Maximum Output Current [Arms]		42.0	56.0	84.0	110	130	140	170
Main Circuit	Power Supply	270 VDC to 324 VDC						
	Permitted Voltage Fluctuation	-15% to +10%						
	Input Current [Arms]*	14	20	34	36	48	68	92
Control	Power Supply	270 VDC to 324 VDC						
	Permitted Voltage Fluctuation	-15% to +10%						
	Input Current [Arms]*	0.25	0.25	0.3	0.3	0.3	0.4	0.4
Power Supply Capacity [kVA]*		4.0	5.9	7.5	10.7	14.6	21.7	29.6
Power Loss*	Main Circuit Power Loss [W]	82.7	83.5	146.2	211.6	255.3	243.6	343.4
	Control Circuit Power Loss [W]	16	16	19	21	21	28	28
	Total Power Loss [W]	98.7	99.5	165.2	232.6	276.3	271.6	371.4
Overvoltage Category		III						

* This is the net value at the rated load.

Single-Phase, 100 VAC

Model SGD7S-		R70F	R90F	2R1F	2R8F
Maximum Applicable Motor Capacity [kW]		0.05	0.1	0.2	0.4
Continuous Output Current [Arms]		0.66	0.91	2.1	2.8
Instantaneous Maximum Output Current [Arms]		2.1	3.2	6.5	9.3
Main Circuit	Power Supply	100 VAC to 120 VAC, 50 Hz/60 Hz			
	Permitted Voltage Fluctuation	-15% to +10%			
	Input Current [Arms]*	1.5	2.5	5	10
Control	Power Supply	100 VAC to 120 VAC, 50 Hz/60 Hz			
	Permitted Voltage Fluctuation	-15% to +10%			
	Input Current [Arms]*	0.38	0.38	0.38	0.38
Power Supply Capacity [kVA]*		0.2	0.3	0.6	1.4
Power Loss*	Main Circuit Power Loss [W]	5.3	7.8	14.2	26.2
	Control Circuit Power Loss [W]	12	12	12	12
	Total Power Loss [W]	17.3	19.8	26.2	38.2
Regenera-tive Resistor	Minimum Allowable Resistance [Ω]	40	40	40	40
Overvoltage Category		III			

* This is the net value at the rated load.

2.1.2 SERVOPACK Overload Protection Characteristics

The overload detection level is set for hot start conditions with a SERVOPACK surrounding air temperature of 55°C.

An overload alarm (A.710 or A.720) will occur if overload operation that exceeds the overload protection characteristics shown in the following diagram (i.e., operation on the right side of the applicable line) is performed.

The actual overload detection level will be the detection level of the connected SERVOPACK or Servomotor that has the lower overload protection characteristics.

In most cases, that will be the overload protection characteristics of the Servomotor.

- SGD7S-R70A, -R90A, -1R6A, -2R8A, -R70F, -R90F, -2R1F, and -2R8F

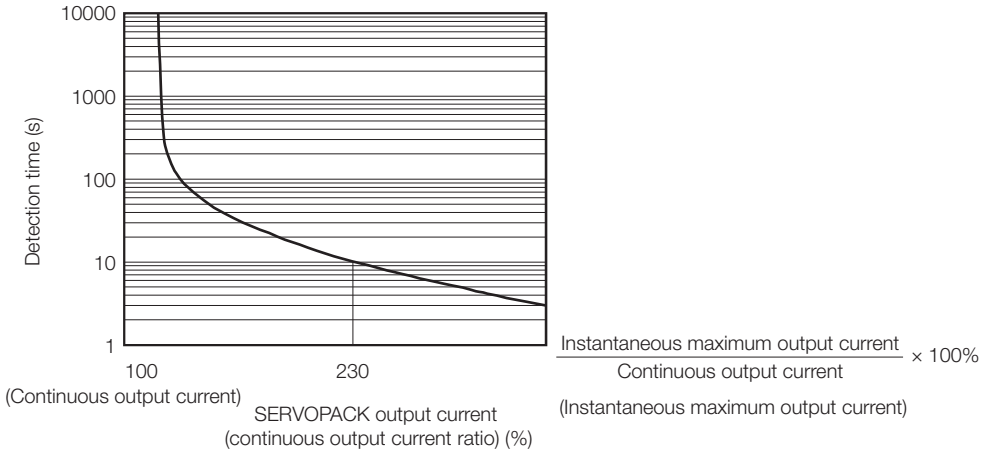

Note: The above overload protection characteristics do not mean that you can perform continuous duty operation with an output of 100% or higher.
For a Yaskawa-specified combination of SERVOPACK and Servomotor, maintain the effective torque within the continuous duty zone of the torque-motor speed characteristic of the Servomotor.

- SGD7S-3R8A, -5R5A, -7R6A, -120A, -180A, -200A, -330A, -470A, -550A, -590A, and -780A

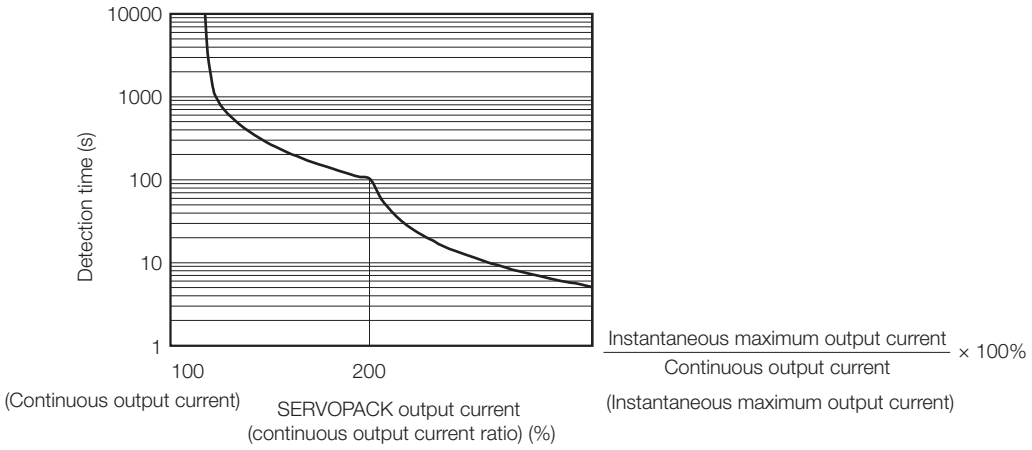

Note: The above overload protection characteristics do not mean that you can perform continuous duty operation with an output of 100% or higher.
For a Yaskawa-specified combination of SERVOPACK and Servomotor, maintain the effective torque within the continuous duty zone of the torque-motor speed characteristic of the Servomotor.

2.1.3 Specifications

Item		Specification
Control Method		IGBT-based PWM control, sine wave current drive
Feedback	With Rotary Servomotor	Serial encoder: 17 bits (absolute encoder) 20 bits or 24 bits (incremental encoder/absolute encoder) 22 bits (absolute encoder)
	With Linear Servomotor	• Absolute linear encoder (The signal resolution depends on the absolute linear encoder.) • Incremental linear encoder (The signal resolution depends on the incremental linear encoder or Serial Converter Unit.)
Environ-mental Conditions	Surrounding Air Temperature*1	-5°C to 55°C (With derating, usage is possible between 55°C and 60°C.) Refer to the following section for derating specifications. ☞ *3.6 Derating Specifications* on page 3-8
	Storage Temperature	-20°C to 85°C
	Surrounding Air Humidity	95% relative humidity max. (with no freezing or condensation)
	Storage Humidity	95% relative humidity max. (with no freezing or condensation)
	Vibration Resistance	4.9 m/s^2
	Shock Resistance	19.6 m/s^2
	Degree of Protection	Degree: SERVOPACK Model: SGD7S- IP20: R70A, R90A, 1R6A, 2R8A, 3R8A, 5R5A, 7R6A, 120A, R70F, R90F, 2R1F, 2R8F IP10: 120A00A008, 180A, 200A, 330A, 470A, 550A, 590A, 780A
	Pollution Degree	2 • Must be no corrosive or flammable gases. • Must be no exposure to water, oil, or chemicals. • Must be no dust, salts, or iron dust.
	Altitude*1	1,000 m max. (With derating, usage is possible between 1,000 m and 2,000 m.) Refer to the following section for derating specifications. ☞ *3.6 Derating Specifications* on page 3-8
	Others	Do not use the SERVOPACK in the following locations: Locations subject to static electricity, noise, strong electromagnetic/magnetic fields, or radioactivity
Compliant Standards		Refer to the following section for details. ☞ *Compliance with UL Standards, EU Directives, UK Regulations, and Other Safety Standards* on page xxvi
Mounting		Mounting: SERVOPACK Model: SGD7S- Base-mounted: All Models Rack-mounted: R70A, R90A, 1R6A, 2R8A, 3R8A, 5R5A, 7R6A, 120A, 180A, 200A, 330A, R70F, R90F, 2R1F, 2R8F Duct-ventilated: 470A, 550A, 590A, 780A

Continued on next page.

Continued from previous page.

Item			Specification
Performance	Speed Control Range		1:5000 (At the rated torque, the lower limit of the speed control range must not cause the Servomotor to stop.)
	Coefficient of Speed Fluctuation*2		±0.01% of rated speed max. (for a load fluctuation of 0% to 100%)
			0% of rated speed max. (for a voltage fluctuation of ±10%)
			±0.1% of rated speed max. (for a temperature fluctuation of 25°C ±25°C)
	Torque Control Precision (Repeatability)		±1%
	Soft Start Time Setting		0 s to 10 s (Can be set separately for acceleration and deceleration.)
I/O Signals	Encoder Divided Pulse Output		Phase A, phase B, phase C: Line-driver output Number of divided output pulses: Any setting is allowed.
	Overheat Protection Input		Number of input points: 1 Input voltage range: 0 V to +5 V
	Sequence Input Signals	Fixed Input	Allowable voltage range: 5 VDC ±5% Number of input points: 1 (Input method: Sink inputs or source inputs)
			SEN (Absolute Data Request) signal
		Input Signals That Can Be Allocated	Allowable voltage range: 24 VDC ±20% Number of input points: 7 (Input method: Sink inputs or source inputs)
			Input Signals • /S-ON (Servo ON) signal • /P-CON (Proportional Control) signal • P-OT (Forward Drive Prohibit) and N-OT (Reverse Drive Prohibit) signals • /ALM-RST (Alarm Reset) signal • /P-CL (Forward External Torque Limit) and /N-CL (Reverse External Torque Limit) signals • /SPD-D (Motor Direction) signal • /SPD-A and /SPD-B (Internal Set Speed Selection) signals • /C-SEL (Control Selection) signal • /ZCLAMP (Zero Clamping) signal • /INHIBIT (Reference Pulse Inhibit) signal • /G-SEL (Gain Selection) signal • /P-DET (Polarity Detection) signal • SEN (Absolute Data Request) signal • /PSEL (Reference Pulse Input Multiplication Switch) signal • FSTP (Forced Stop Input) signal A signal can be allocated and the positive and negative logic can be changed.

Continued on next page.

Continued from previous page.

Item			Specification
I/O Signals	Sequence Output Signals	Fixed Output	Allowable voltage range: 5 VDC to 30 VDC Number of output points: 1 (A photocoupler output (isolated) is used.)
			Output signal: ALM (Servo Alarm) signal
		Output Signals That Can Be Allocated	Allowable voltage range: 5 VDC to 30 VDC Number of output points: 6 (A photocoupler output (isolated) is used for three of the outputs.) (An open-collector output (non-isolated) is used for the other three outputs.)
			Output Signals • /COIN (Positioning Completion) signal • /V-CMP (Speed Coincidence Detection) signal • /TGON (Rotation Detection) signal • /S-RDY (Servo Ready) signal • /CLT (Torque Limit Detection) signal • /VLT (Speed Limit Detection) signal • /BK (Brake) signal • /WARN (Warning) signal • /NEAR (Near) signal • /PSELA (Reference Pulse Input Multiplication Switching Output) signal • ALO1, ALO2, and ALO3 (Alarm Code) signals A signal can be allocated and the positive and negative logic can be changed.
Communications	RS-422A Communications (CN3)	Interfaces	Digital Operator (JUSP-OP05A-1-E) and personal computer (with SigmaWin+)
		1:N Communications	Up to N = 15 stations possible for RS-422A port
		Axis Address Setting	Set with parameters.
	USB Communications (CN7)	Interface	Personal computer (with SigmaWin+)
		Communications Standard	Conforms to USB2.0 standard (12 Mbps).
Displays/Indicators			CHARGE indicator and five-digit seven-segment display
Panel Operator			Four push switches
Analog Monitor (CN5)			Number of points: 2 Output voltage range: ±10 VDC (effective linearity range: ±8 V) Resolution: 16 bits Accuracy: ±20 mV (Typ) Maximum output current: ±10 mA Settling time (±1%): 1.2 ms (Typ)
Dynamic Brake (DB)			Activated when a servo alarm or overtravel (OT) occurs, or when the power supply to the main circuit or servo is OFF.
Regenerative Processing			Built-in (An external resistor must be connected to the SGD7S-470A to -780A.) Refer to the following catalog for details. AC Servo Drives Σ-7 Series (Catalog No.: KAEP S800001 23)
Overtravel (OT) Prevention			Stopping with dynamic brake, deceleration to a stop, or coasting to a stop for the P-OT (Forward Drive Prohibit) or N-OT (Reverse Drive Prohibit) signal
Protective Functions			Overcurrent, overvoltage, low voltage, overload, regeneration error, etc.
Utility Functions			Gain adjustment, alarm history, jogging, origin search, etc.

Continued on next page.

Continued from previous page.

Item					Specification
Safety Functions		Inputs			/HWBB1 and /HWBB2: Base block signals for Power Modules
		Output			EDM1: Monitors the status of built-in safety circuit (fixed output).
		Compliant Standards*3			ISO13849-1 PLe (Category 3) and IEC61508 SIL3
Applicable Option Modules					Fully-closed Modules and Safety Modules Note: You cannot use a Fully-closed Module and a Safety Module together.
Controls	Speed Control	Soft Start Time Setting			0 s to 10 s (Can be set separately for acceleration and deceleration.)
		Input Signal		Reference Voltage	• Maximum input voltage: ±12 V (forward motor rotation for positive reference). • 6 VDC at rated speed (default setting). Input gain setting can be changed.
				Input Impedance	Approx. 14 kΩ
				Circuit Time Constant	30 μs
		Internal Set Speed Control		Rotation Direction Selection	With Proportional Control signal
				Speed Selection	With Forward/Reverse External Torque Limit signals (speed 1 to 3 selection). Servomotor stops or another control method is used when both signals are OFF.
	Position Control	Feedforward Compensation			0% to 100%
		Output Signal Positioning Completed Width Setting			0 to 1,073,741,824 reference units
		Input Signals	Reference pulses	Reference Pulse Form	One of the following is selected: Sign + pulse train, CW + CCW pulse trains, and two-phase pulse trains with 90° phase differential
				Input Form	Line driver or open collector
				Maximum Input Frequency	• Line Driver Sign + pulse train or CW + CCW pulse trains: 4 Mpps Two-phase pulse trains with 90° phase differential: 1 Mpps • Open Collector Sign + pulse train or CW + CCW pulse trains: 200 kpps Two-phase pulse trains with 90° phase differential: 200 kpps
				Input Multiplication Switching	1 to 100 times
			Clear Signal		Position deviation clear Line driver or open collector

Continued on next page.

Continued from previous page.

Item				Specification
Controls	Torque Control	Input Signal	Reference Voltage	• Maximum input voltage: ±12 V (forward torque output for positive reference). • 3 VDC at rated torque (default setting). Input gain setting can be changed.
			Input Impedance	Approx. 14 kΩ
			Circuit Time Constant	16 μs

*1. If you combine a Σ-7-Series SERVOPACK with a Σ-V-Series Option Module, the following Σ-V-Series SERVOPACKs specifications must be used: a surrounding air temperature of 0°C to 55°C and an altitude of 1,000 m max. Also, the applicable surrounding range cannot be increased by derating.

*2. The coefficient of speed fluctuation for load fluctuation is defined as follows:

$$\text{Coefficient of speed fluctuation} = \frac{\text{No-load motor speed - Total-load motor speed}}{\text{Rated motor speed}} \times 100\%$$

*3. Always perform risk assessment for the system and confirm that the safety requirements are met.

2.2 Block Diagrams

2.2.1 SGD7S-R70A, -R90A, and -1R6A

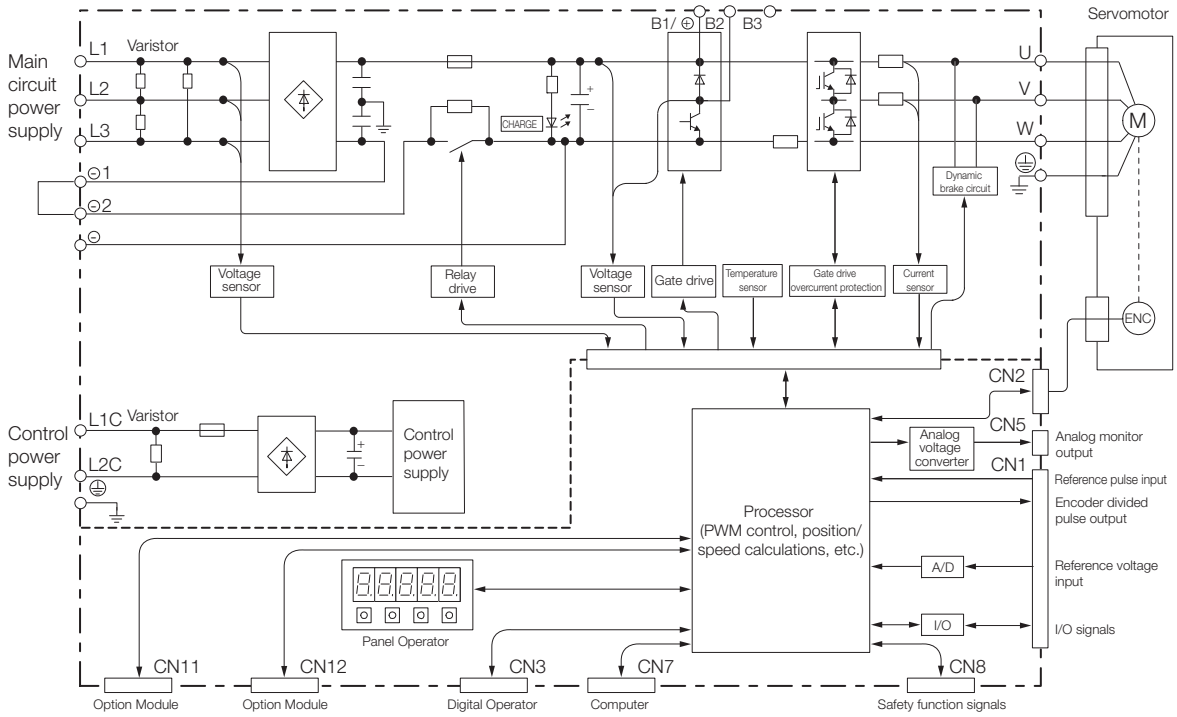

2.2.2 SGD7S-2R8A

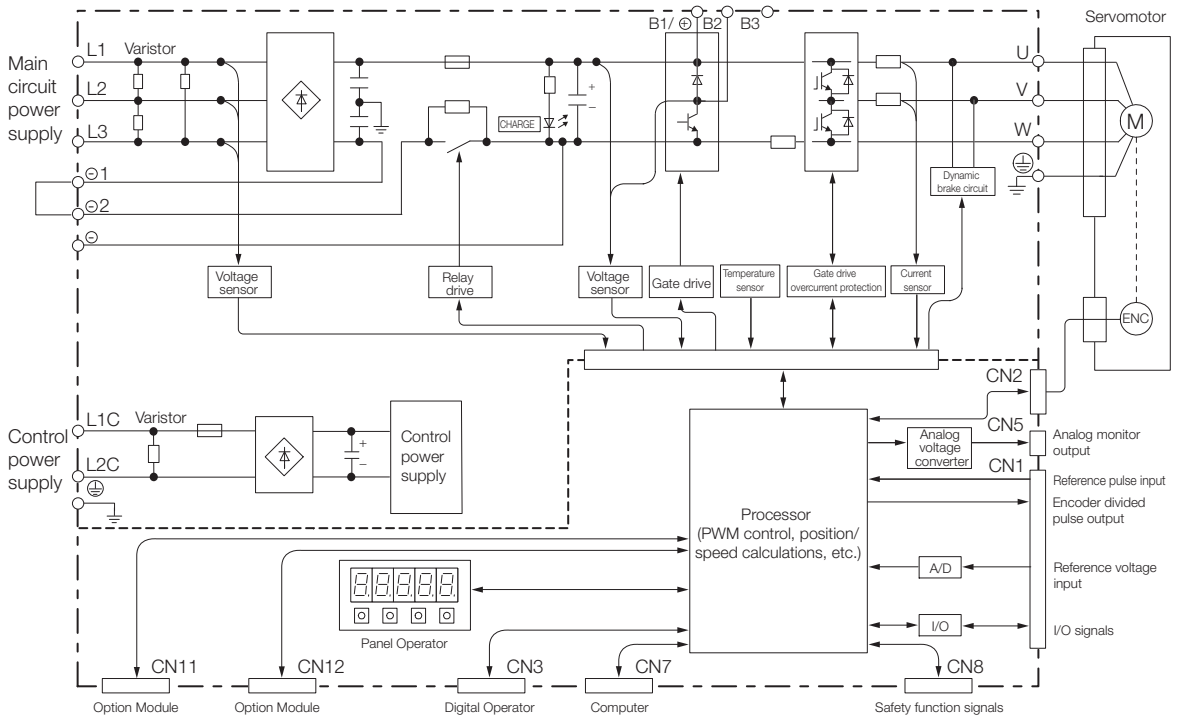

2.2.3 SGD7S-3R8A, -5R5A, and -7R6A

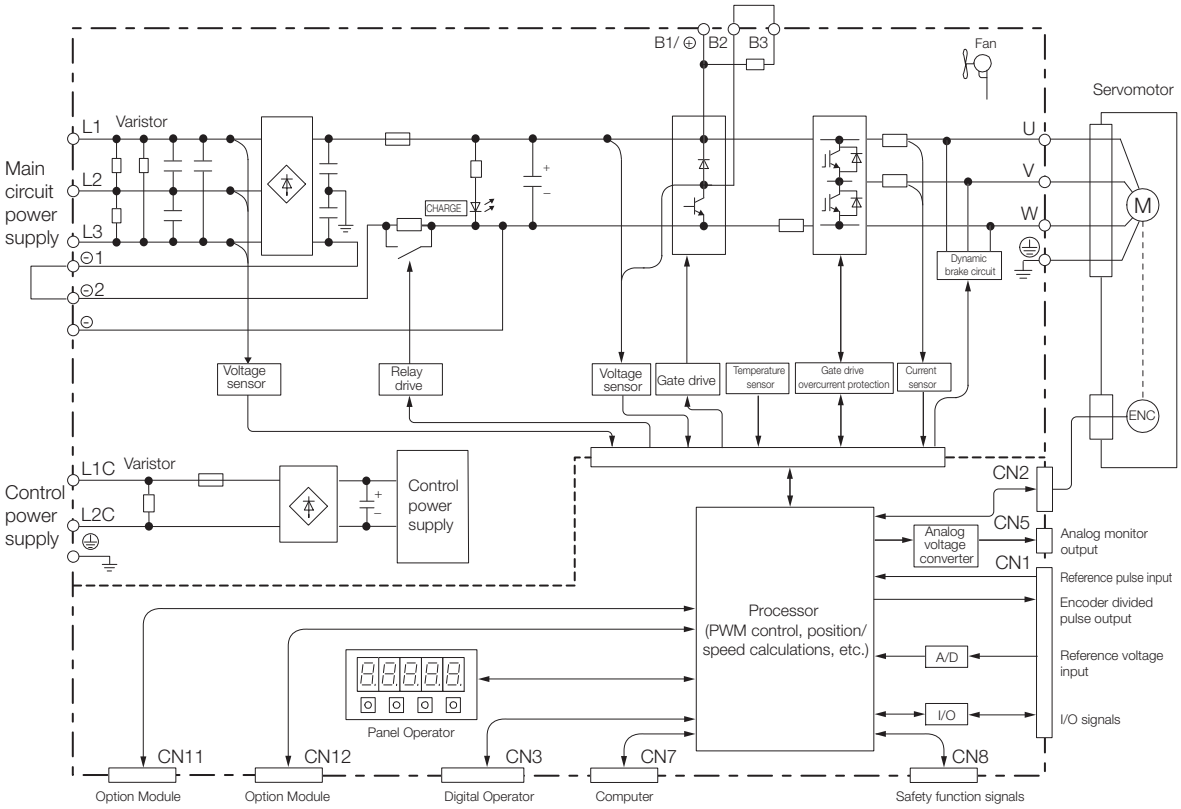

2.2.4 SGD7S-120A

- Standard Specifications: Three-Phase, 200-VAC Power Supply Input

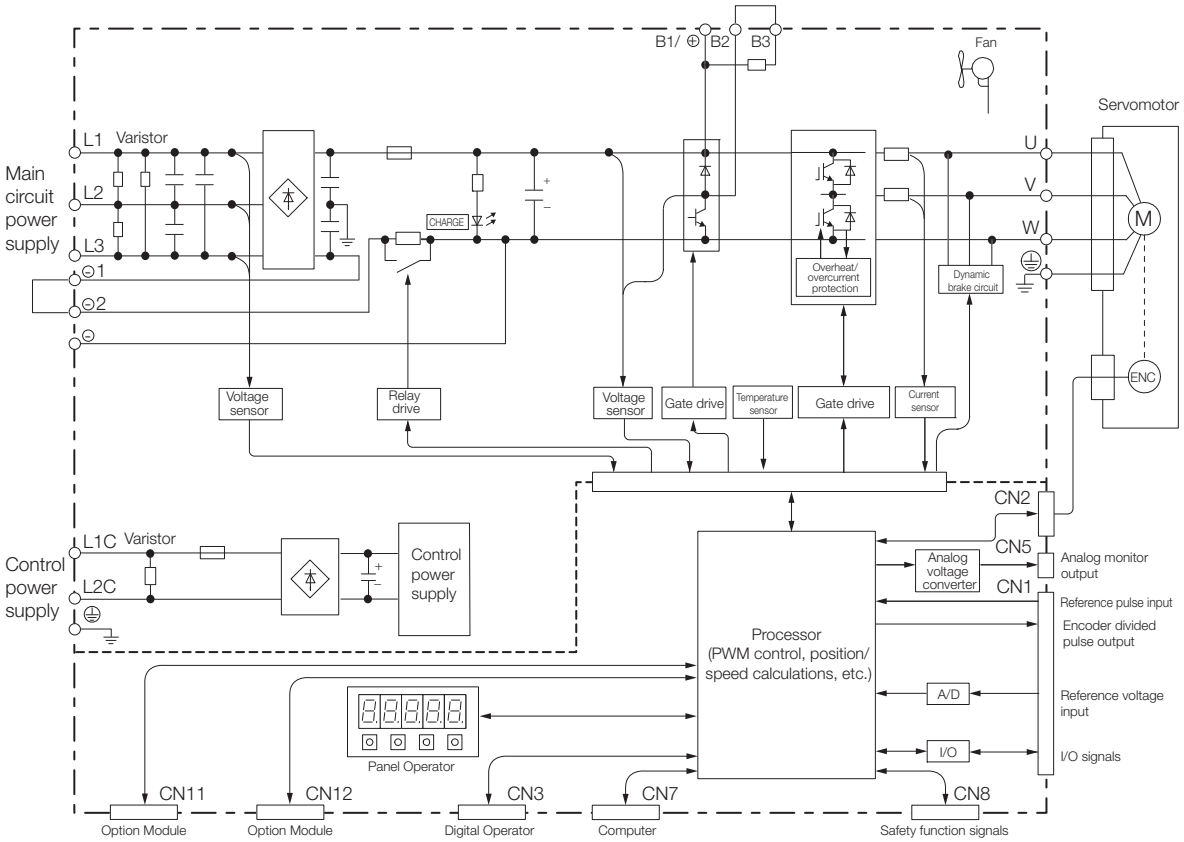

- Optional Specifications: Single-Phase, 200-VAC Power Supply Input (SERVOPACK Model: SGD7S-120A00A008)

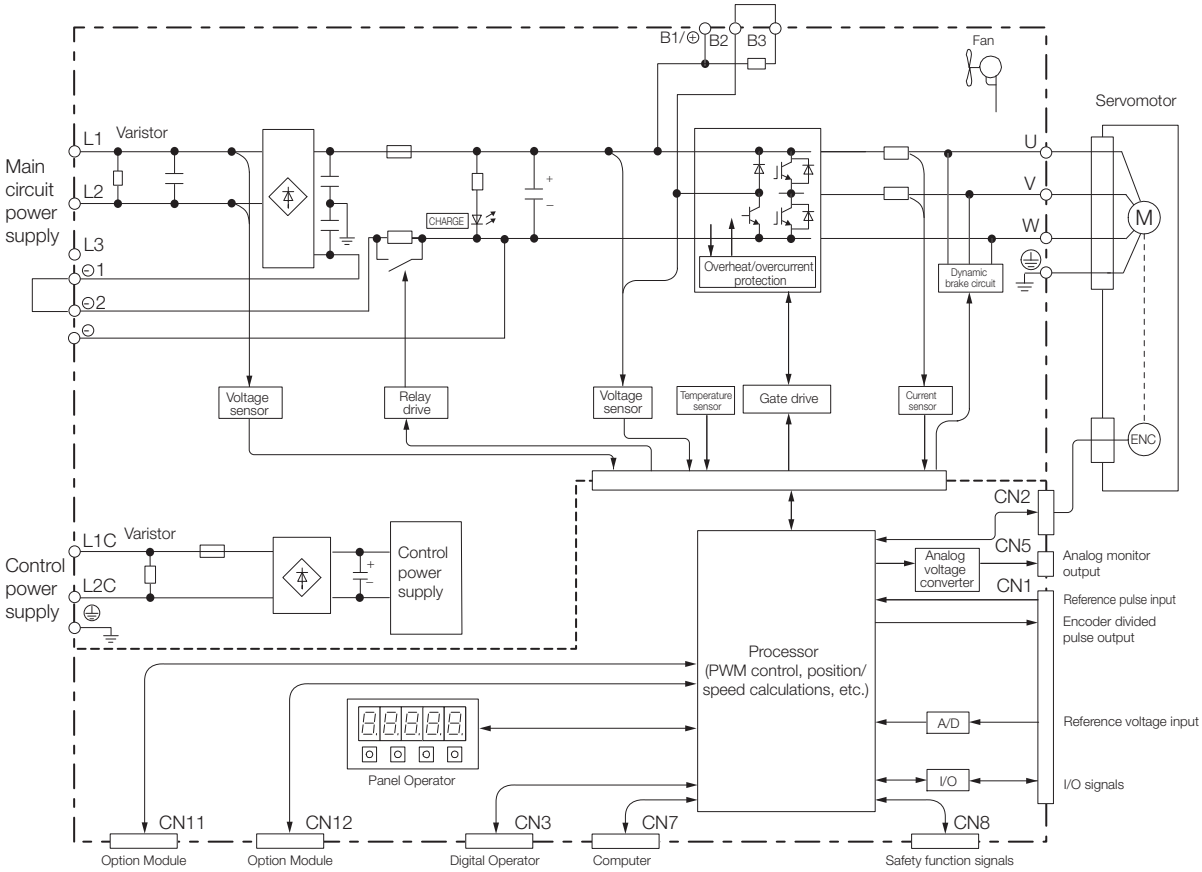

2.2.5 SGD7S-180A and -200A

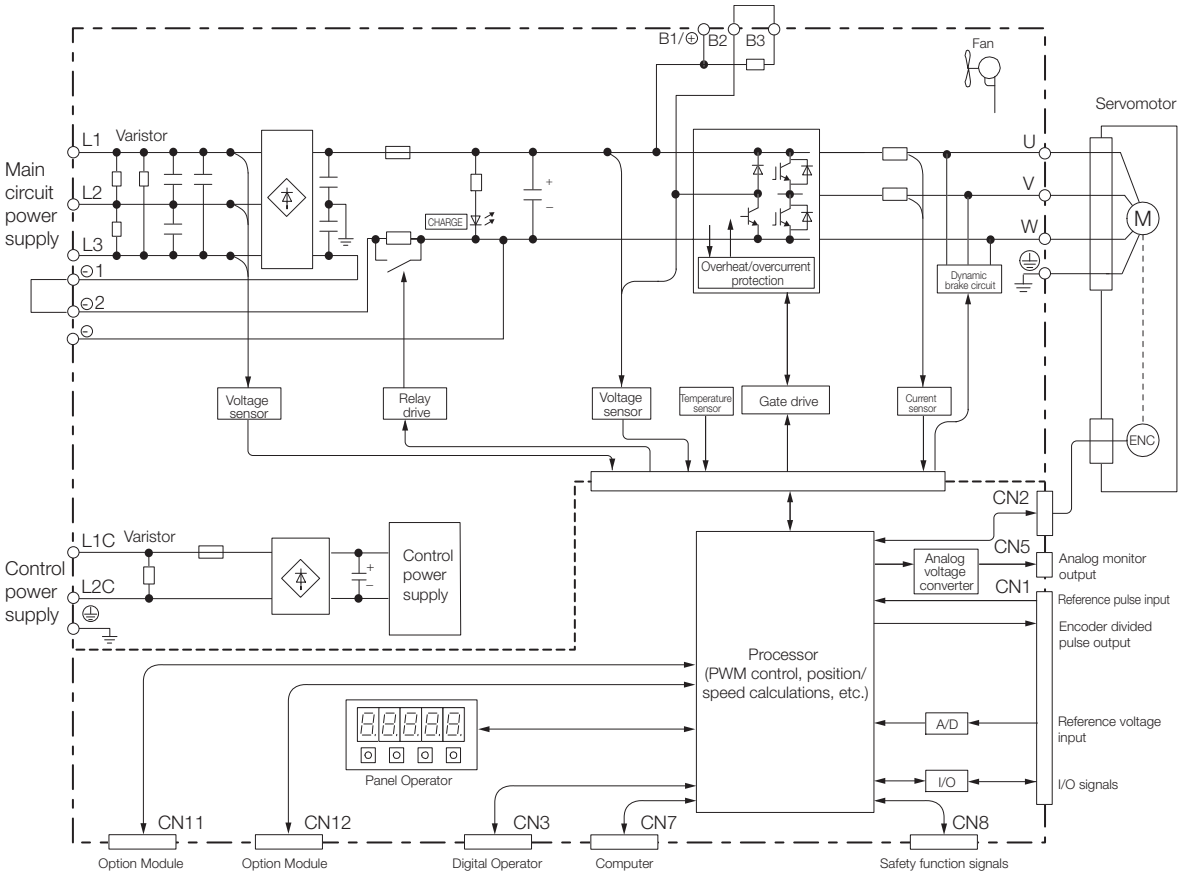

2.2.6 SGD7S-330A

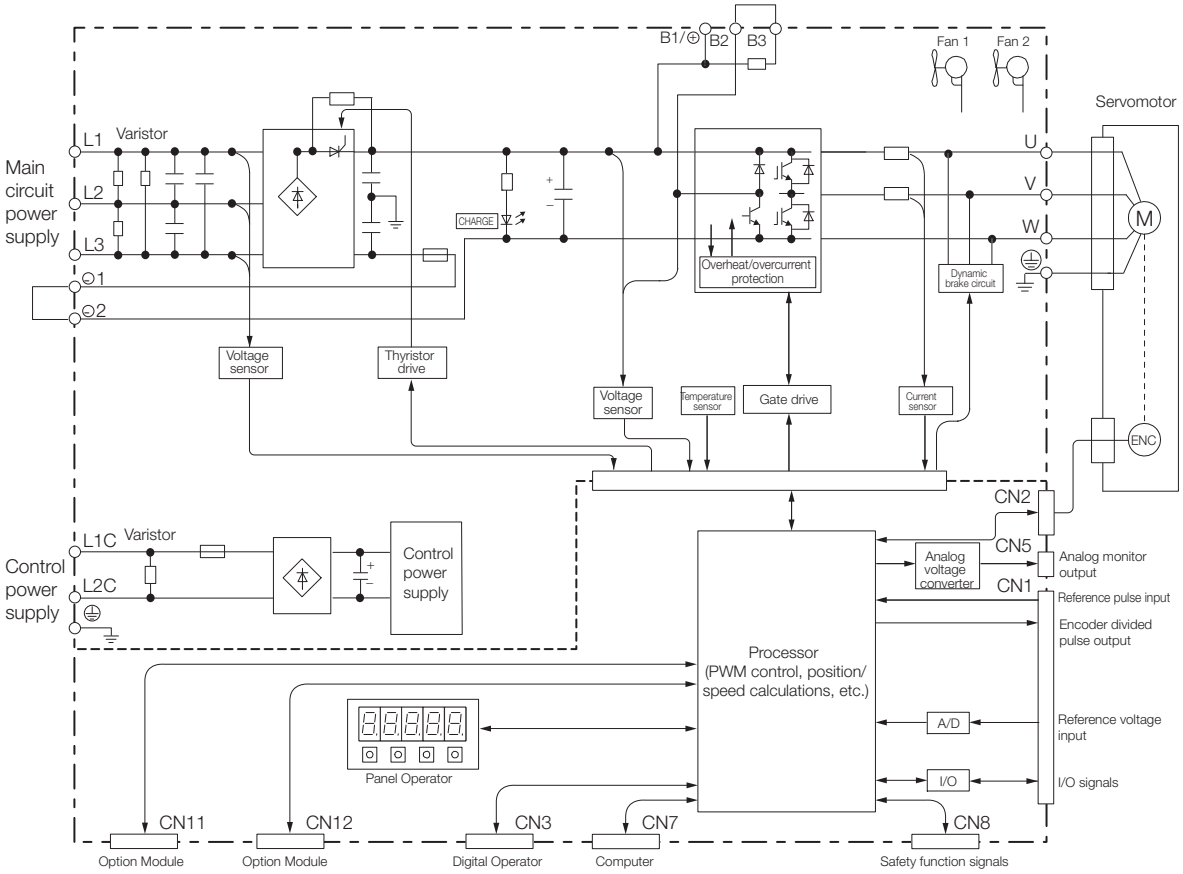

2.2.7 SGD7S-470A and -550A

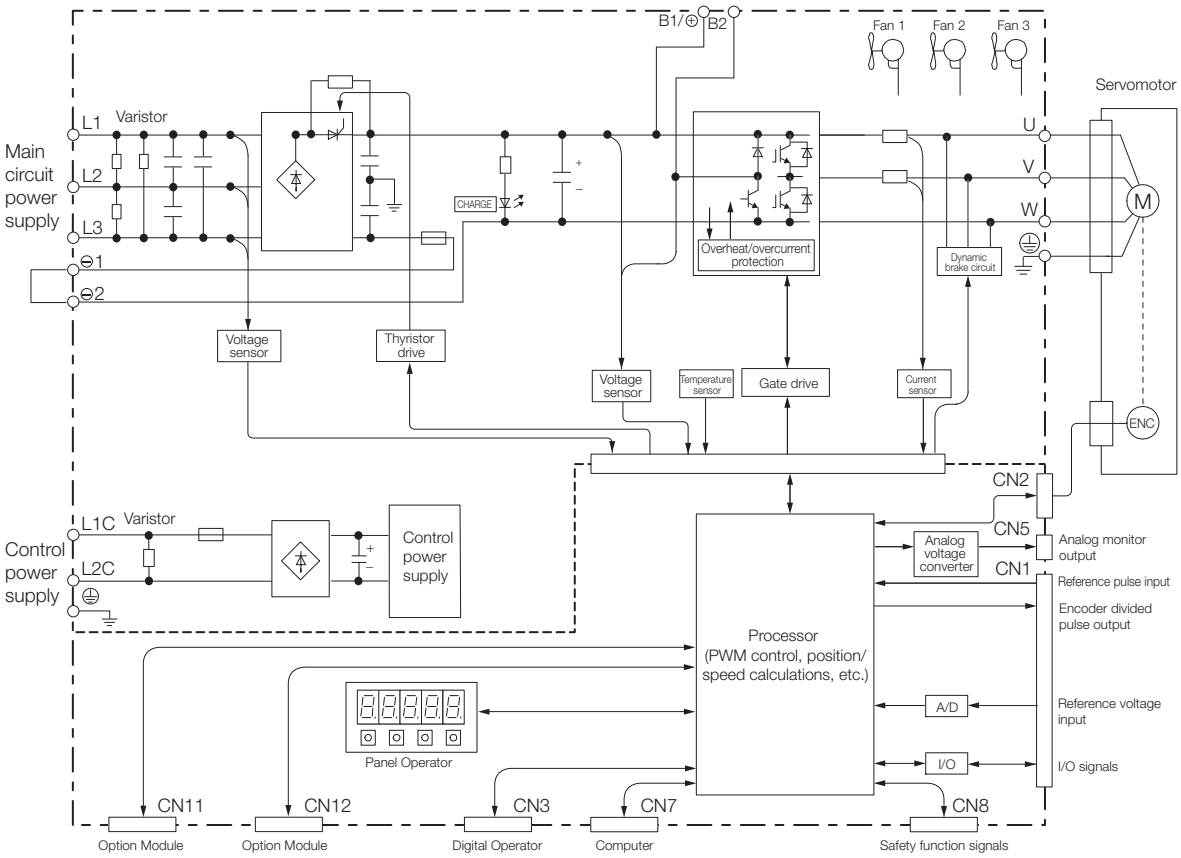

2.2.8 SGD7S-590A and -780A

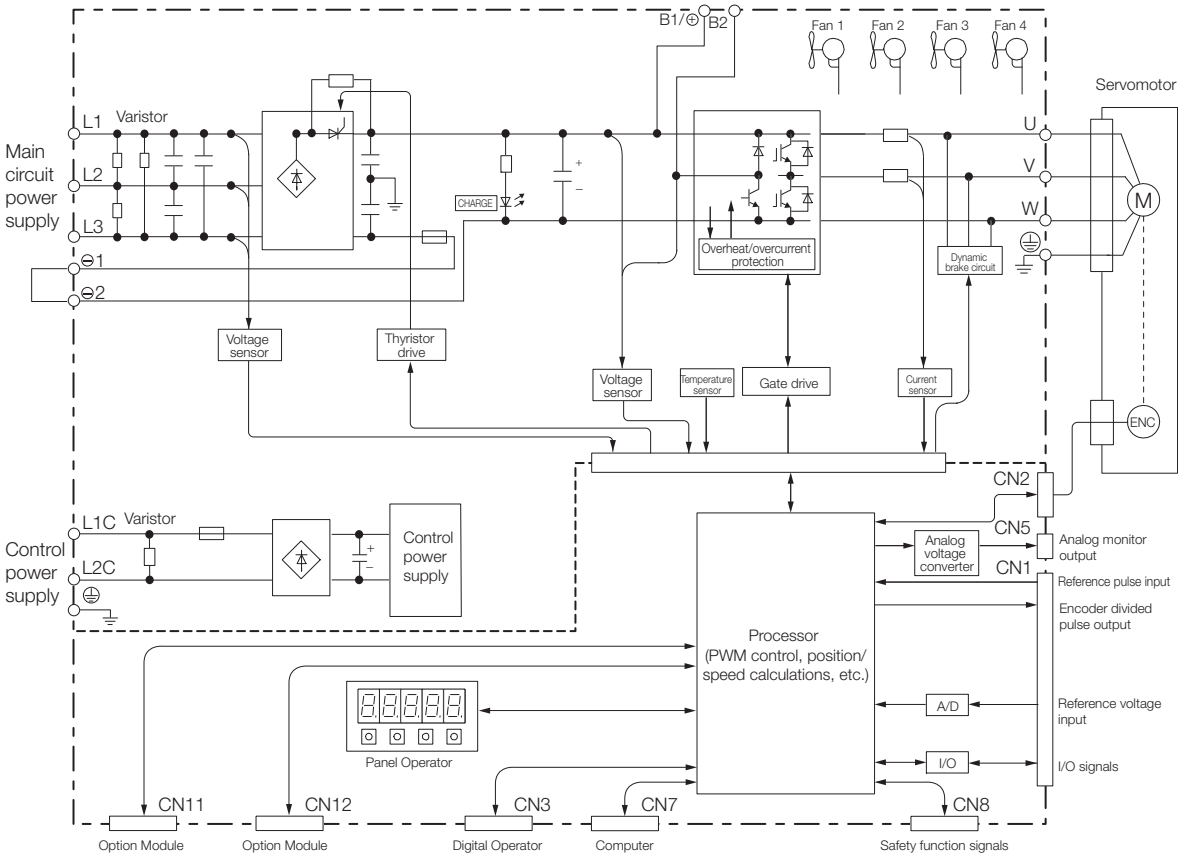

2.2.9 SGD7S-R70F, -R90F, and -2R1F

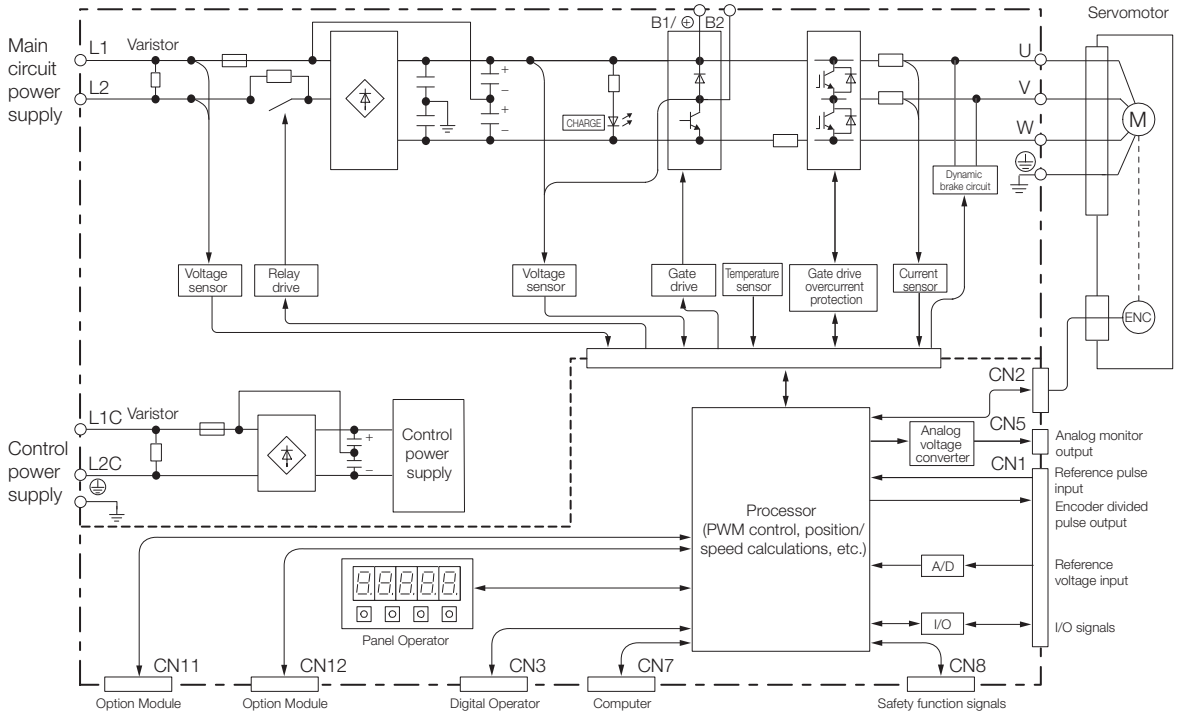

2.2.10 SGD7S-2R8F

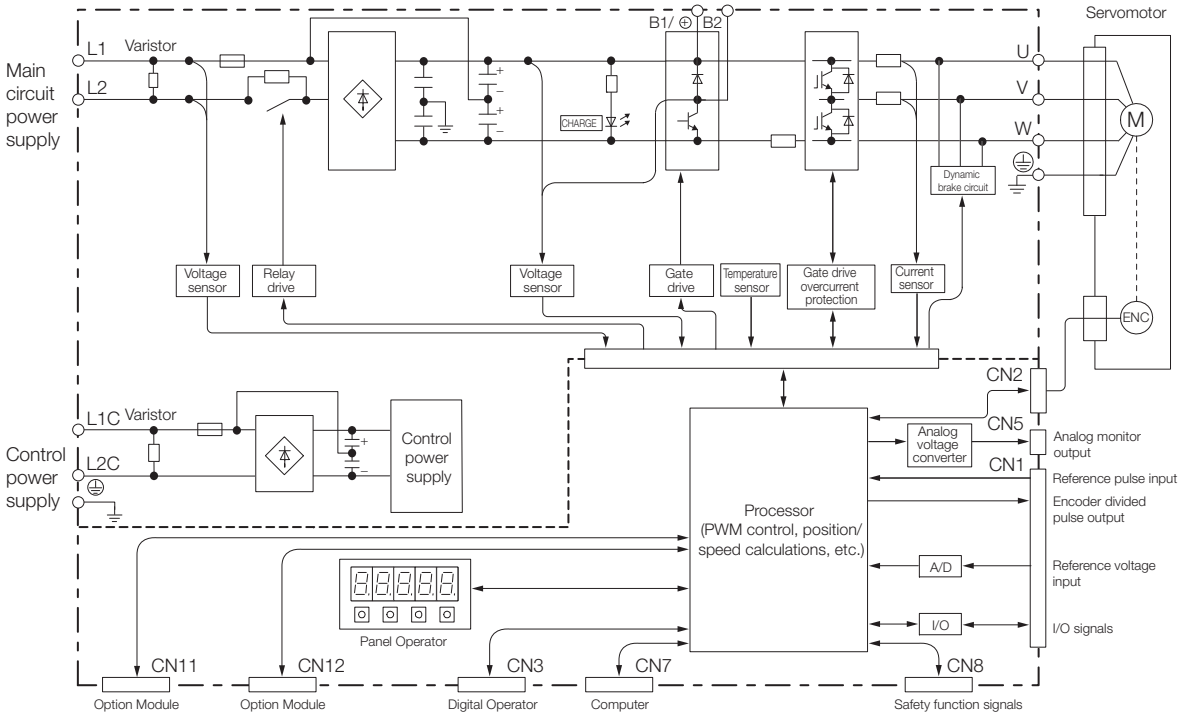

2.3 External Dimensions

2.3.1 Front Cover Dimensions and Connector Specifications

The front cover dimensions and panel connector section are the same for all models. Refer to the following figures and table.

- Front Cover Dimensions

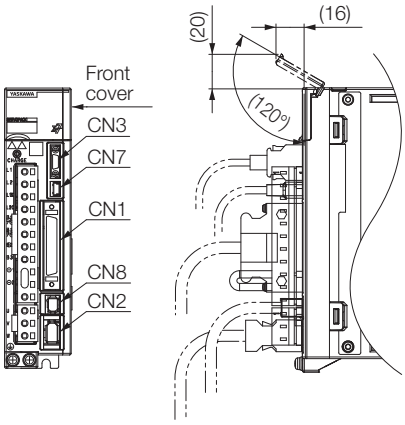

- Connector Specifications

Connector No.	Model	Number of Pins	Manufacturer
CN1	10250-59A3MB	50	3M Japan Limited
CN2	3E106-0220KV	6	3M Japan Limited
CN3	HDR-EC14LFDTN-SLD-PLUS	14	Honda Tsushin Kogyo Co., Ltd.
CN7	2172034-1	5	Tyco Electronics Japan G.K.
CN8	1981080-1	8	Tyco Electronics Japan G.K.

Note: The above connectors or their equivalents are used for the SERVOPACKs.

2.3.2 SERVOPACK External Dimensions

Base-mounted SERVOPACKs

- Three-phase, 200 VAC: SGD7S-R70A, -R90A, and -1R6A

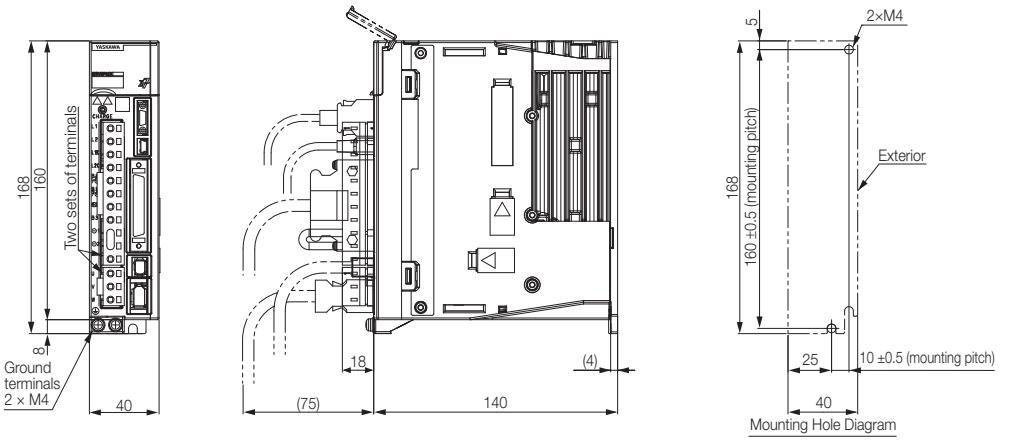

Approx. mass: 0.9 kg
Unit: mm

- Three-phase, 200 VAC: SGD7S-2R8A; Single-phase, 100 VAC: SGD7S-R70F, -R90F, and -2R1F

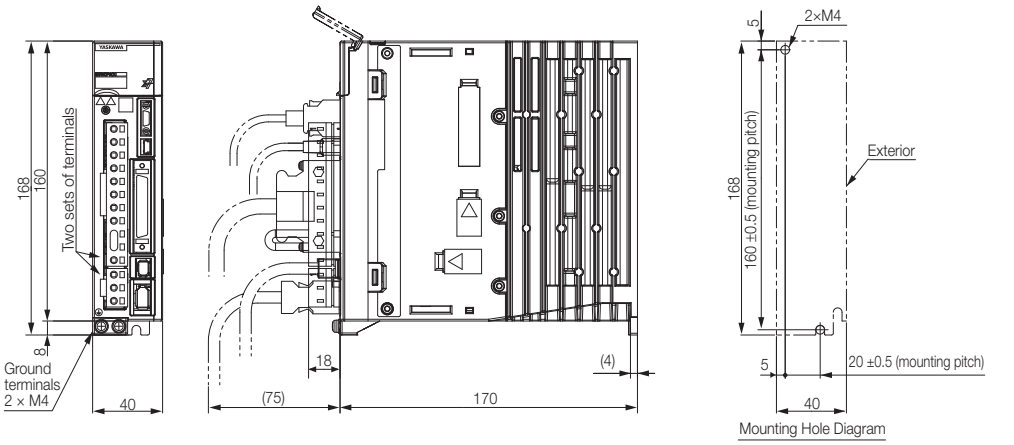

Approx. mass: 1.1 kg
Unit: mm

- Three-phase, 200 VAC: SGD7S-3R8A, -5R5A, and -7R6A; Single-phase, 100 VAC: SGD7S-2R8F

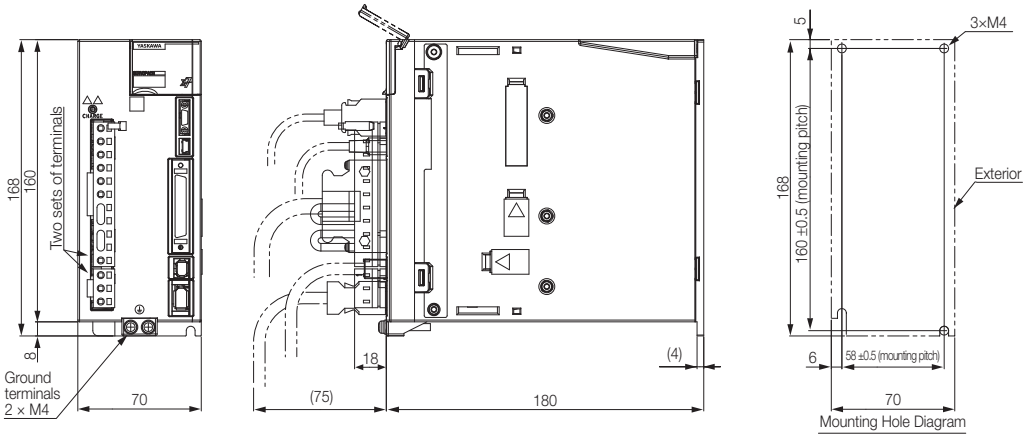

Approx. mass:
SGD7S-3R8A, -5R5A, -7R6A: 1.6 kg
SGD7S-2R8F: 1.5 kg
Unit: mm

- Three-phase, 200 VAC: SGD7S-120A

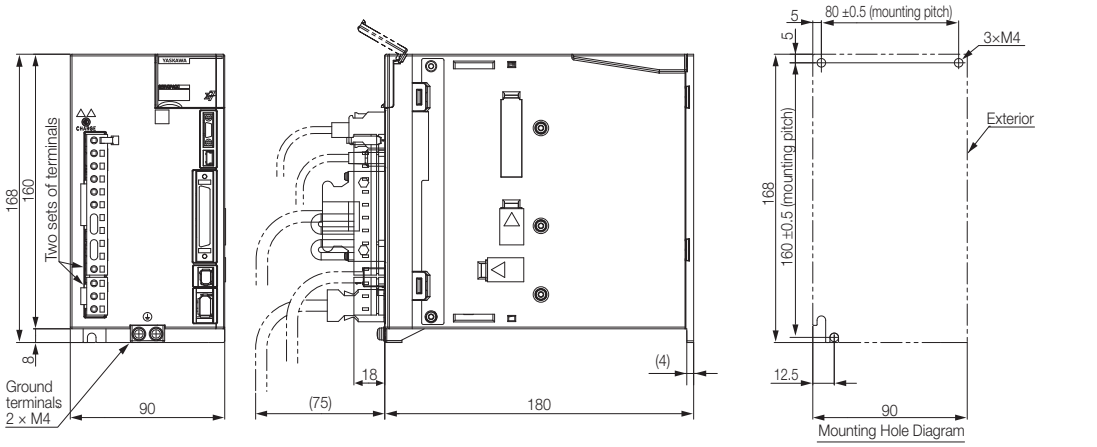

Approx. mass: 2.2 kg
Unit: mm

- Three-phase, 200 VAC: SGD7S-180A and -200A; Single-phase, 200 VAC: SGD7S-120A00A008

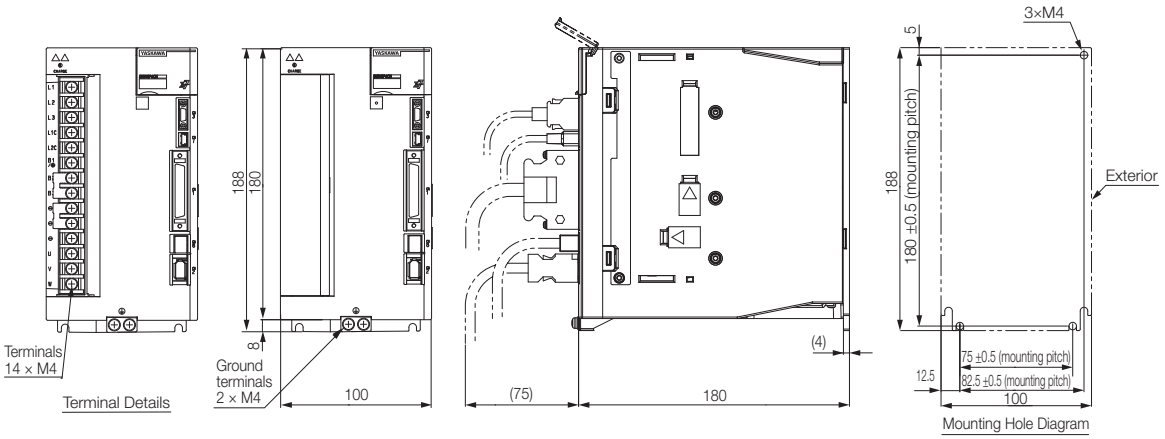

Approx. mass: 2.7 kg
Unit: mm

- Three-phase, 200 VAC: SGD7S-330A

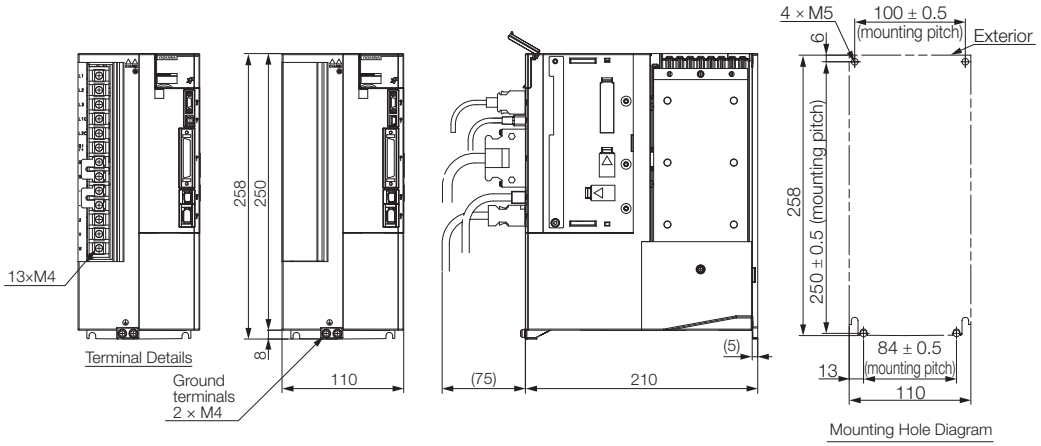

Approx. Mass: 4.4 kg
Unit: mm

- Three-phase, 200 VAC: SGD7S-470A and -550A

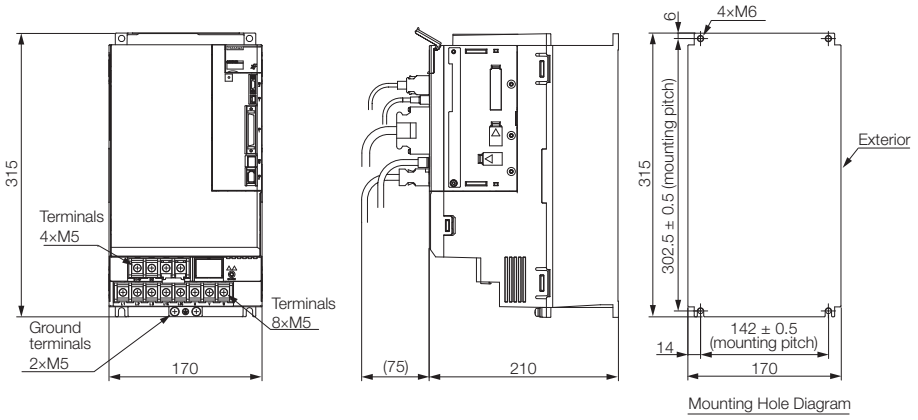

Approx. Mass: 8.2 kg
Unit: mm

- Three-phase, 200 VAC: SGD7S-590A and -780A

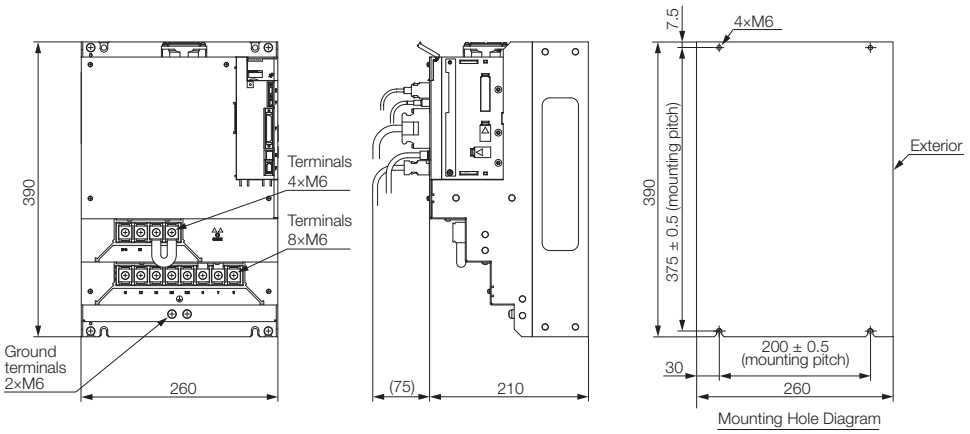

Approx. Mass: 15.5 kg
Unit: mm

Rack-mounted SERVOPACKs

Hardware Option Code: 001

- Three-phase, 200 VAC: SGD7S-R70A, -R90A, and -1R6A

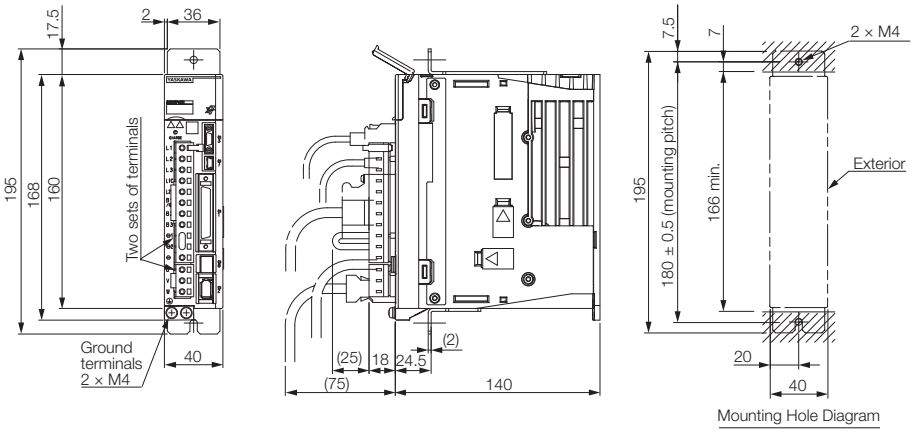

Approx. mass: 1.0 kg
Unit: mm

- Three-phase, 200 VAC: SGD7S-2R8A; Single-phase, 100 VAC: SGD7S-R70F, -R90F, and -2R1F

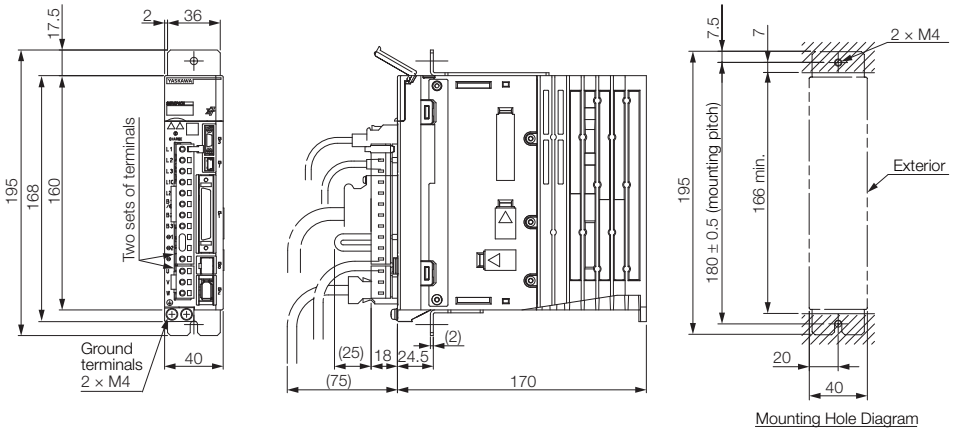

Approx. mass: 1.2 kg
Unit: mm

- Three-phase, 200 VAC: SGD7S-3R8A, -5R5A, and -7R6A; Single-phase, 100 VAC: SGD7S-2R8F

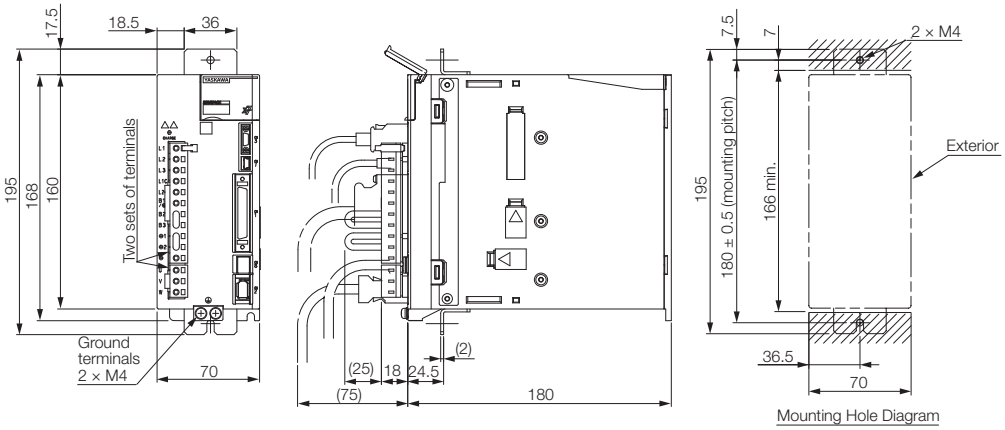

Approx. mass:
SGD7S-3R8A, -5R5A, -7R6A: 1.7 kg
SGD7S-2R8F: 1.6 kg
Unit: mm

- Three-phase, 200 VAC: SGD7S-120A

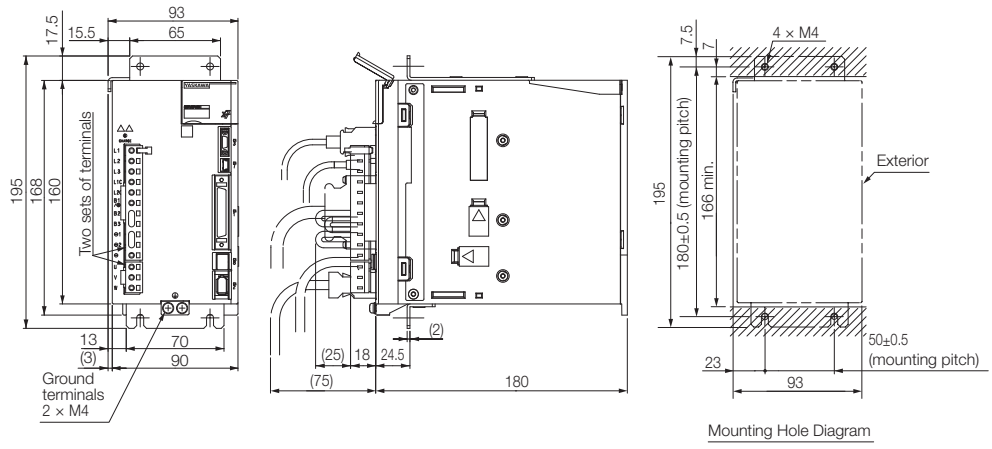

Approx. mass: 2.3 kg
Unit: mm

- Three-phase, 200 VAC: SGD7S-180A and -200A

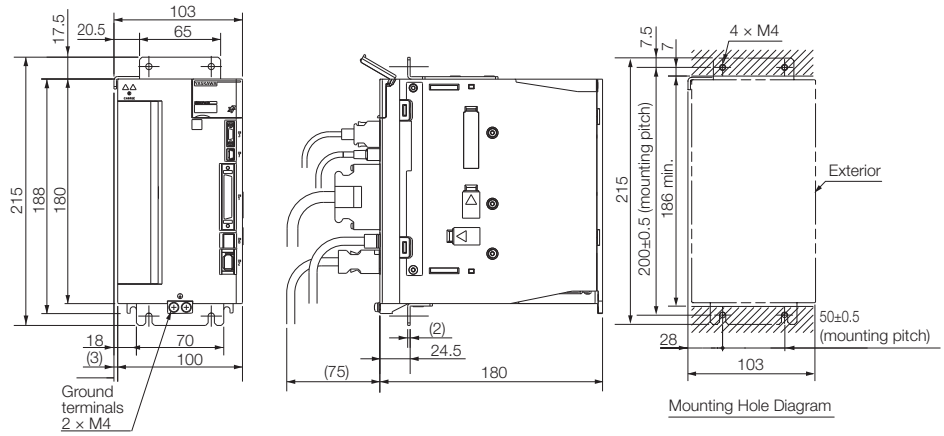

Approx. mass: 2.8 kg
Unit: mm

- Three-phase, 200 VAC: SGD7S-330A

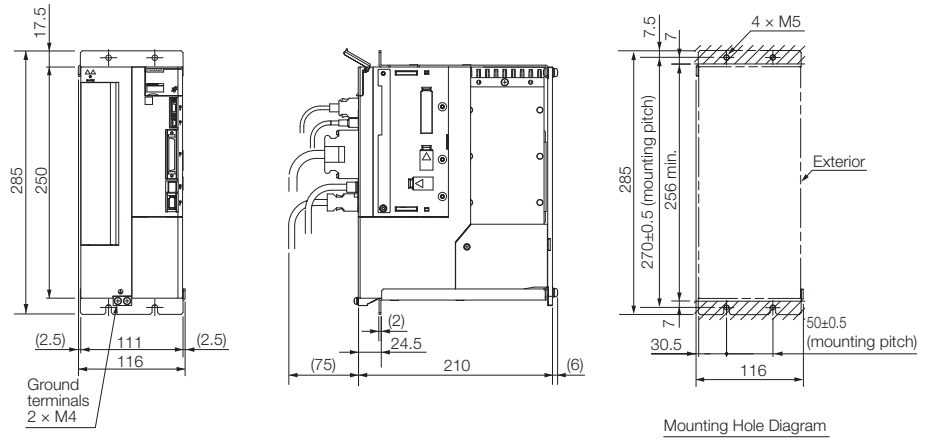

Approx. mass: 4.9 kg
Unit: mm

Duct-ventilated SERVOPACKs

Hardware Option Code: 001

- Three-phase, 200 VAC: SGD7S-470A and -550A

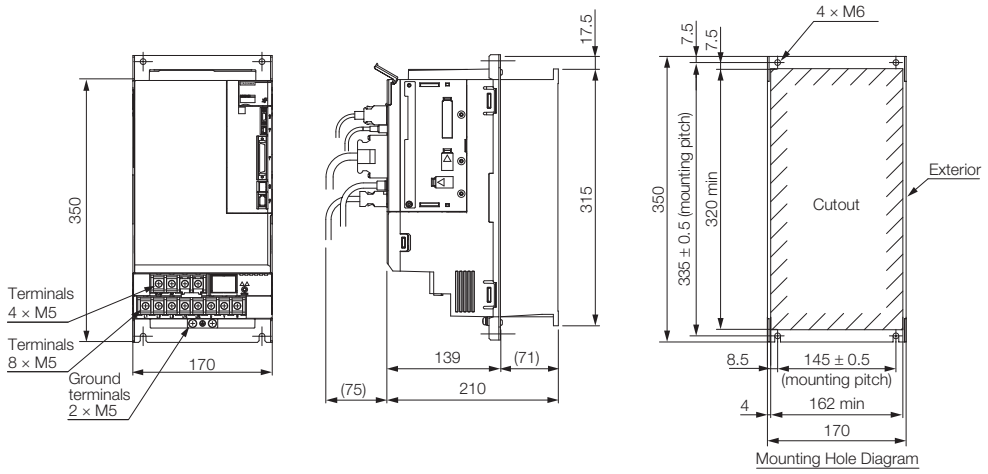

Approx. mass: 8.4 kg
Unit: mm

- Three-phase, 200 VAC: SGD7S-590A and -780A

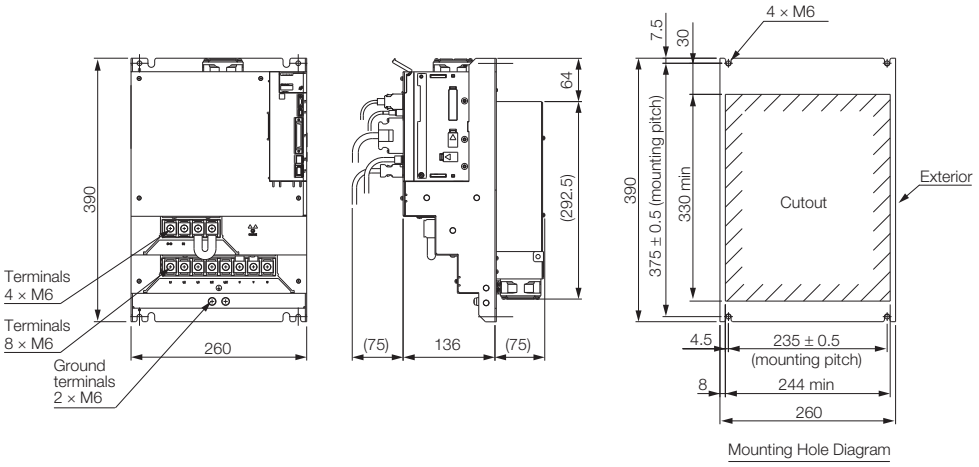

Approx. mass: 13.8 kg
Unit: mm

2.4 Examples of Standard Connections between SERVOPACKs and Peripheral Devices

- Rotary Servomotors

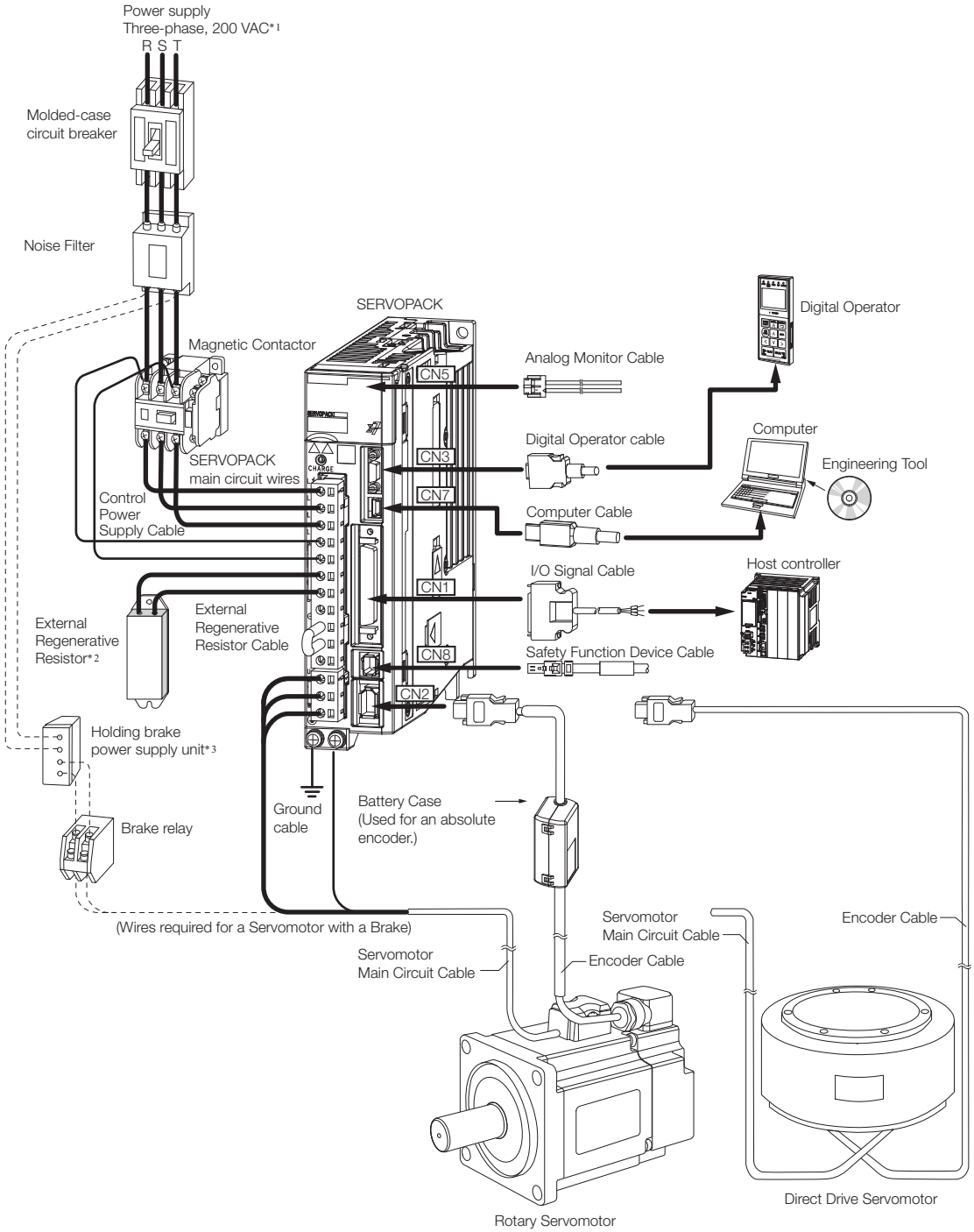

*1. This example is for a SERVOPACK with a three-phase, 200-VAC power supply input. The pin layout of the main circuit connector depends on the voltage.

*2. External Regenerative Resistors are not provided by Yaskawa.

*3. The power supply for the holding brake is not provided by Yaskawa. Select a power supply based on the holding brake specifications.
If you use a 24-V brake, install a separate power supply for the 24-VDC power supply from other power supplies, such as the one for the I/O signals of the CN1 connector.
If the power supply is shared, the I/O signals may malfunction.

- Linear Servomotor

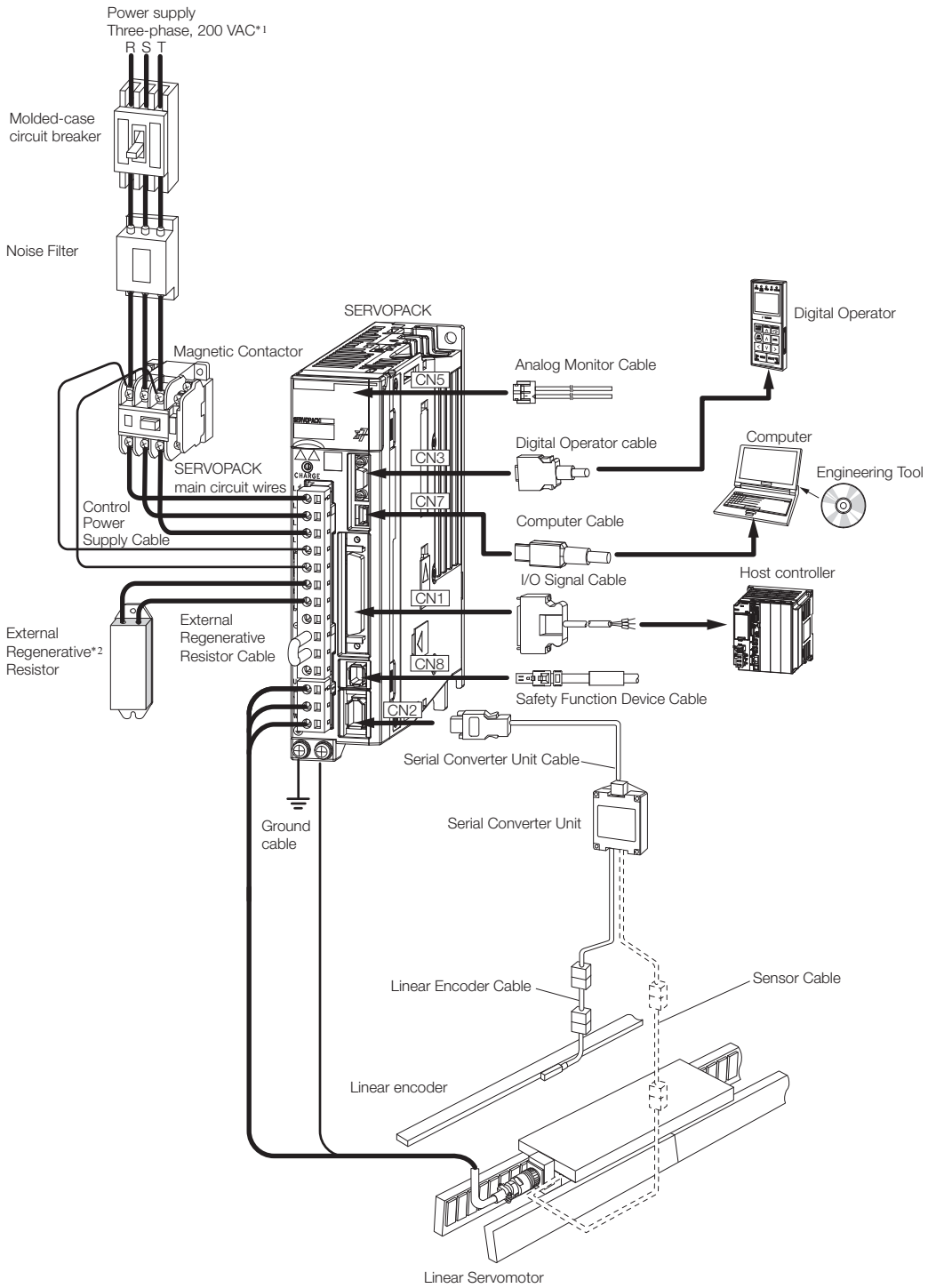

*1. This example is for a SERVOPACK with a three-phase, 200-VAC power supply input. The pin layout of the main circuit connector depends on the voltage.

*2. External Regenerative Resistors are not provided by Yaskawa.

SERVOPACK Installation

3

This chapter provides information on installing SERVOPACKs in the required locations.

3.1 Installation Precautions 3-2

3.2 Mounting Types and Orientation 3-3

3.3 Mounting Hole Dimensions 3-4

3.4 Mounting Interval 3-6

3.4.1 Installing One SERVOPACK in a Control Panel . . 3-6

3.4.2 Installing More Than One SERVOPACK in a Control Panel 3-6

3.5 Monitoring the Installation Environment . . . 3-7

3.6 Derating Specifications 3-8

3.7 EMC Installation Conditions 3-9

3.1 Installation Precautions

Refer to the following section for the ambient installation conditions.
☞ *2.1.3 Specifications* on page 2-7

■ Installation Near Sources of Heat

Implement measures to prevent temperature increases caused by radiant or convection heat from heat sources so that the ambient temperature of the SERVOPACK meets the ambient conditions.

■ Installation Near Sources of Vibration

Install a vibration absorber on the mounting surface of the SERVOPACK so that the SERVOPACK will not be subjected to vibration.

■ Other Precautions

Do not install the SERVOPACK in a location subject to high temperatures, high humidity, water drops, cutting oil, excessive dust, excessive dirt, excessive iron powder, corrosive gasses, or radioactivity.

3.2 Mounting Types and Orientation

The SERVOPACKs come in the following mounting types: base-mounted, rack-mounted, and duct-ventilated types. Regardless of the mounting type, mount the SERVOPACK vertically, as shown in the following figures.

Also, mount the SERVOPACK so that the front panel is facing toward the operator.

Note: Prepare two to four mounting holes for the SERVOPACK and mount it securely in the mounting holes. (The number of mounting holes depends on the capacity of the SERVOPACK.)

- Base-mounted SERVOPACK

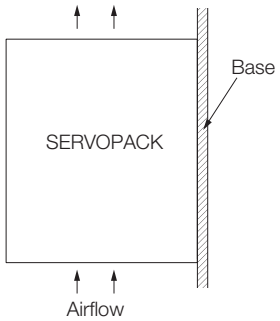

- Rack-mounted SERVOPACK

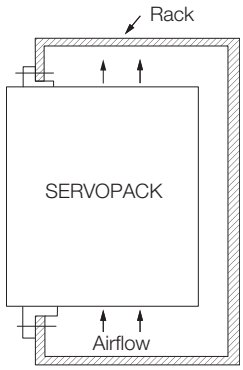

- Duct-ventilated SERVOPACK

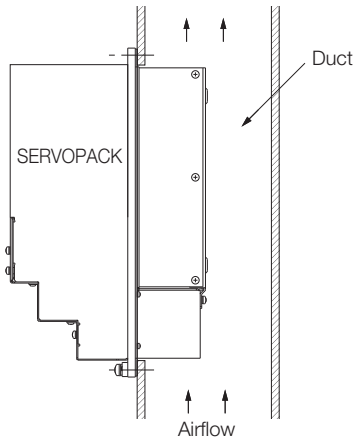

3.3 Mounting Hole Dimensions

Use mounting holes to securely mount the SERVOPACK to the mounting surface.

Note: To mount the SERVOPACK, you will need to prepare a screwdriver that is longer than the depth of the SERVOPACK.

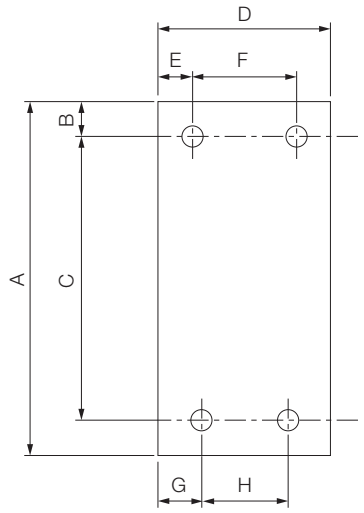

◆ Σ-7-series Mounting Hole Dimensions

SERVOPACK Model		Dimensions (mm)								Screw Size	Number of Screws
		A	B	C	D	E	F	G	H		
SGD7S-	R70A, R90A, 1R6A	168	5	160±0.5	40	35	–	25	–	M4	2
	2R8A, R70F, R90F, 2R1F	168	5	160±0.5	40	5	–	25	–	M4	2
	3R8A, 5R5A, 7R6A, 2R8F	168	5	160±0.5	70	6	58±0.5	64	–	M4	3
	120A	168	5	160±0.5	90	5	80±0.5	12.5	–	M4	3
	180A, 200A, 120A□□□008	188	5	180±0.5	100	95	–	12.5	75±0.5	M4	3
	330A	258	6	250±0.5	110	5	100±0.5	13	84±0.5	M5	4
	470A, 550A	315	6	302.5±0.5	170	14	142±0.5	14	142±0.5	M6	4
	590A, 780A	390	7.5	375±0.5	260	30	200±0.5	30	200±0.5	M6	4

◆ Σ-V-series-Compatible Mounting Hole Dimensions

If you are replacing a Σ-V-Series SERVOPACK with a Σ-7-Series SERVOPACK, you can also use the mounting holes that were used for the Σ-V-Series SERVOPACK. Refer to the following table.

SERVOPACK Model		Dimensions (mm)								Screw Size	Number of Screws
		A	B	C	D	E	F	G	H		
SGD7S-	R70A, R90A, 1R6A	168	5	150±0.5	40	35	–	35	–	M4	2
	2R8A, R70F, R90F, 2R1F	168	5	150±0.5	40	5	–	35	–	M4	2
	3R8A, 5R5A, 7R6A, 2R8F	168	5	150±0.5	70	6	58±0.5	6	–	M4	3
	120A	168	5	150±0.5	90	5	80±0.5	5	–	M4	3
	180A, 200A, 120A□□□008	188	5	170±0.5	100	95	–	5	90±0.5	M4	3
	330A	250	6	238.5±0.5	110	5	100±0.5	5	100±0.5	M5	4
	470A, 550A, 590A, 780A	A special attachment is required. Contact your Yaskawa representative for details.									

3.4 Mounting Interval

3.4.1 Installing One SERVOPACK in a Control Panel

Provide the following spaces around the SERVOPACK.

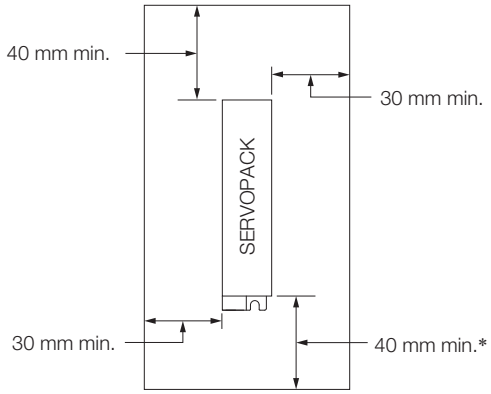

* For this dimension, ignore items protruding from the main body of the SERVOPACK.

3.4.2 Installing More Than One SERVOPACK in a Control Panel

When multiple SERVOPACKs are installed close together in an enclosed space, natural convection may provide insufficient air circulation to distribute heat uniformly through the space, resulting in the air surrounding the SERVOPACKs to locally exceed the surrounding air temperature range. In this case, you must take measures to disperse the localized hot spots, such as by using fans. When using fans, install them as shown below.

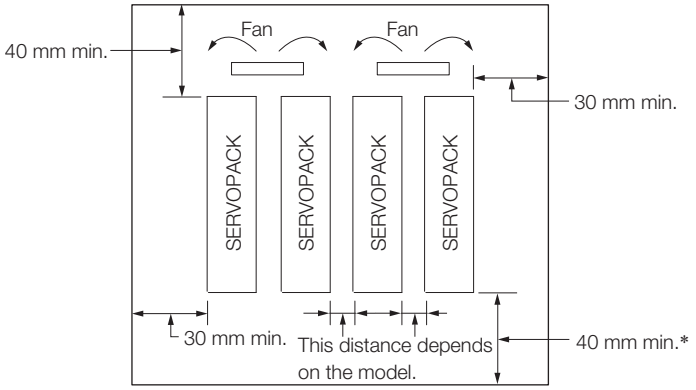

* For this dimension, ignore items protruding from the main body of the SERVOPACK.

The space required on the right side of a SERVOPACK (when looking at the SERVOPACK from the front) depends on the SERVOPACK models. Refer to the following table.

SERVOPACK Model		Space on Right Side	Cooling Fan Installation Conditions
			10 mm above SERVOPACK's Top Surface
SGD7S-	R70A, R90A, 1R6A, 2R8A, 3R8A, 5R5A, 7R6A, R70F, R90F, 2R1F, 2R8F	1 mm min.	Air speed: 0.5 m/s min.
	120A, 180A, 200A, 330A, 470A, 550A, 590A, 780A	10 mm min.	Air speed: 0.5 m/s min.

Note: When option modules are mounted on SERVOPACKs, the SERVOPACK installation conditions will depend on the option modules that are mounted. For details, refer to the manual for option module.

3.5 Monitoring the Installation Environment

You can use the SERVOPACK Installation Environment Monitor parameter to check the operating conditions of the SERVOPACK in the installation environment.

You can check the SERVOPACK installation environment monitor with either of the following methods.

- Using the SigmaWin+: ***Life Monitor - Installation Environment Monitor - SERVOPACK***
- Panel Operator or Digital Operator: Un025 (Installation Environment Monitor [%])

Implement one or more of the following actions if the monitor value exceeds 100%.

- Lower the surrounding temperature.
- Decrease the load.

Information

The value of the SERVOPACK Installation Environment Monitor parameter will increase by about 10% for each 10°C increase in the ambient temperature.

Important

Always observe the surrounding air temperature given in the SERVOPACK environment conditions. Even if the monitor value is 100% or lower, you cannot use a SERVOPACK in a location that exceeds the specified surrounding air temperature.

3.6 Derating Specifications

If you use the SERVOPACK at a surrounding air temperature of 55°C to 60°C or at an altitude of 1,000 m to 2,000 m, you must apply the derating rates given in the following graphs.

- SGD7S-R70A, -R90A, -1R6A, -2R8A, -R70F, -R90F, -2R1F, and -2R8F

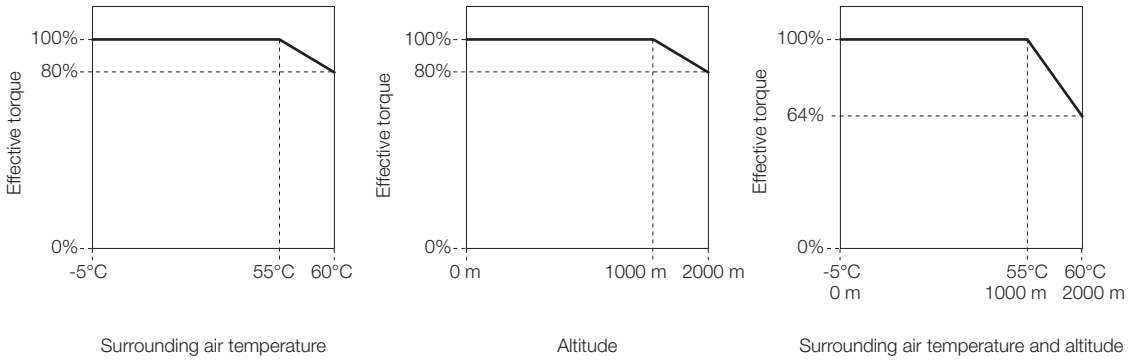

- SGD7S-3R8A, -5R5A, -7R6A, -120A, -180A, -200A, -330A, -470A, -550A, -590A, and -780A

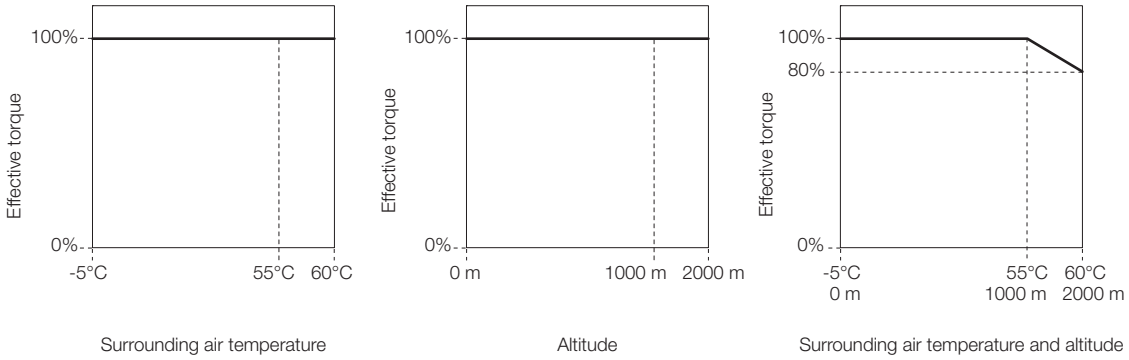

3.7 EMC Installation Conditions

This section gives the recommended installation conditions that were used for EMC certification testing.

The EMC installation conditions that are given here are the conditions that were used to pass testing criteria at Yaskawa. The EMC level may change under other conditions, such as the actual installation structure and wiring conditions. These Yaskawa products are designed to be built into equipment. Therefore, you must implement EMC measures and confirm compliance for the final equipment.

The compliant standards are EN 55011 group 1 class A, EN 61000-6-2, EN 61000-6-4, and EN 61800-3 (category C2, second environment).

⚠ WARNING

- In a domestic environment, this product may cause radio interference in which case supplementary mitigation measures may be required.

⚠ CAUTION

- This equipment is not intended for use in residential environments and may not provide adequate protection to radio reception in such environments.

• Three-Phase, 200 VAC

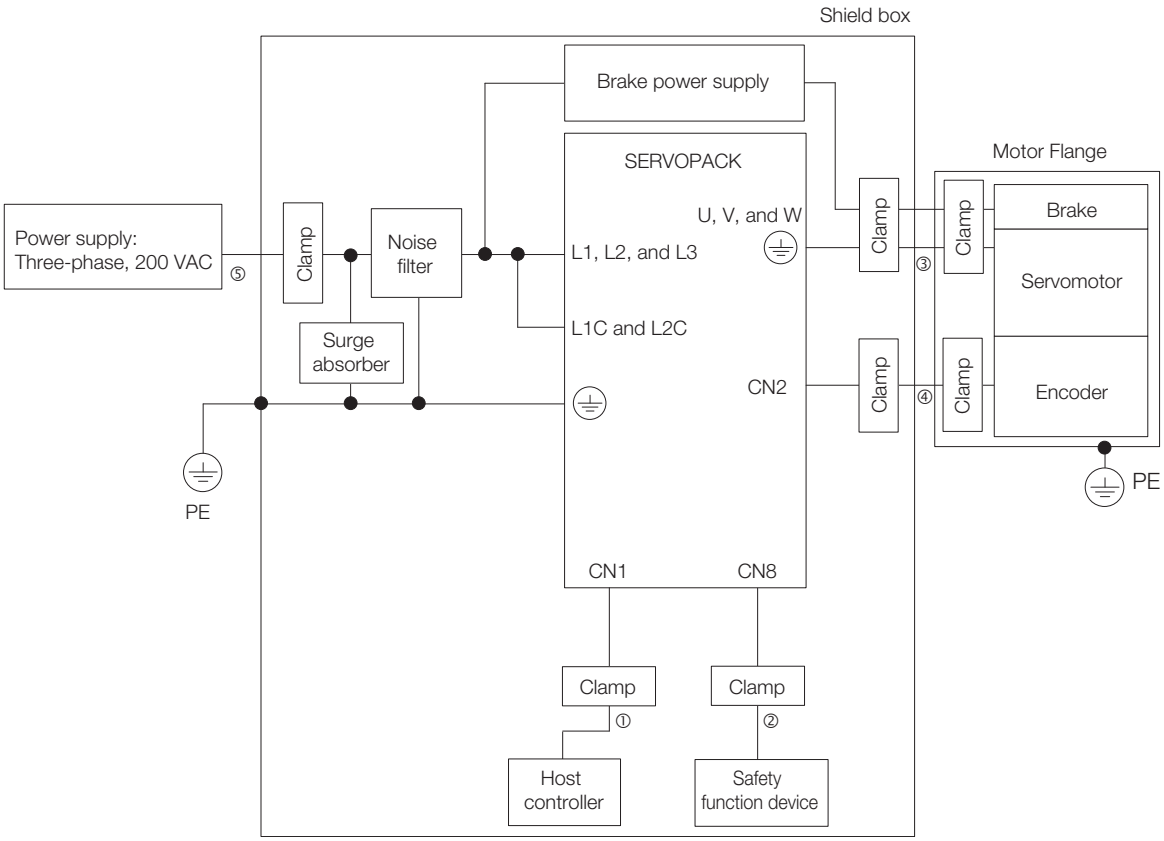

Symbol	Cable Name	Specification
①	I/O Signal Cable	Shielded cable
②	Safety Function Device Cable	Shielded cable
③	Servomotor Main Circuit Cable	Shielded cable
④	Encoder Cable	Shielded cable
⑤	Main Circuit Power Cable	Shielded cable

- Single-Phase, 200 VAC

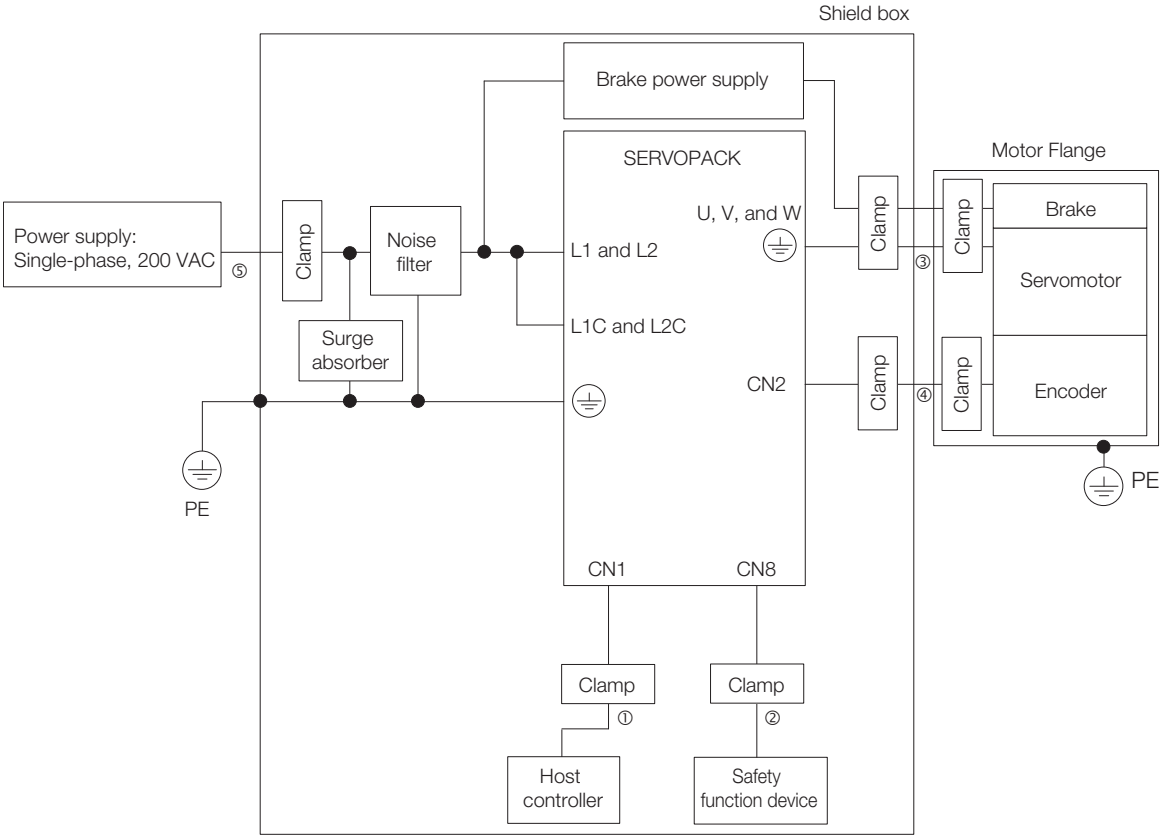

Symbol	Cable Name	Specification
①	I/O Signal Cable	Shielded cable
②	Safety Function Device Cable	Shielded cable
③	Servomotor Main Circuit Cable	Shielded cable
④	Encoder Cable	Shielded cable
⑤	Main Circuit Power Cable	Shielded cable

- Single-Phase, 100 VAC

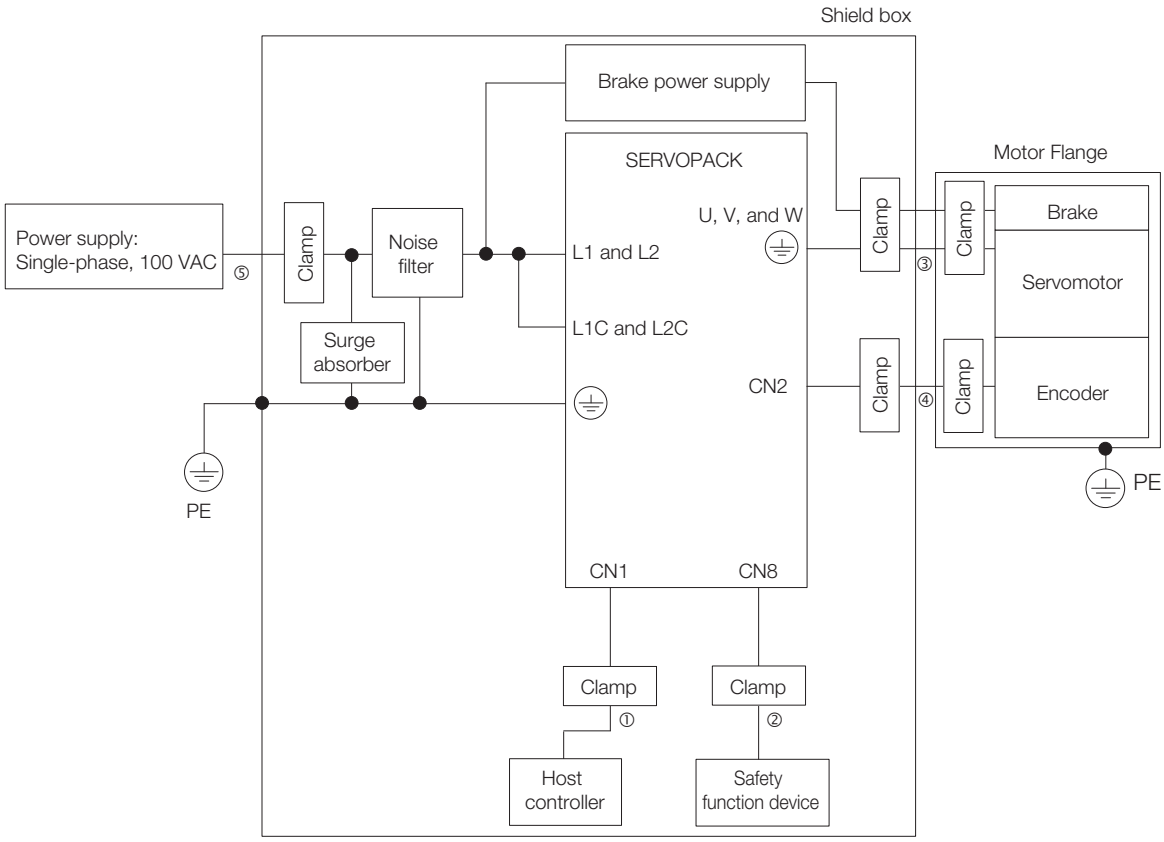

Symbol	Cable Name	Specification
①	I/O Signal Cable	Shielded cable
②	Safety Function Device Cable	Shielded cable
③	Servomotor Main Circuit Cable	Shielded cable
④	Encoder Cable	Shielded cable
⑤	Main Circuit Power Cable	Shielded cable

Wiring and Connecting SERVOPACKs

4

This chapter provides information on wiring and connecting SERVOPACKs to power supplies and peripheral devices.

4.1 Wiring and Connecting SERVOPACKs 4-3

4.1.1 General Precautions 4-3
4.1.2 Countermeasures against Noise 4-5
4.1.3 Grounding 4-8

4.2 Basic Wiring Diagrams 4-9

4.3 Wiring the Power Supply to the SERVOPACK . . 4-11

4.3.1 Terminal Symbols and Terminal Names 4-11
4.3.2 Wiring Procedure for Main Circuit Connector . . 4-14
4.3.3 Power ON Sequence 4-15
4.3.4 Power Supply Wiring Diagrams 4-16
4.3.5 Wiring Regenerative Resistors 4-22
4.3.6 Wiring Reactors for Harmonic Suppression 4-24

4.4 Wiring Servomotors 4-25

4.4.1 Terminal Symbols and Terminal Names 4-25
4.4.2 Pin Arrangement of Encoder Connector (CN2) 4-25
4.4.3 Wiring the SERVOPACK to the Encoder 4-26
4.4.4 Wiring the SERVOPACK to the Holding Brake . . 4-34

4.5 I/O Signal Connections 4-35
4.5.1 I/O Signal Connector (CN1) Names and Functions 4-35
4.5.2 I/O Signal Connector (CN1) Pin Arrangement . . . 4-38
4.5.3 I/O Signal Wiring Examples 4-39
4.5.4 I/O Circuits 4-45

4.6 Connecting Safety Function Signals 4-50
4.6.1 Pin Arrangement of Safety Function Signals (CN8) 4-50
4.6.2 I/O Circuits 4-50

4.7 Connecting the Other Connectors 4-52
4.7.1 Serial Communications Connector (CN3) 4-52
4.7.2 Computer Connector (CN7) 4-52
4.7.3 Analog Monitor Connector (CN5) 4-52

4.1 Wiring and Connecting SERVOPACKs

4.1.1 General Precautions

DANGER

- **Do not change any wiring while power is being supplied.**
  There is a risk of electric shock or injury.

WARNING

- **Wiring and inspections must be performed only by qualified engineers.**
  There is a risk of electric shock or product failure.
- **Check all wiring and power supplies carefully.**
  Incorrect wiring or incorrect voltage application to the output circuits may cause short-circuit failures. If a short-circuit failure occurs as a result of any of these causes, the holding brake will not work. This could damage the machine or cause an accident that may result in death or injury.
- **Connect the AC and DC power supplies to the specified SERVOPACK terminals.**
  - Connect an AC power supply to the L1, L2, and L3 terminals and the L1C and L2C terminals on the SERVOPACK.
  - Connect a DC power supply to the B1/⊕ and ⊖2 terminals and the L1C and L2C terminals on the SERVOPACK.

  There is a risk of failure or fire.
- **If you use a SERVOPACK with the Dynamic Brake Hardware Option, connect an External Dynamic Brake Resistor that is suitable for the machine and equipment specifications to the specified terminals.**
  There is a risk of unexpected operation, machine damage, burning, or injury when an emergency stop is performed.

⚠ CAUTION

- Wait for at least six minutes after turning OFF the power supply (with a SERVOPACK for a 100-VAC power supply input, wait for at least nine minutes) and then make sure that the CHARGE indicator is not lit before starting wiring or inspection work. Do not touch the power supply terminals while the CHARGE lamp is lit because high voltage may still remain in the SERVOPACK even after turning OFF the power supply.
  There is a risk of electric shock.
- Observe the precautions and instructions for wiring and trial operation precisely as described in this document.
  Failures caused by incorrect wiring or incorrect voltage application in the brake circuit may cause the SERVOPACK to fail, damage the equipment, or cause an accident resulting in death or injury.
- Check the wiring to be sure it has been performed correctly.
  Connectors and pin layouts are sometimes different for different models. Always confirm the pin layouts in technical documents for your model before operation.
  There is a risk of failure or malfunction.
- Connect wires to power supply terminals and motor connection terminals securely with the specified methods and tightening torque.
  Insufficient tightening may cause wires and terminal blocks to generate heat due to faulty contact, possibly resulting in fire.
- Use shielded twisted-pair cables or screened unshielded multi-twisted-pair cables for I/O Signal Cables and Encoder Cables.
- The maximum wiring length is 3 m for I/O Signal Cables, and 50 m for Encoder Cables or Servomotor Main Circuit Cables.
- Observe the following precautions when wiring the SERVOPACK's main circuit terminals.
  - Turn ON the power supply to the SERVOPACK only after all wiring, including the main circuit terminals, has been completed.
  - If a connector is used for the main circuit terminals, remove the main circuit connector from the SERVOPACK before you wire it.
  - Insert only one wire per insertion hole in the main circuit terminals.
  - When you insert a wire, make sure that the conductor wire (e.g., whiskers) does not come into contact with adjacent wires.
- Install molded-case circuit breakers and other safety measures to provide protection against short circuits in external wiring.
  There is a risk of fire or failure.

NOTICE

- Whenever possible, use the Cables specified by Yaskawa.
  If you use any other cables, confirm the rated current and application environment of your model and use the wiring materials specified by Yaskawa or equivalent materials.
- Securely tighten cable connector screws and lock mechanisms.
  Insufficient tightening may result in cable connectors falling off during operation.
- Do not bundle power lines (e.g., the Main Circuit Cable) and low-current lines (e.g., the I/O Signal Cables or Encoder Cables) together or run them through the same duct. If you do not place power lines and low-current lines in separate ducts, separate them by at least 30 cm.
  If the cables are too close to each other, malfunctions may occur due to noise affecting the low-current lines.
- Install a battery at either the host controller or on the Encoder Cable.
  If you install batteries both at the host controller and on the Encoder Cable at the same time, you will create a loop circuit between the batteries, resulting in a risk of damage or burning.
- When connecting a battery, connect the polarity correctly.
  There is a risk of battery rupture or encoder failure.

Important

- Use a molded-case circuit breaker or fuse to protect the main circuit. The SERVOPACK connects directly to a commercial power supply; it is not isolated through a transformer or other device. Always use a molded-case circuit breaker or fuse to protect the servo system from accidents involving different power system voltages or other accidents.
- Install an earth leakage breaker. The SERVOPACK does not have a built-in ground fault protective circuit. To configure a safer system, install a ground fault detector against overloads and short-circuiting, or install a ground fault detector combined with a molded-case circuit breaker.
- Do not turn the power supply ON and OFF more than necessary.
  - Do not use the SERVOPACK for applications that require the power supply to turn ON and OFF frequently. Such applications will cause elements in the SERVOPACK to deteriorate.
  - After you have started actual operation, allow at least one hour between turning the power supply ON and OFF (as a guideline).

To ensure safe, stable application of the servo system, observe the following precautions when wiring.

- Use the cables specified by Yaskawa. Design and arrange the system so that each cable is as short as possible.
  Refer to the following manual or catalog for information on the specified cables.
  AC Servo Drives Σ-7 Series (Catalog No.: KAEP S800001 23)
  Σ-7-Series Peripheral Device Selection Manual (Manual No.: SIEP S800001 32)
- The signal cable conductors are as thin as 0.2 mm^2 or 0.3 mm^2. Do not subject them to excessive bending stress or tension.

4.1.2 Countermeasures against Noise

Important

The SERVOPACK is designed as an industrial device. It therefore provides no measures to prevent radio interference. The SERVOPACK uses high-speed switching elements in the main circuit. Therefore peripheral devices may be affected by switching noise.
If the equipment is to be used near private houses or if radio interference is a problem, take countermeasures against noise.

The SERVOPACK uses microprocessors. Therefore, it may be affected by switching noise from peripheral devices.

To prevent the noise from the SERVOPACK or the peripheral devices from causing malfunctions of any devices, take the following countermeasures against noise as required.

- Install the input reference device and Noise Filter as close to the SERVOPACK as possible.
- Always install a Surge Absorber for relays, solenoids, and Magnetic Contactor coils.
- Do not place the following cables in the same duct or bundle them together. Also, separate the cables from each other by at least 30 cm.
  •Main Circuit Cables and I/O Signal Cables
  •Main Circuit Cables and Encoder Cables
- Do not share the power supply with an electric welder or electrical discharge machine. If the SERVOPACK is placed near a high-frequency generator, install Noise Filters on the input side on the Main Circuit Power Supply Cable and Control Power Supply Cable even if the same power supply is not shared with the high-frequency generator. Refer to the following section for information on connecting Noise Filters.
  Noise Filters on page 4-6
- Implement suitable grounding measures. Refer to the following section for information on grounding measures.
  4.1.3 Grounding on page 4-8

Noise Filters

You must attach Noise Filters in appropriate places to protect the SERVOPACK from the adverse effects of noise. The following is an example of wiring for countermeasures against noise.

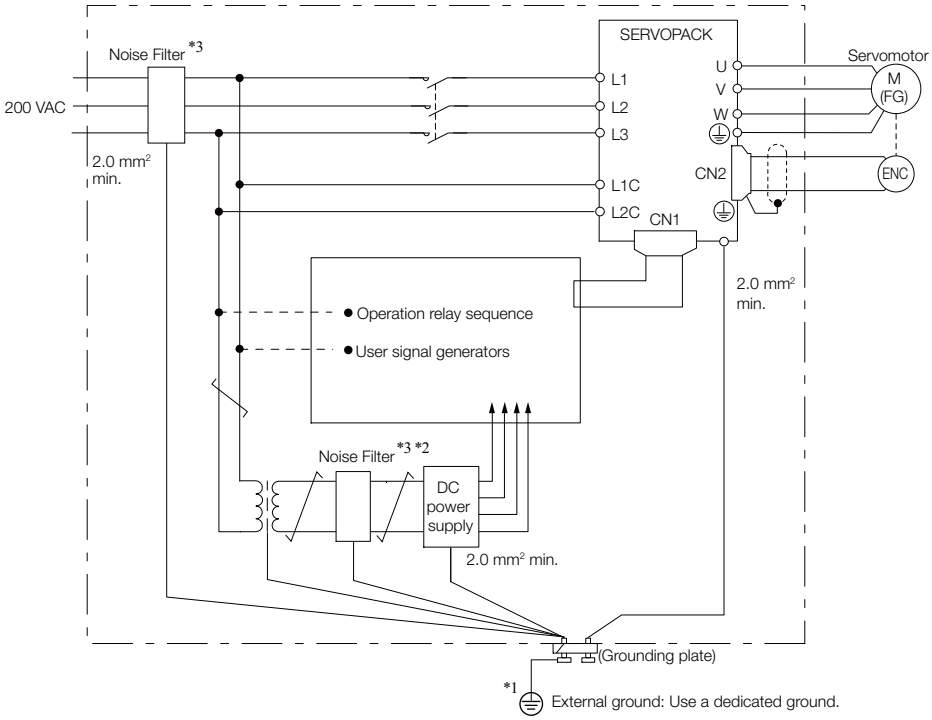

*1. For the ground wire, use a wire with a thickness of at least 2.0 mm² (preferably, flat braided copper wire).

*2. Whenever possible, use twisted-pair wires to wire all connections marked with ⊿.

*3. Refer to the following section for precautions when using Noise Filters.
☞ *Noise Filter Wiring and Connection Precautions* on page 4-7

Noise Filter Wiring and Connection Precautions

Always observe the following precautions when wiring or connecting Noise Filters.

- Separate input lines from output lines. Do not place input lines and output lines in the same duct or bundle them together.

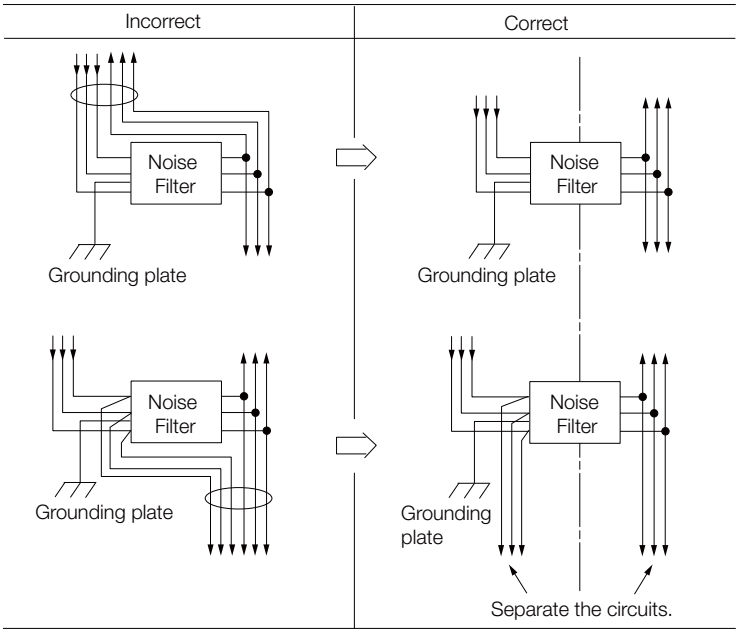

- Separate the Noise Filter ground wire from the output lines. Do not place the Noise Filter ground wire, output lines, and other signal lines in the same duct or bundle them together.

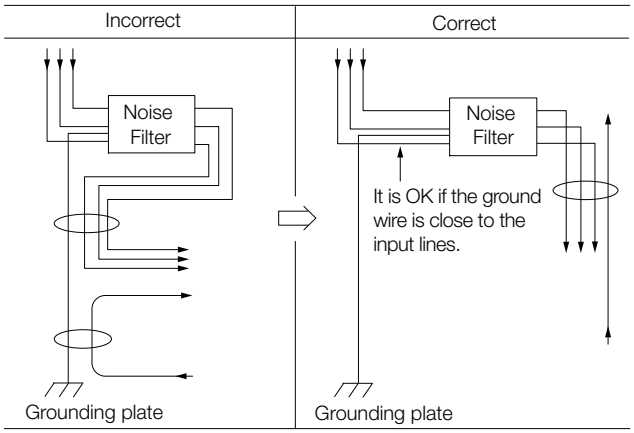

- Connect the Noise Filter ground wire directly to the grounding plate. Do not connect the Noise Filter ground wire to other ground wires.

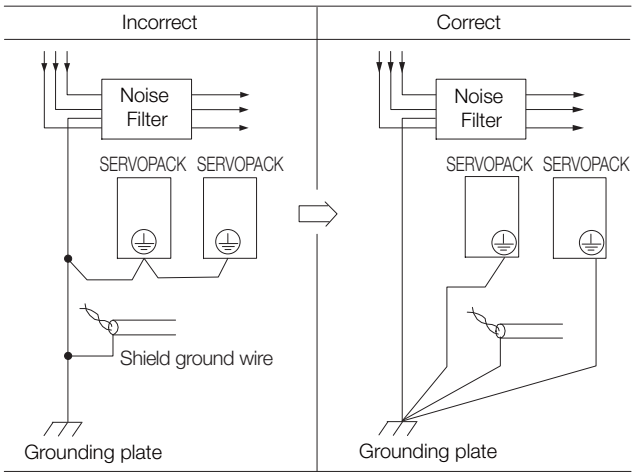

- If a Noise Filter is located inside a control panel, first connect the Noise Filter ground wire and the ground wires from other devices inside the control panel to the grounding plate for the control panel, then ground the plate.

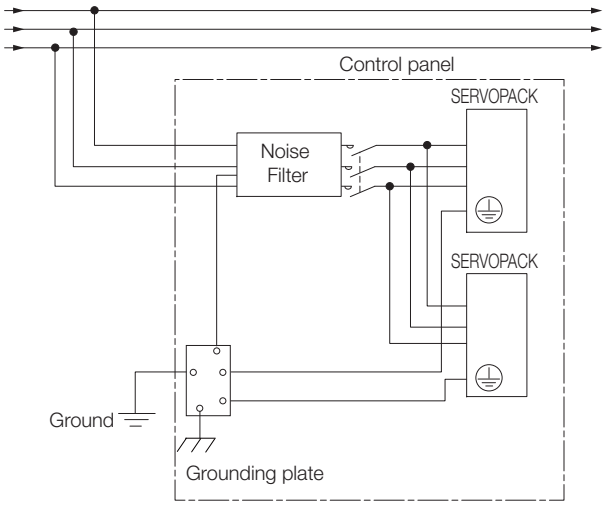

4.1.3 Grounding

Implement grounding measures as described in this section. Implementing suitable grounding measures will also help prevent malfunctions, which can be caused by noise.

Observe the following precautions when wiring the ground cable.

- Ground the SERVOPACK to a resistance of 100 Ω or less.
- Be sure to ground at one point only.
- Ground the Servomotor directly if the Servomotor is insulated from the machine.

Motor Frame Ground or Motor Ground

If you ground the Servomotor through the machine, a current resulting from switching noise can flow from the main circuit of the SERVOPACK through the stray capacitance of the Servomotor. To prevent this, always connect the FG terminal of the Servomotor Main Circuit Cable connected to the Servomotor to the ground terminal ⏚ on the SERVOPACK. Also be sure to ground the ground terminal ⏚. Always connect the shield wire of the Encoder Cable connected to the Servomotor to the connector case (shell).

Ground both the Moving Coil and Magnetic Way of a Linear Servomotor.

Noise on I/O Signal Cables

If noise enters the I/O Signal Cable, connect the shield of the I/O Signal Cable to the connector shell to ground it. If the Servomotor Main Circuit Cable is placed in a metal conduit, ground the conduit and its junction box. For all grounding, ground at one point only.

4.2 Basic Wiring Diagrams

This section provide the basic wiring diagrams. Refer to the reference sections given in the diagrams for details.

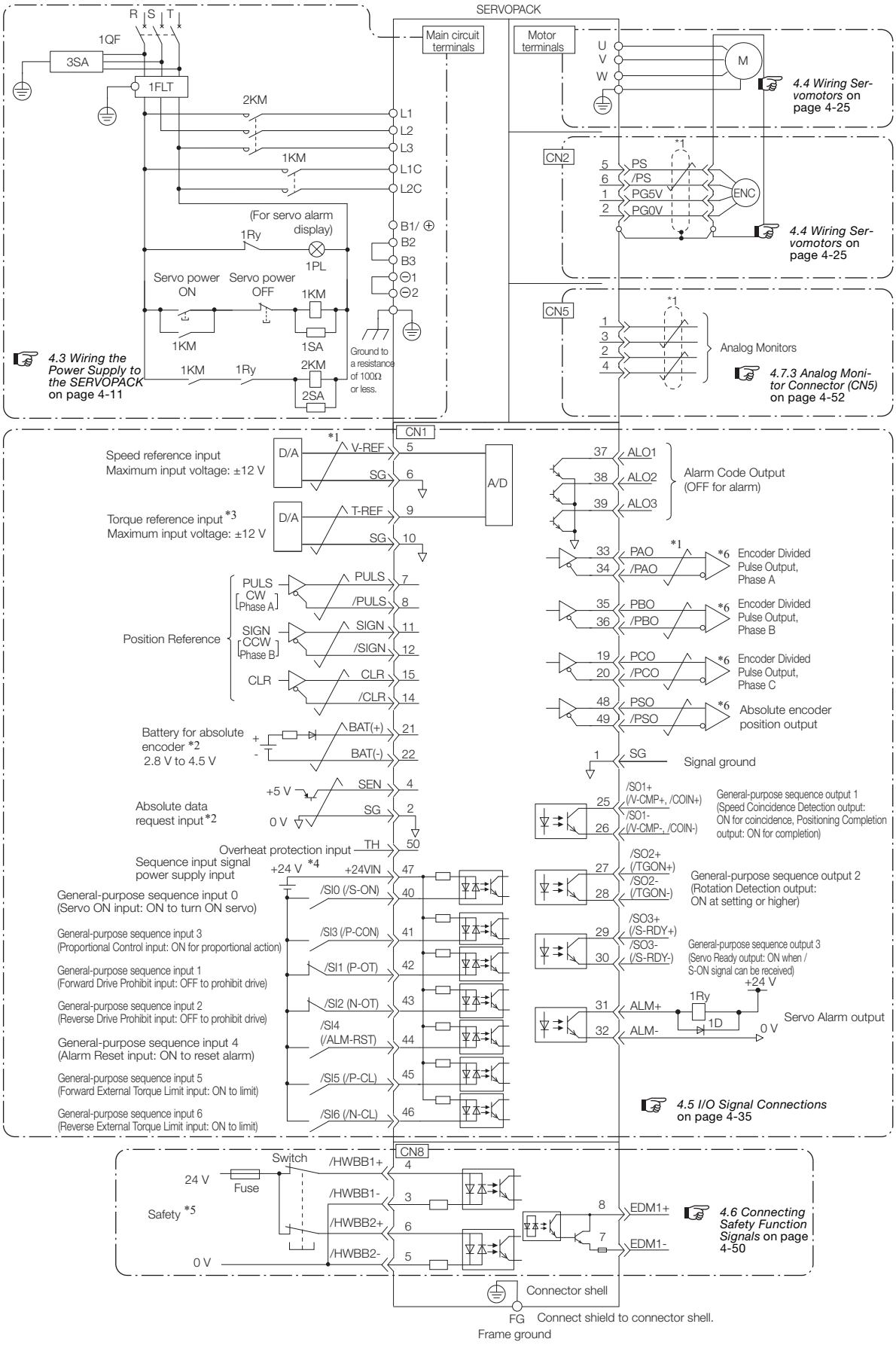

*1. represents twisted-pair wires.

*2. Connect these when using an absolute encoder. If the Encoder Cable with a Battery Case is connected, do not connect a backup battery.

*3. You can enable this function with a parameter setting.

*4. The 24-VDC power supply is not provided by Yaskawa. Use a 24-VDC power supply with double insulation or reinforced insulation.

*5. Refer to the following chapter if you use a safety function device.

☞ *Chapter 11 Safety Functions*

If you do not use the safety function, insert the Safety Jumper Connector (provided as an accessory) into CN8 when you use the SERVOPACK.

*6. Always use line receivers to receive the output signals.

Note: 1. If you use a 24-V brake, install a separate power supply for the 24-VDC power supply from other power supplies, such as the one for the I/O signals of the CN1 connector. If the power supply is shared, the I/O signals may malfunction.

2. Default settings are given in parentheses.

4.3 Wiring the Power Supply to the SERVOPACK

Refer to the following manual or catalog for information on cables and peripheral devices.

- AC Servo Drives Σ-7 Series (Catalog No.: KAEP S800001 23)
- Σ-7-Series Peripheral Device Selection Manual (Manual No.: SIEP S800001 32)

4.3.1 Terminal Symbols and Terminal Names

Use the main circuit connector on the SERVOPACK to wire the main circuit power supply and control circuit power supply to the SERVOPACK.

⚠ CAUTION

- Wire all connections correctly according to the following table and specified reference information. There is a risk of SERVOPACK failure or fire if incorrect wiring is performed.

The SERVOPACKs have the following four types of main circuit power supply input specifications.

Information
1. For the single-phase, 100 VAC power supply input specification, only a single-phase AC power supply can be connected to the control power supply terminals.
2. For the other main circuit power supply input specifications, excluding the single-phase, 100 VAC power supply input specification, a single-phase AC power supply or a DC power supply can be connected to the control power supply terminals.

- Three-Phase, 200-VAC Power Supply Input

Terminal Symbols	Terminal Name	Specifications and Reference	
L1, L2, L3	Main circuit power supply input terminals for AC power supply input	Three-phase, 200 VAC to 240 VAC, -15% to +10%, 50 Hz/60 Hz	
L1C, L2C	Control power supply terminals	AC power supply	Single-phase, 200 VAC to 240 VAC, -15% to +10%, 50 Hz/60 Hz
		DC power supply	L1C: 270 VDC to 324 VDC, -15% to +10%, L2C: 0 VDC or L2C: 270 VDC to 324 VDC, -15% to +10%, L1C: 0 VDC
B1/⊕, B2, B3	Regenerative Resistor terminals	☞ *4.3.5 Wiring Regenerative Resistors* on page 4-22	
		■ For SGD7S-R70A, -R90A, -1R6A, and -2R8A If the regenerative capacity is insufficient, connect an External Regenerative Resistor between B1/⊕ and B2. The External Regenerative Resistor is not included. Obtain it separately.	
		■ For SGD7S-3R8A,- 5R5A, -7R6A, -120A, -180A, -200A, and -330A If the internal regenerative resistor is insufficient, remove the lead or short bar between B2 and B3 and connect an External Regenerative Resistor between B1/⊕ and B2. The External Regenerative Resistor is not included. Obtain it separately.	
		■ For SGD7S-470A, -550A, -590A, and -780A Connect a Regenerative Resistor Unit between B1/⊕ and B2. Obtain a Regenerative Resistor Unit separately. These models do not have a B3 terminal.	
⊖1, ⊖2	DC Reactor terminals for power supply harmonic suppression	☞ *4.3.6 Wiring Reactors for Harmonic Suppression* on page 4-24	
		These terminals are used to connect a DC Reactor for power supply harmonic suppression.	
⊖	–	None. (Do not connect anything to this terminal.)	

- Single-Phase, 200-VAC Power Supply Input

Terminal Symbols	Terminal Name	Specifications and Reference	
L1, L2	Main circuit power supply input terminals for AC power supply input	Single-phase, 200 VAC to 240 VAC, -15% to +10%, 50 Hz/60 Hz	
L1C, L2C	Control power supply terminals	AC power supply	Single-phase, 200 VAC to 240 VAC, -15% to +10%, 50 Hz/60 Hz
		DC power supply	L1C: 270 VDC to 324 VDC, -15% to +10%, L2C: 0 VDC or L2C: 270 VDC to 324 VDC, -15% to +10%, L1C: 0 VDC
B1/⊕, B2, B3	Regenerative Resistor terminals	*4.3.5 Wiring Regenerative Resistors* on page 4-22	
		■ For SGD7S-R70A, -R90A, -1R6A, and -2R8A If the regenerative capacity is insufficient, connect an External Regenerative Resistor between B1/⊕ and B2. The External Regenerative Resistor is not included. Obtain it separately.	
		■ For SGD7S-5R5A and 120A□0A008 If the internal regenerative resistor is insufficient, remove the lead or short bar between B2 and B3 and connect an External Regenerative Resistor between B1/⊕ and B2. The External Regenerative Resistor is not included. Obtain it separately.	
⊖1, ⊖2	DC Reactor terminals for power supply harmonic suppression	*4.3.6 Wiring Reactors for Harmonic Suppression* on page 4-24	
		These terminals are used to connect a DC Reactor for power supply harmonic suppression.	
L3, ⊖	–	None. (Do not connect anything to these terminals.)	

You can use a single-phase, 200-VAC power supply input with the following models.

- SGD7S-R70A, -R90A, -1R6A, -2R8A, -5R5A

If you use a single-phase, 200-VAC power supply input for the SERVOPACK's main circuit power supply, set parameter Pn00B to n.□1□□ (Use a three-phase power supply input as a single-phase power supply input). Refer to the following section for details.

5.3.2 Single-phase AC Power Supply Input/Three-phase AC Power Supply Input Setting on page 5-15

Information You do not need to change the setting of Pn00B to n.□1□□ (Use a three-phase power supply input as a single-phase power supply input) for a SERVOPACK with a single-phase 200-VAC power supply input (model numbers: SGD7S-120A□□□008).

- DC Power Supply Input

Terminal Symbols	Terminal Name	Specifications and Reference	
L1C, L2C	Control power supply terminals	AC power supply	Single-phase, 200 VAC to 240 VAC, -15% to +10%, 50 Hz/60 Hz
		DC power supply	L1C: 270 VDC to 324 VDC, -15% to +10%, L2C: 0 VDC or L2C: 270 VDC to 324 VDC, -15% to +10%, L1C: 0 VDC
B1/⊕	Main circuit power supply input terminals for DC power supply input	270 VDC to 324 VDC, -15% to +10%	
⊖2		0 VDC	
L1, L2, L3, B2, B3, ⊖1, ⊖	–	None. (Do not connect anything to these terminals.) Note: 1. SGD7S-470A to 780A do not have a B3 terminal. 2. SGD7S-330A to 780A do not have a ⊖ terminal.	

If you use a DC power supply input to the SERVOPACK, make sure to set parameter Pn00E to n.□□□1 (DC power supply input supported) before inputting the power supply. Refer to the following section for details.

5.3.1 AC Power Supply Input/DC Power Supply Input Setting on page 5-14

- Single-Phase, 100-VAC Power Supply Input

Terminal Symbols	Terminal Name	Specifications and Reference
L1, L2	Main circuit power supply input terminals for AC power supply input	Single-phase, 100 VAC to 120 VAC, -15% to +10%, 50 Hz/60 Hz
L1C, L2C	Control power supply terminals	Single-phase, 100 VAC to 120 VAC, -15% to +10%, 50 Hz/60 Hz
B1, B2	Regenerative Resistor terminals	☞ *4.3.5 Wiring Regenerative Resistors* on page 4-22 If the regenerative capacity is insufficient, connect an External Regenerative Resistor between B1/⊕ and B2. The External Regenerative Resistor is not included. Obtain it separately.

You can use a single-phase, 100-VAC power supply input with the following models.
- SGD7S-R70F, -R90F, -2R1F, and -2R8F

4.3.2 Wiring Procedure for Main Circuit Connector

- Required Items

Required Item	Remarks
Spring Opener or Flat-blade Screwdriver	• Spring Opener SERVOPACK accessory (You can also use model 1981045-1 from Tyco Electronics Japan G.K.)
	• Flat-blade screwdriver Commercially available screwdriver with tip width of 3.0 mm to 3.5 mm

1. Remove the main circuit connector and motor connector from the SERVOPACK.

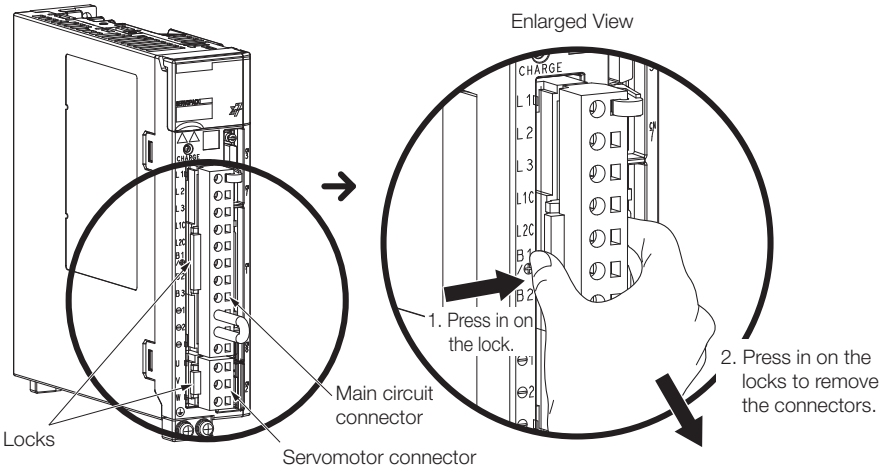

2. Remove the sheath from the wire to connect.

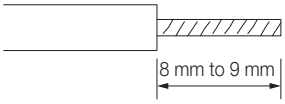

3. Open the wire insertion hole on the terminal connector with the tool. There are the following two ways to open the insertion hole. Use either method.

①Using a Spring Opener	②Using a Flat-blade Screwdriver
Open the insertion hole with the Spring Opener as shown in the figure.	Firmly insert a flat-blade screwdriver into the screwdriver insertion hole to open the wire insertion hole.
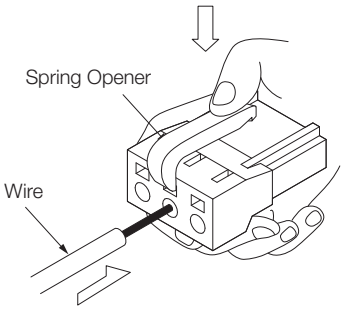	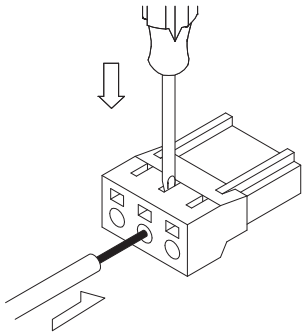

4. Insert the conductor into the wire insertion hole. Then, remove the Spring Opener or flat-blade screwdriver.

5. Make all other connections in the same way.

6. When you have completed wiring, attach the connectors to the SERVOPACK.

4.3.3 Power ON Sequence

Consider the following points when you design the power ON sequence.

- The ALM (Servo Alarm) signal is output for up to five seconds when the control power supply is turned ON. Take this into consideration when you design the power ON sequence, and turn ON the main circuit power supply to the SERVOPACK when the ALM signal is OFF (alarm cleared).

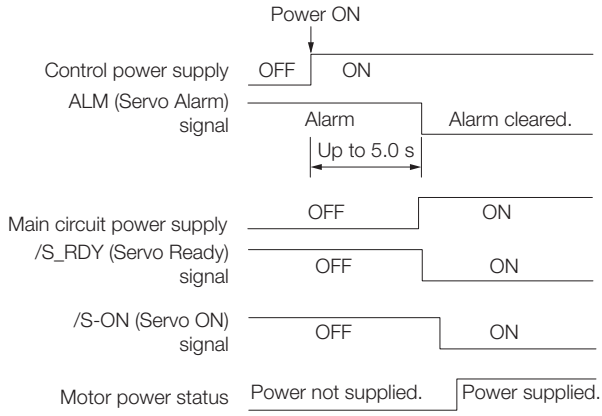

Information If the servo ON state cannot be achieved by turning ON the /S_ON signal, the /S_RDY signal is not ON. Check the status of the /S_RDY signal. Refer to the following section for details.
☞ *6.1.7 /S-RDY (Servo Ready) Signal* on page 6-12

- If you use a DC power supply input with any of the following SERVOPACKs, use the power ON sequence shown below: SGD7S-330A, -470A, -550A, -590A, or -780A.

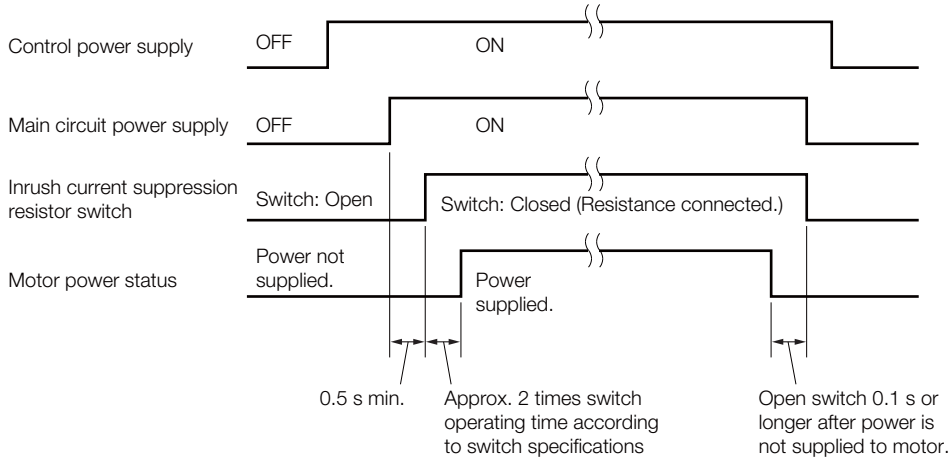

- Design the power ON sequence so that main circuit power supply is turned OFF when an ALM (Servo Alarm) signal is output.
- Make sure that the power supply specifications of all parts are suitable for the input power supply.
- Allow at least 1 s after the power supply is turned OFF before you turn it ON again.

Important
Turn ON the control power supply before the main circuit power supply or turn ON the control power supply and the main circuit power supply at the same time.
Turn OFF the main circuit power supply first, and then turn OFF the control power supply.

⚠ WARNING

- Even after you turn OFF the power supply, a high residual voltage may still remain in the SERVOPACK. To prevent electric shock, do not touch the power supply terminals after you turn OFF the power. When the voltage is discharged, the CHARGE indicator will turn OFF. Make sure the CHARGE indicator is OFF before you start wiring or inspection work.

4.3.4 Power Supply Wiring Diagrams

Using Only One SERVOPACK

- Wiring Example for Three-Phase, 200-VAC Power Supply Input: SGD7S-R70A, -R90A, -1R6A, -2R8A, -3R8A, -5R5A, -7R6A, -120A, -180A,-200A, and -330A

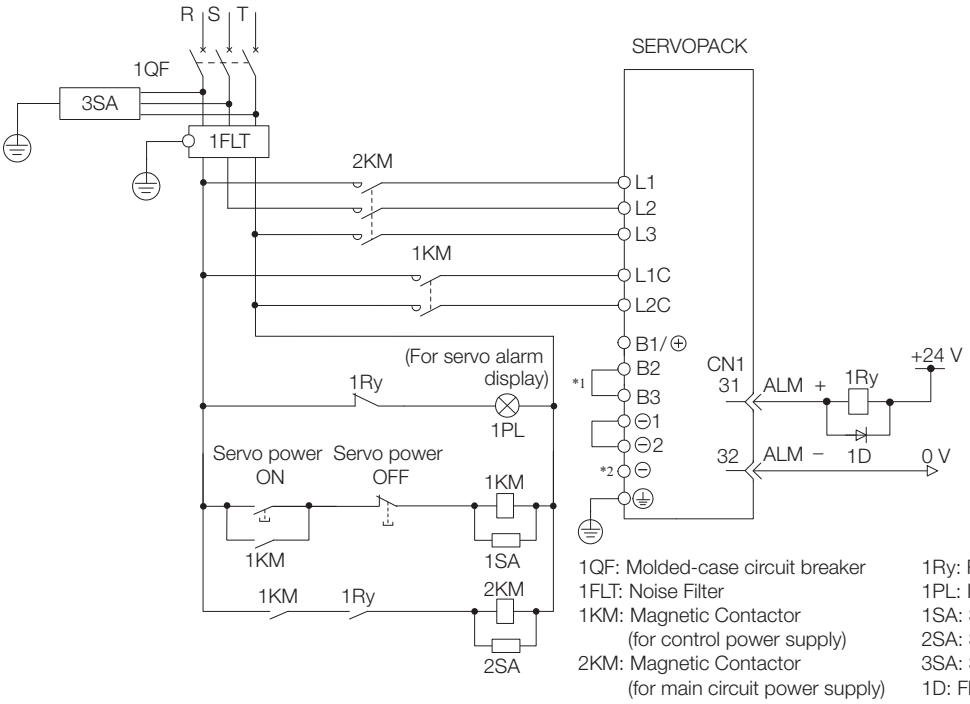

*1. You do not have to connect B2 and B3 for the following models: SGD7S-R70A, SGD7S-R90A, SGD7S-1R6A, and SGD7S-2R8A. Do not connect them.

*2. A SGD7S-330A SERVOPACK does not have a - terminal.

- Wiring Example for Three-Phase, 200-VAC Power Supply Input: SGD7S-470A, -550A, -590A, and -780A

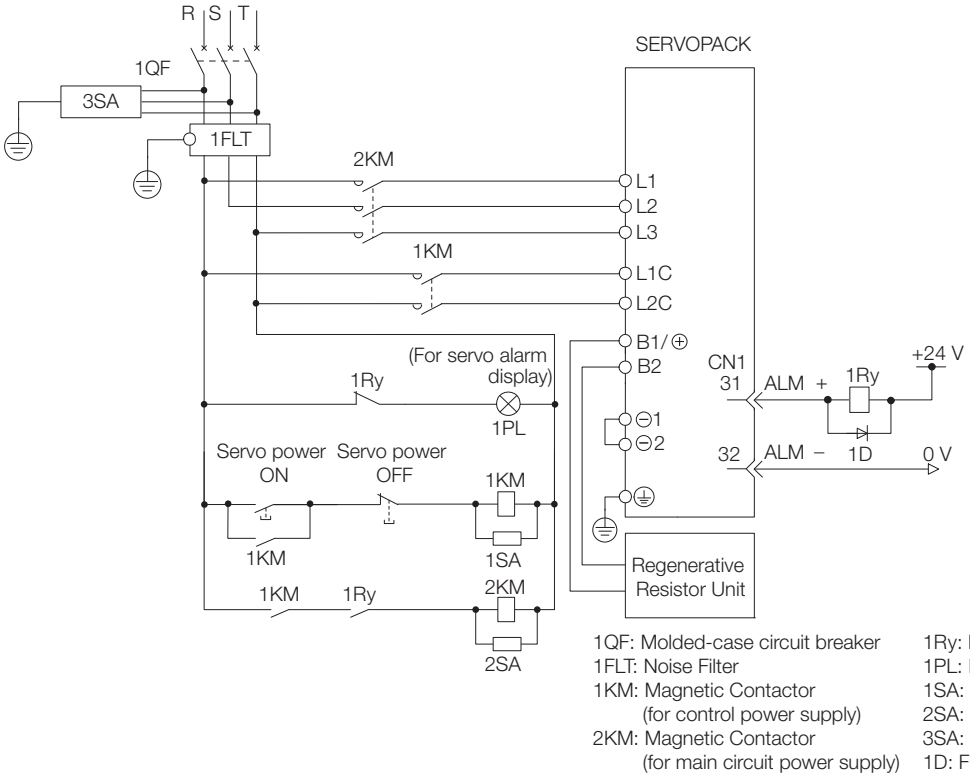

- Wiring Example for Single-Phase, 200-VAC Power Supply Input

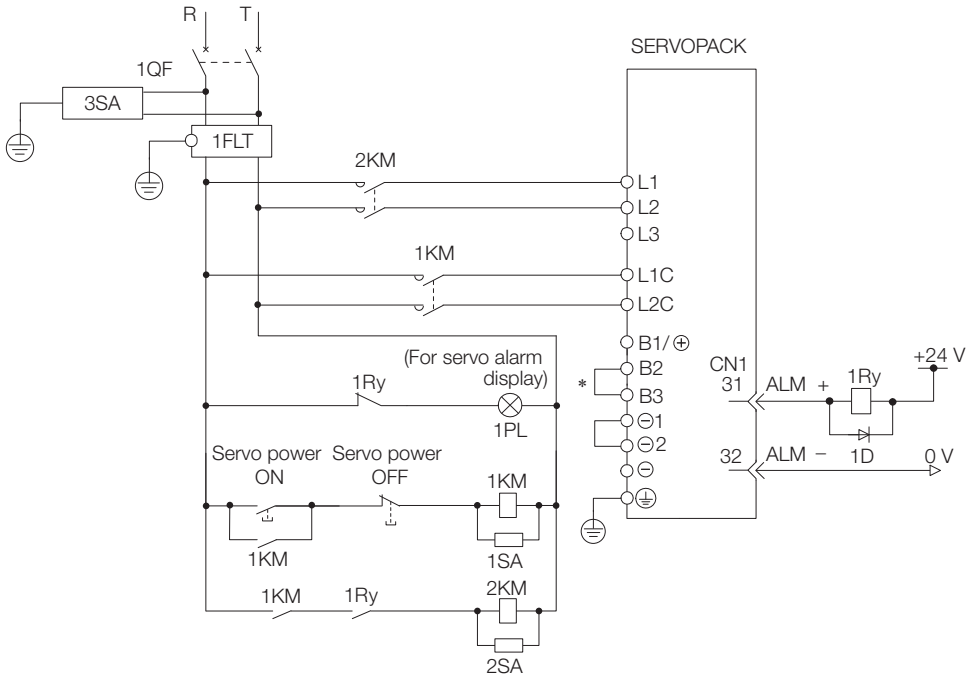

1QF: Molded-case circuit breaker
1FLT: Noise Filter
1KM: Magnetic Contactor (for control power supply)
2KM: Magnetic Contactor (for main circuit power supply)
1Ry: Relay
1PL: Indicator lamp
1SA: Surge Absorber
2SA: Surge Absorber
3SA: Surge Absorber
1D: Flywheel diode

* You do not have to connect B2 and B3 for the following models: SGD7S-R70A, SGD7S-R90A, SGD7S-1R6A, and SGD7S-2R8A. Do not connect them.

- Wiring Example for DC Power Supply Input: SGD7S-R70A, -R90A, -1R6A, -2R8A, -3R8A, -5R5A, -7R6A, -120A, -180A, and -200A

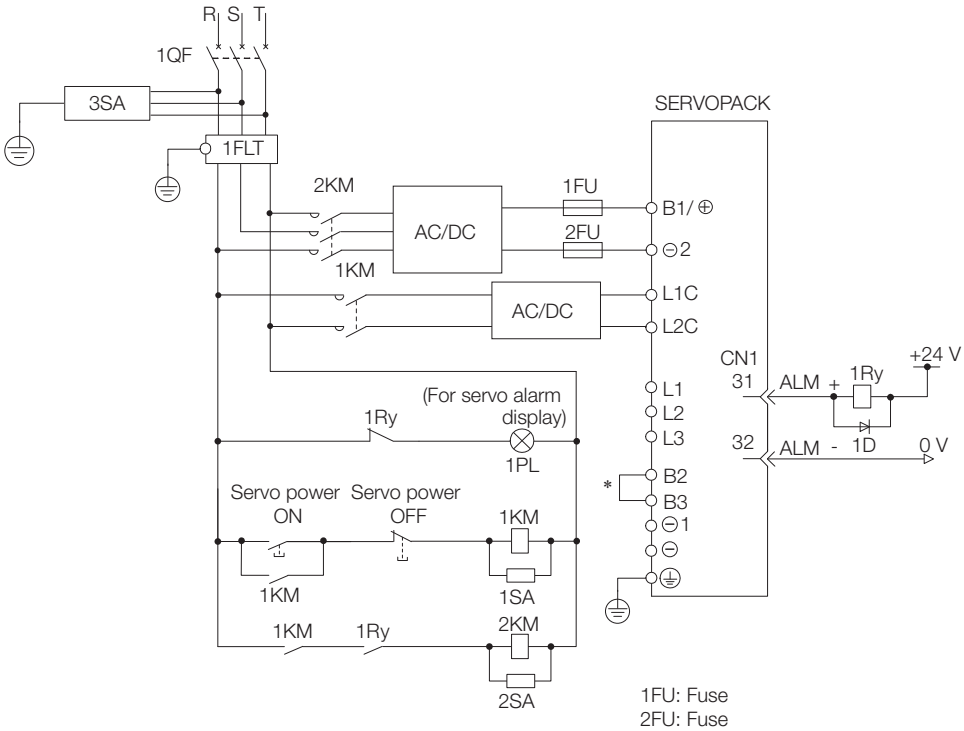

1QF: Molded-case circuit breaker
1FLT: Noise Filter
1KM: Magnetic Contactor (for control power supply)
2KM: Magnetic Contactor (for main circuit power supply)

1FU: Fuse
2FU: Fuse
1Ry: Relay
1PL: Indicator lamp
1SA: Surge Absorber
2SA: Surge Absorber
3SA: Surge Absorber
1D: Flywheel diode

* You do not have to connect B2 and B3 for the following models: SGD7S-R70A, SGD7S-R90A, SGD7S-1R6A, and SGD7S-2R8A. Do not connect them.

- Wiring Example for DC Power Supply Input: SGD7S-330A, -470A, -550A, -590A, and -780A

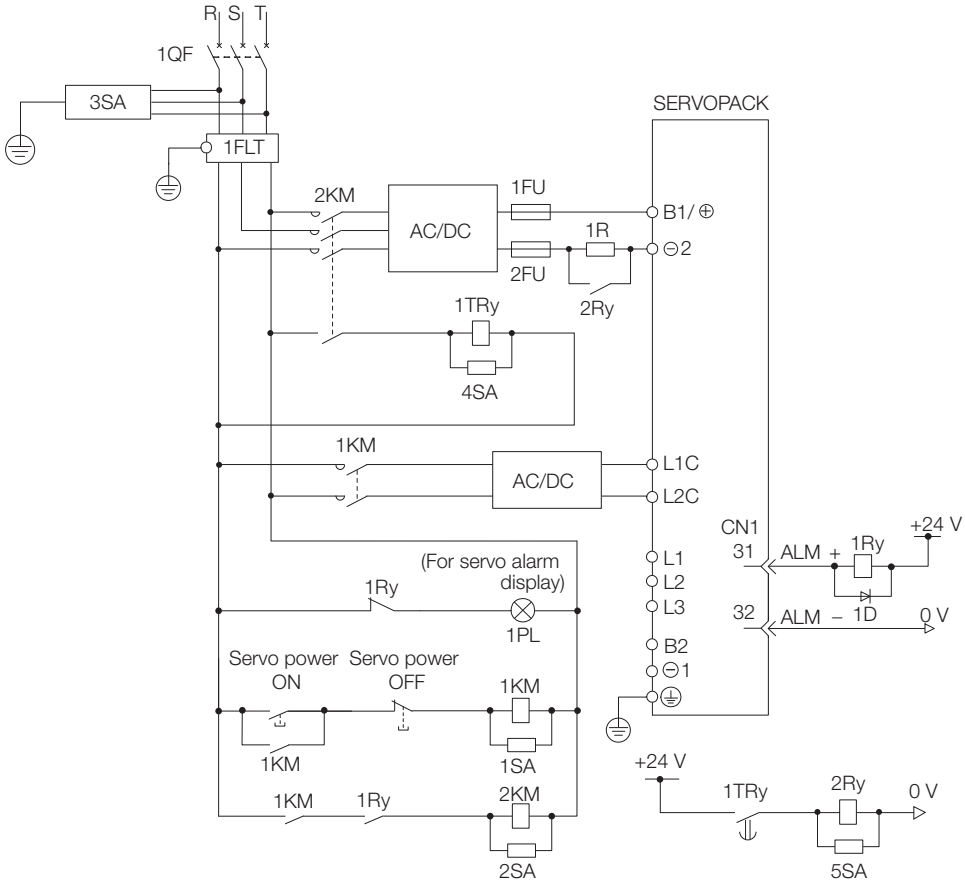

1QF: Molded-case circuit breaker
1FLT: Noise Filter
1KM: Magnetic Contactor (for control power supply)
2KM: Magnetic Contactor (for main circuit power supply, auxiliary contact)
1FU: Fuse, positive side
2FU: Fuse, negative side
1Ry: Relay
2Ry: Relay (for inrush current suppression resistor switch)
1TRy: Timer relay
1PL: Indicator lamp

1SA: Surge Absorber
2SA: Surge Absorber
3SA: Surge Absorber
4SA: Surge Absorber
5SA: Surge Absorber
1D: Flywheel diode
1R: External inrush current suppression resistor

- Wiring Example for Single-Phase, 100-VAC Power Supply Input: SGD7S-R70F, -R90F, -2R1F, or -2R8F

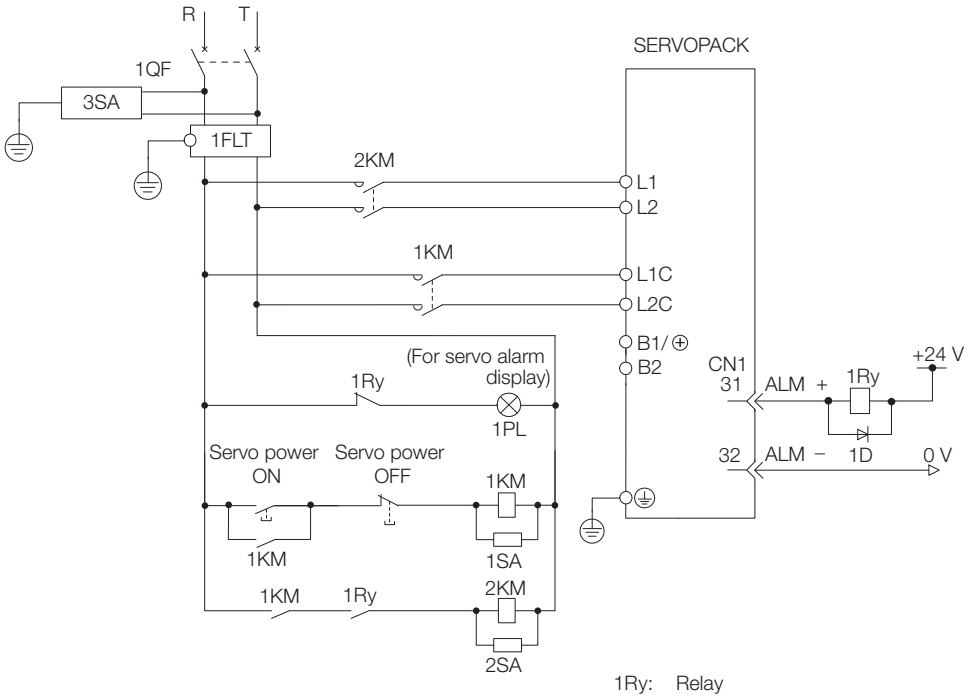

1QF: Molded-case circuit breaker
1FLT: Noise Filter
1KM: Magnetic Contactor (for control power supply)
2KM: Magnetic Contactor (for main circuit power supply)

1Ry: Relay
1PL: Indicator lamp
1SA: Surge Absorber
2SA: Surge Absorber
3SA: Surge Absorber
1D: Flywheel diode

Using More Than One SERVOPACK

Connect the ALM (Servo Alarm) output for these SERVOPACKs in series to operate the alarm detection relay (1RY).

When a SERVOPACK alarm is activated, the ALM output signal transistor turns OFF.

The following diagram shows the wiring to stop all of the Servomotors when there is an alarm for any one SERVOPACK.

More than one SERVOPACK can share a single Noise Filter. However, always select a Noise Filter that has a large enough capacity to handle the total power supply capacity of all the SERVOPACKs. Be sure to consider the load conditions.

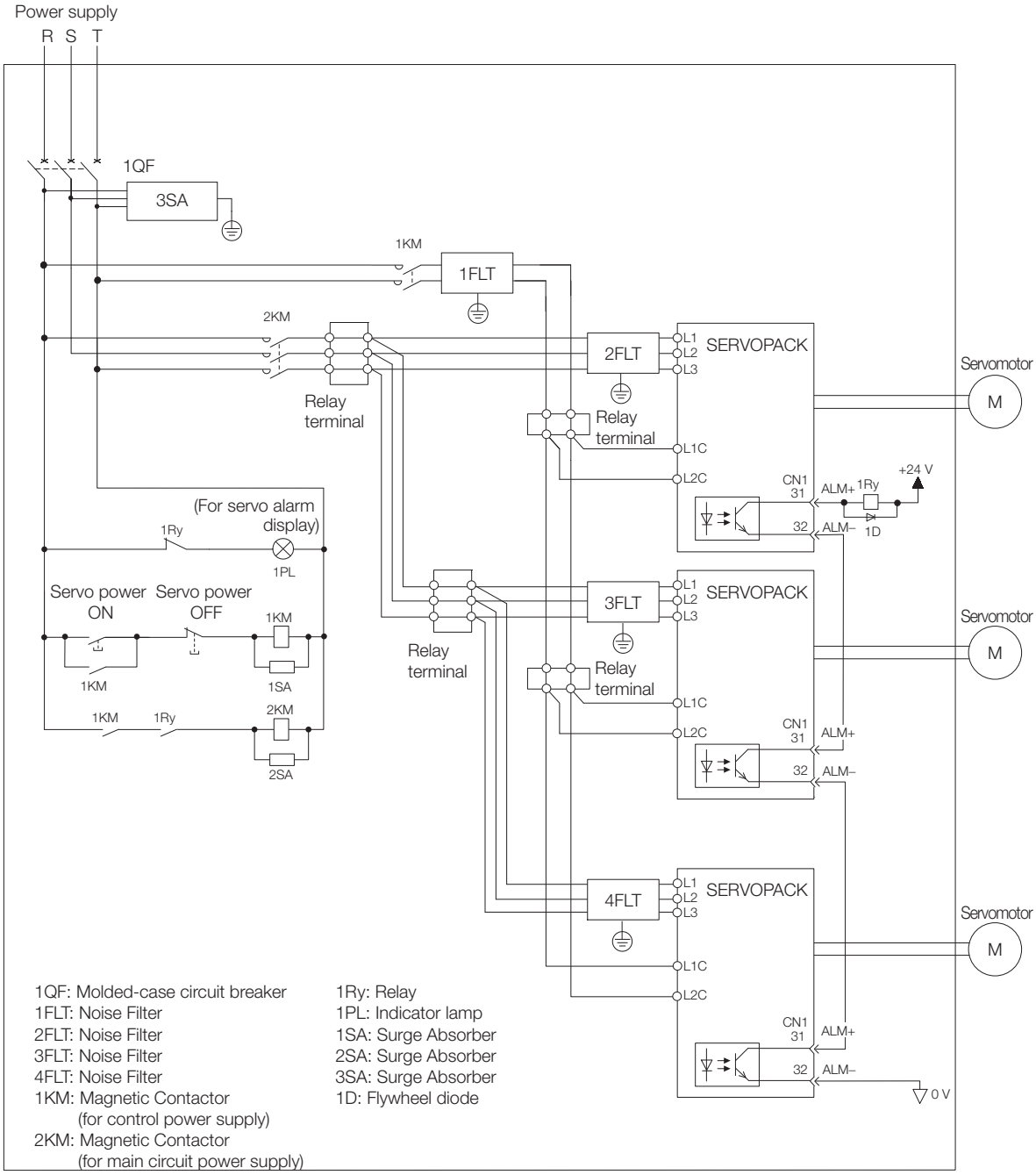

To comply with UL/cUL standards, you must install a branch circuit protective device at the power supply input section to each SERVOPACK. Refer to the following manual for details.

Σ-7-Series Σ-7S/Σ-7W/Σ-7C SERVOPACK Safety Precautions (Manual No.:TOMP C710828 00)

4.3.5 Wiring Regenerative Resistors

This section describes how to connect External Regenerative Resistors.

Refer to the following manual to select the capacity of a Regenerative Resistor.

Σ-7-Series Peripheral Device Selection Manual (Manual No.: SIEP S800001 32)

WARNING

- Be sure to wire Regenerative Resistors correctly. Do not connect B1/⊕ and B2.
  Doing so may result in fire or damage to the Regenerative Resistor or SERVOPACK.

Connecting Regenerative Resistors

◆ SERVOPACK Models SGD7S-R70A, -R90A, -1R6A, -2R8A, -R70F, -R90F, -2R1F, and -2R8F

1. Connect the External Regenerative Resistor between the B1/⊕ and B2 terminals on the SERVOPACK.

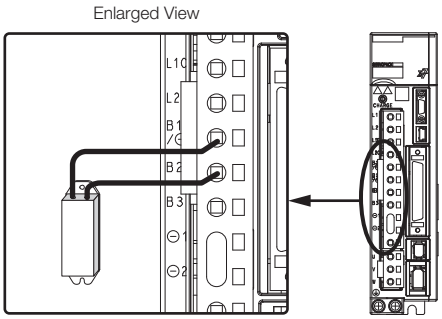

2. Set Pn600 (Regenerative Resistor Capacity) and Pn603 (Regenerative Resistance).
   Refer to the following section for details on the settings.
   5.19 Setting the Regenerative Resistor Capacity on page 5-58

◆ SERVOPACK Models SGD7S-3R8A, -5R5A, -7R6A, -120A, -180A, -200A, and -330A

1. Remove the lead from between the B2 and B3 terminals on the SERVOPACK.

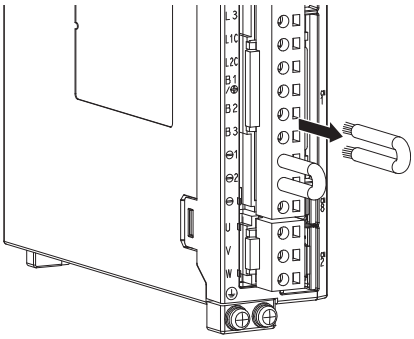

2. Connect the External Regenerative Resistor between the B1/⊕ and B2 terminals.

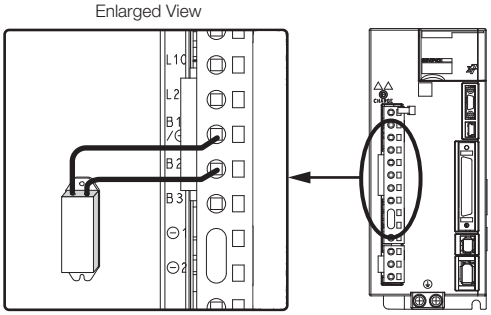

3. Set Pn600 (Regenerative Resistor Capacity) and Pn603 (Regenerative Resistance).
Refer to the following section for details on the settings.
☞ *5.19 Setting the Regenerative Resistor Capacity* on page 5-58

◆ SERVOPACK Models SGD7S-470A, -550A, -590A, and -780A

1. Connect the R1 and R2 terminals on the Regenerative Resistor Unit to the B1/⊕ and B2 terminals on the SERVOPACK.

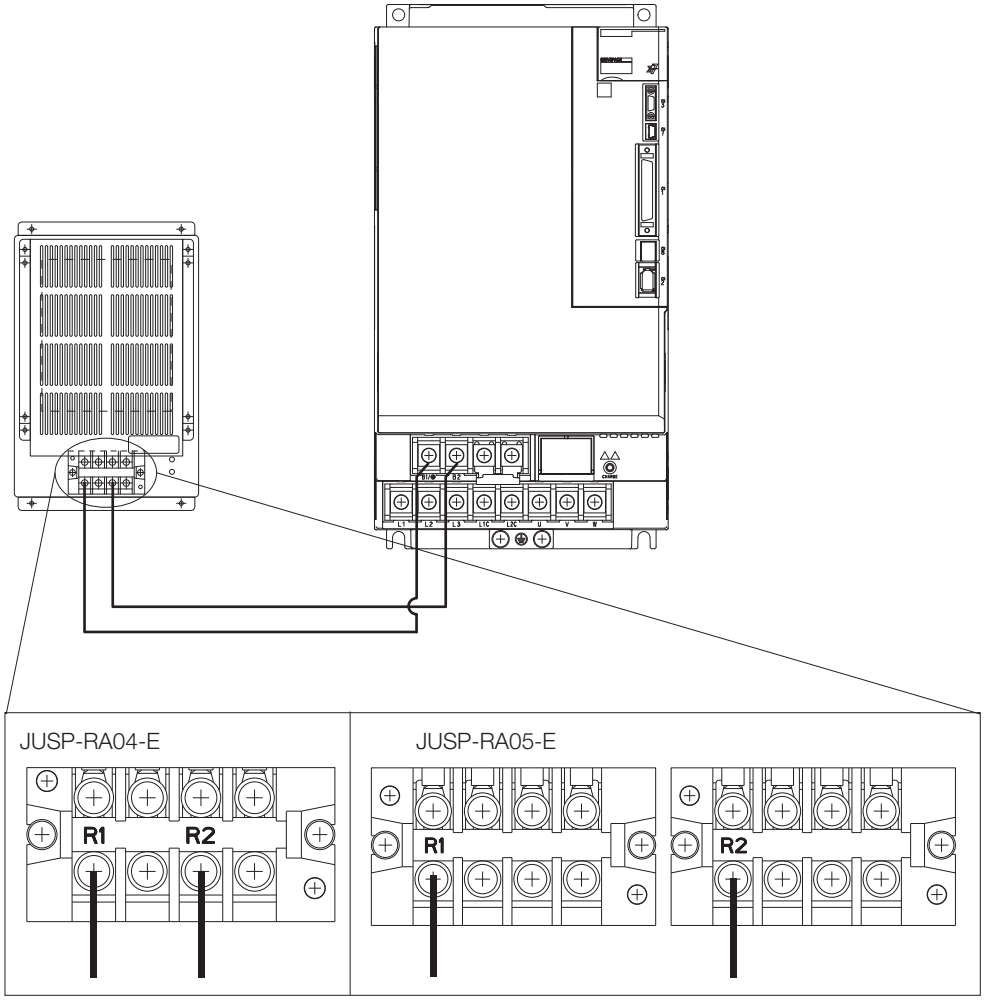

2. Set Pn600 (Regenerative Resistor Capacity) and Pn603 (Regenerative Resistance) as required.
   - When using the Yaskawa-recommended Regenerative Resistor Unit, use the default settings for Pn600 and Pn603.
   - If you use any other external regenerative resistor, set Pn600 and Pn603 according to the specifications of the regenerative resistor.

   Refer to the following section for details on the settings.
☞ *5.19 Setting the Regenerative Resistor Capacity* on page 5-58

4.3.6 Wiring Reactors for Harmonic Suppression

You can connect a reactor for harmonic suppression to the SERVOPACK when power supply harmonic suppression is required. Refer to the following manual for details on reactors for harmonic suppression.

Σ-7-Series Peripheral Device Selection Manual (Manual No.: SIEP S800001 32)

Refer to the following figures to connect reactors.

SERVOPACK with Three-Phase, 200-VAC Power Supply Input	SERVOPACK with Single-Phase, 100-VAC Power Supply Input
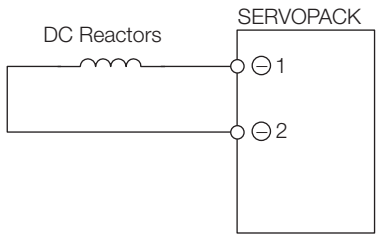	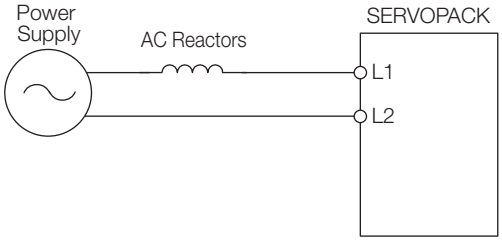

Note: 1. Connection terminals ⊖ 1 and ⊖ 2 for a DC Reactor are connected when the SERVOPACK is shipped. Remove the lead wire and connect a DC Reactor.
2. Reactors are optional products. (Purchase them separately.)
3. You cannot connect a DC Reactor to a SERVOPACK with a single-phase, 100-VAC power supply input.

4.4 Wiring Servomotors

4.4.1 Terminal Symbols and Terminal Names

The SERVOPACK terminals or connectors that are required to connect the SERVOPACK to a Servomotor are given below.

Terminal/Connector Symbols	Terminal/Connector Name	Remarks
U, V, and W	Servomotor terminals	Refer to the following section for the wiring procedure. ☞ *4.3.2 Wiring Procedure for Main Circuit Connector* on page 4-14
⏚	Ground terminal	–
CN2	Encoder connector	–

4.4.2 Pin Arrangement of Encoder Connector (CN2)

- When Using a Rotary Servomotor

Pin No.	Signal	Function
1	PG5V	Encoder power supply +5 V
2	PG0V	Encoder power supply 0 V
3	BAT (+)*	Battery for absolute encoder (+)
4	BAT (-)*	Battery for absolute encoder (-)
5	PS	Serial data (+)
6	/PS	Serial data (-)
Shell	Shield	–

* No wiring is required for an incremental encoder or a batteryless absolute encoder.

- When Using a Direct Drive Servomotor

Pin No.	Signal	Function
1	PG5V	Encoder power supply +5 V
2	PG0V	Encoder power supply 0 V
3	–	– (Do not use.)
4	–	– (Do not use.)
5	PS	Serial data (+)
6	/PS	Serial data (-)
Shell	Shield	–

- When Using a Linear Servomotor

Pin No.	Signal	Function
1	PG5V	Linear encoder power supply +5 V
2	PG0V	Linear encoder power supply 0 V
3	–	– (Do not use.)
4	–	– (Do not use.)
5	PS	Serial data (+)
6	/PS	Serial data (-)
Shell	Shield	–

4.4.3 Wiring the SERVOPACK to the Encoder

When Using an Absolute Encoder

If you use an absolute encoder, use an Encoder Cable with a JUSP-BA01-E Battery Case or install a battery on the host controller.

Refer to the following section for the battery replacement procedure.

☞ *12.1.3 Replacing the Battery* on page 12-3

- Wiring Example When Using an Encoder Cable with a Battery Case

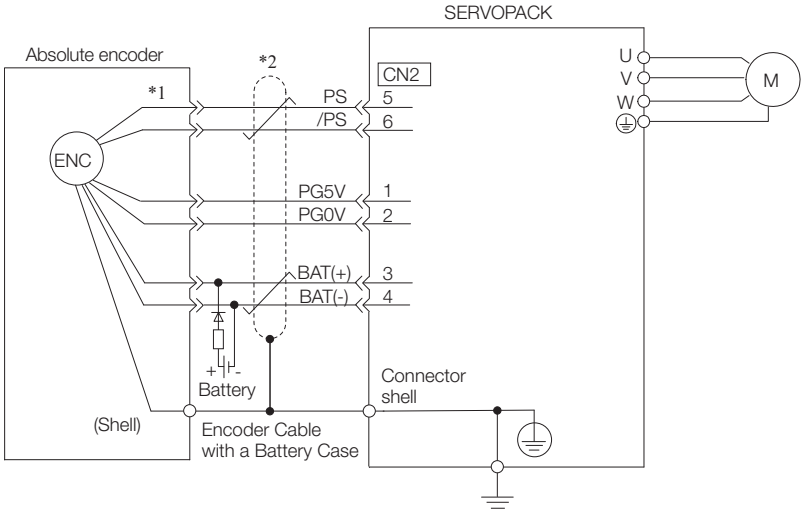

*1. The absolute encoder pin numbers for wiring the connector depend on the Servomotor that you use.

*2. 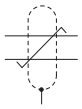 represents a shielded twisted-pair cable.

- Wiring Example When Installing a Battery on the Host Controller

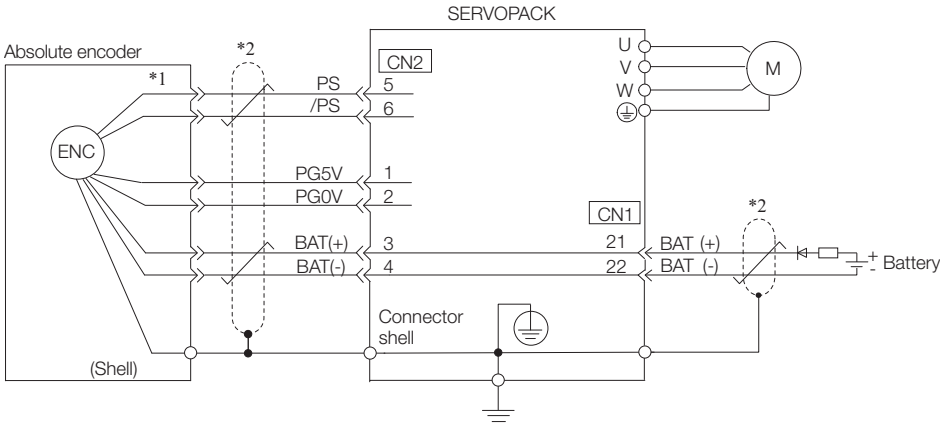

*1. The absolute encoder pin numbers for wiring the connector depend on the Servomotor that you use.

*2. 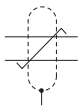 represents a shielded twisted-pair cable.

Important

- When Installing a Battery on the Encoder Cable
  Use the Encoder Cable with a Battery Case that is specified by Yaskawa.
  Refer to the following manual for details.
  Σ-7-Series Peripheral Device Selection Manual (Manual No.: SIEP S800001 32)
- When Installing a Battery on the Host Controller
  Insert a diode near the battery to prevent reverse current flow.

Circuit Example	Required Component Specifications	
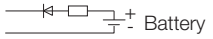	• Schottky Diode Reverse Voltage: Vr ≥ 40 V Forward Voltage: Vf ≤ 0.37 V Reverse current: Ir ≤ 5 μA Junction temperature: Tj ≥ 125℃	• Resistor Resistance: 22 Ω Tolerance: ±5% max. Rated power: 0.25 W min.

When Using an Incremental Encoder or Batteryless Absolute Encoder

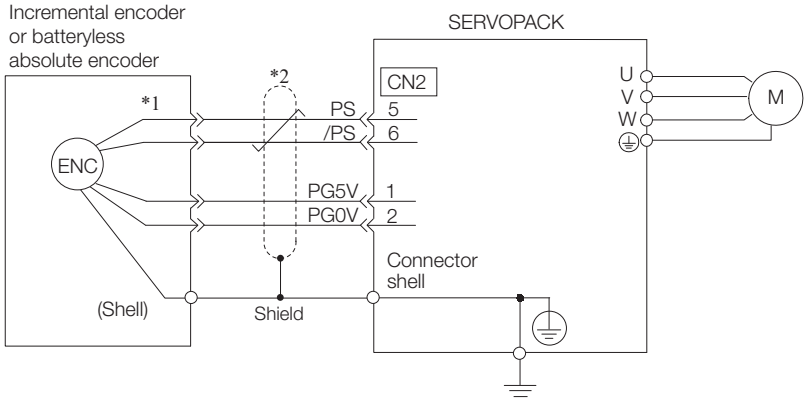

*1. The encoder pin numbers for wiring the connector depend on the Servomotor that you use.

*2. 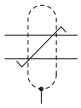 represents a shielded twisted-pair cable.

When Using an Absolute Linear Encoder

The wiring depends on the manufacturer of the linear encoder.

◆ Connections to Linear Encoder from Dr. JOHANNES HEIDENHAIN GmbH

■ LIC4100 Series, LIC2100 Series, LC115, and LC415

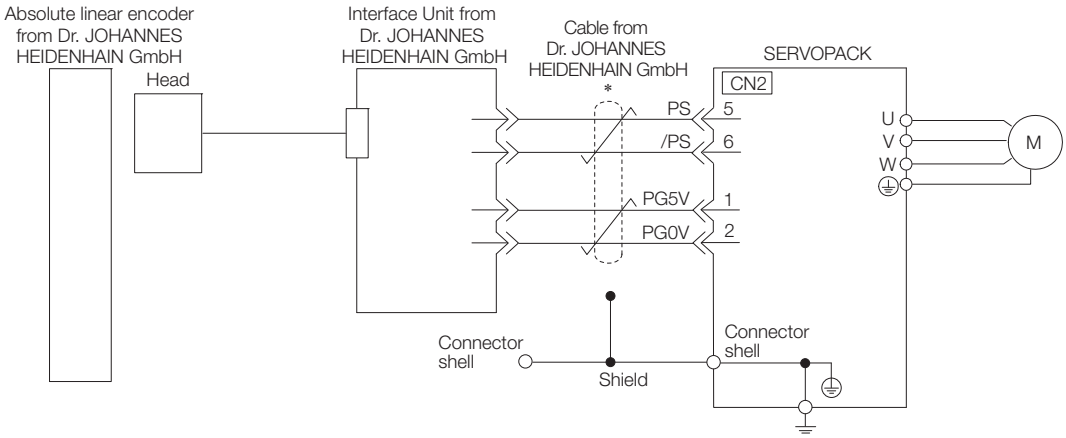

* represents a shielded twisted-pair cable.

Information Sales of the interface unit EIB3391Y with the LIC4100 and LIC2100 series have ended due to the release of the LIC4190, LIC3190, and LIC2190 series.

■ LIC4190, LIC3190, and LIC2190 Series

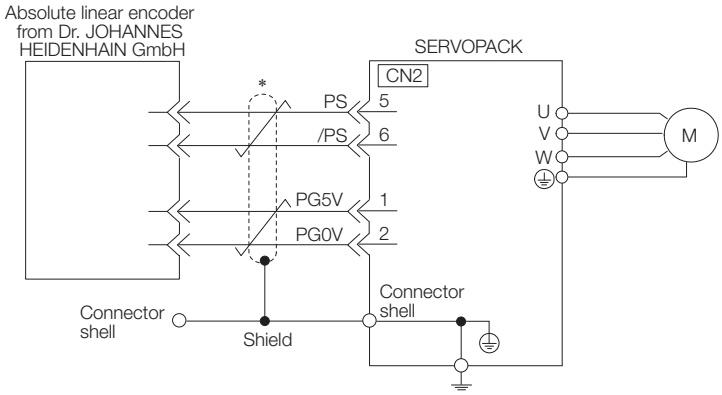

* represents a shielded twisted-pair cable.

◆ Connections to Linear Encoder from RSF Elektronik GmbH

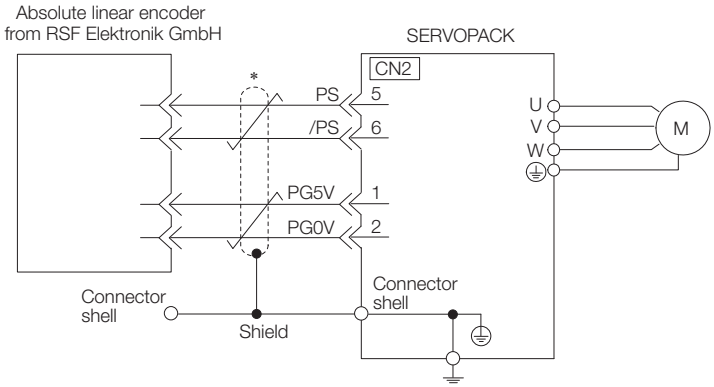

* represents a shielded twisted-pair cable.

◆ Connections to Linear Encoder from Mitutoyo Corporation

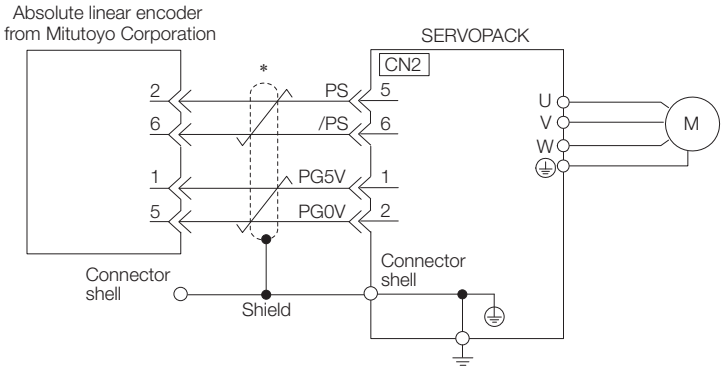

* represents a shielded twisted-pair cable.

◆ Connections to Absolute Linear Encoder from Renishaw PLC

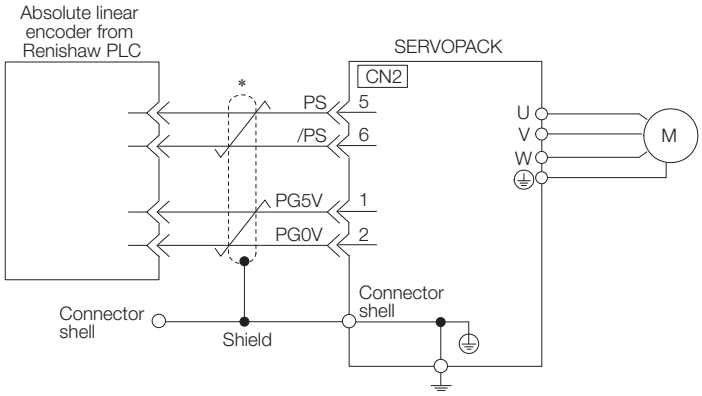

* represents a shielded twisted-pair cable.

◆ Connections to Linear Encoder from RLS d.o.o.

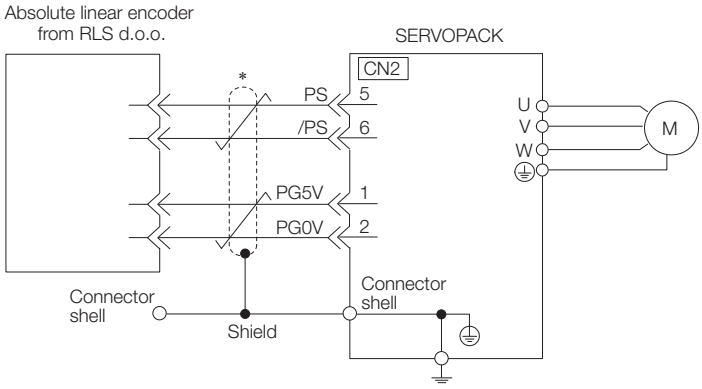

* represents a shielded twisted-pair cable.

◆ Connections to Absolute Linear Encoder from Magnescale Co., Ltd.

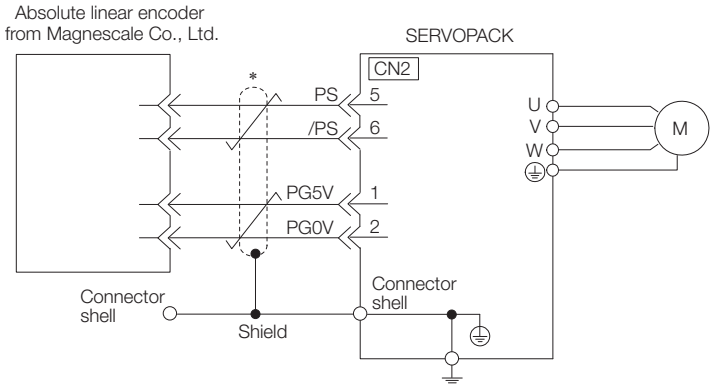

* represents a shielded twisted-pair cable.

◆ Connections to Absolute Linear Encoder from Fagor Automation S. Coop.

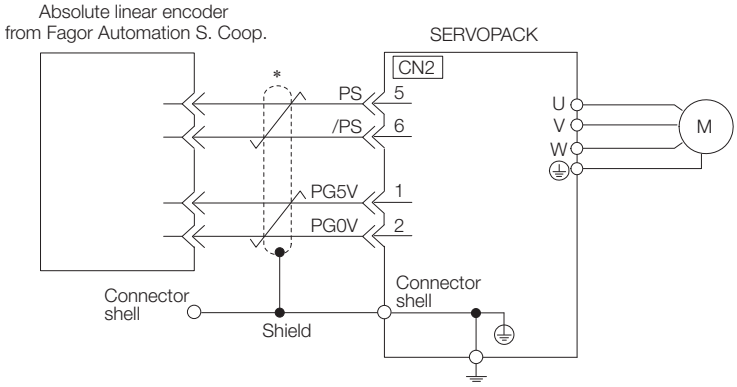

* represents a shielded twisted-pair cable.

◆ Connections to Absolute Linear Encoder from Canon Precision Inc.

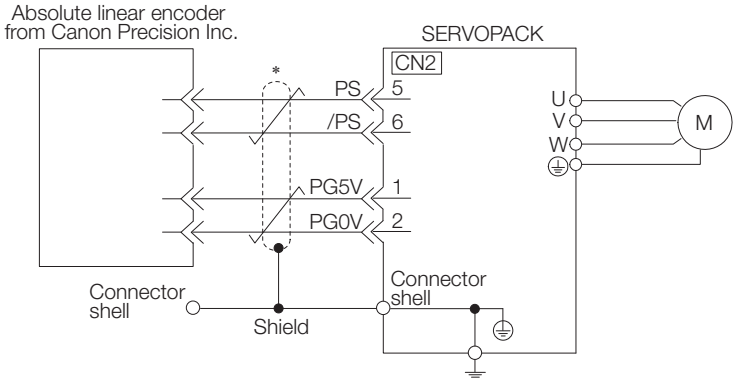

* represents a shielded twisted-pair cable.

When Using an Incremental Linear Encoder

The wiring depends on the manufacturer of the linear encoder.

◆ Connections to Linear Encoder from Dr. JOHANNES HEIDENHAIN GmbH

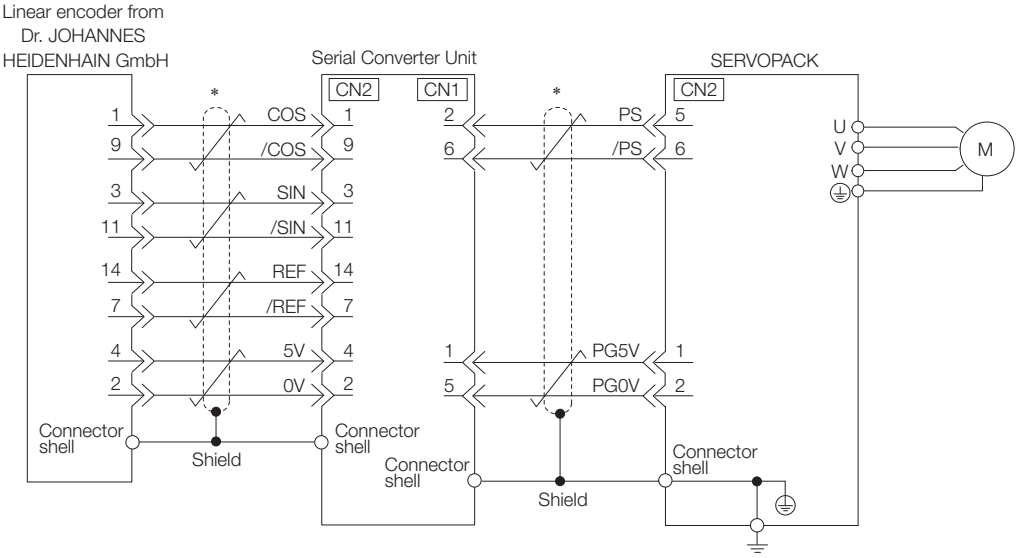

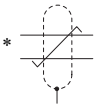
represents a shielded twisted-pair cable.

◆ Connections to Linear Encoder from Renishaw PLC

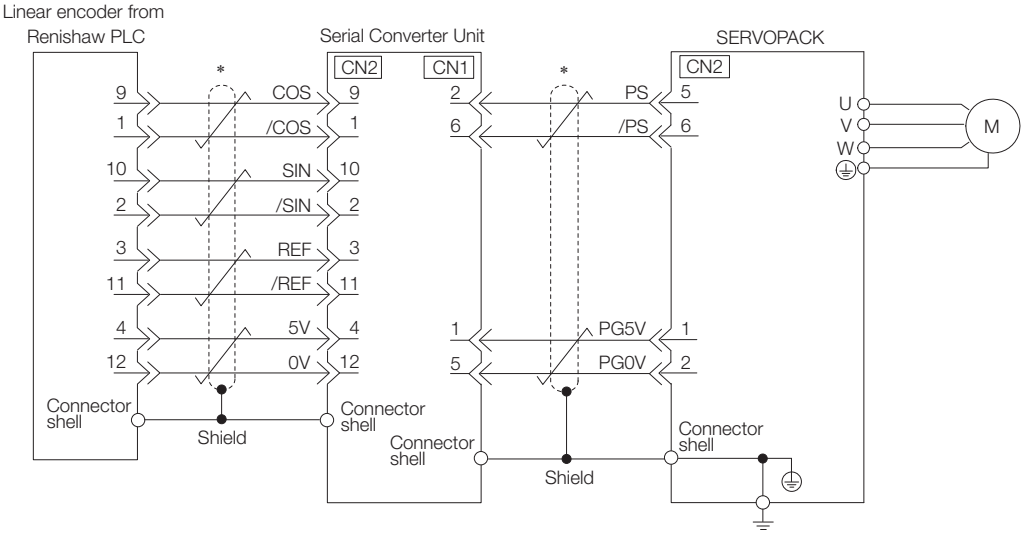

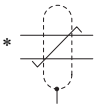
represents a shielded twisted-pair cable.

◆ Connections to Linear Encoder from Magnescale Co., Ltd.

If you use a linear encoder from Magnescale Co., Ltd., the wiring will depend on the model of the linear encoder.

■ SR75 and SR85

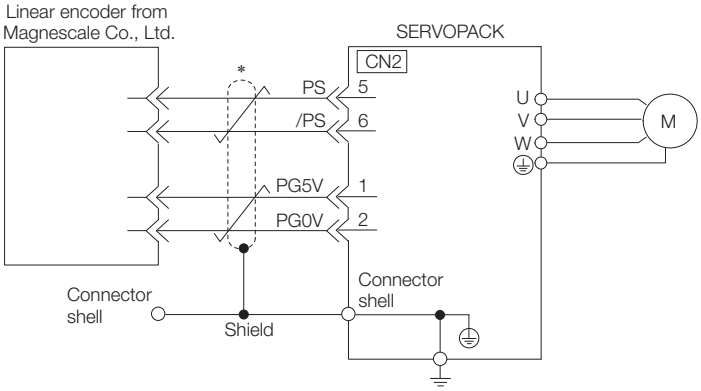

* represents a shielded twisted-pair cable.

■ SL700, SL710, SL720, SL730, and SQ10

- PL101-RY, MQ10-FLA, or MQ10-GLA Interpolator
  The following table gives the Linear Encoder and Interpolator combinations.

Linear Encoder Model	Interpolator Model
SL700, SL710, SL720, and SL730	PL101-RY*1
SQ10	MQ10-FLA*2
	MQ10-GLA*2

*1. This is the model of the Head with Interpolator.
*2. This is the model of the Interpolator.

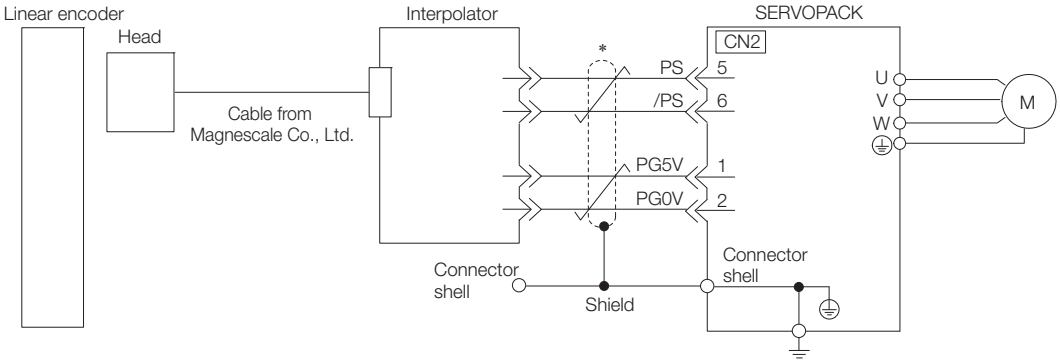

* represents a shielded twisted-pair cable.

■ SL700, SL710, SL720, and SL730

• MJ620-T13 Interpolator

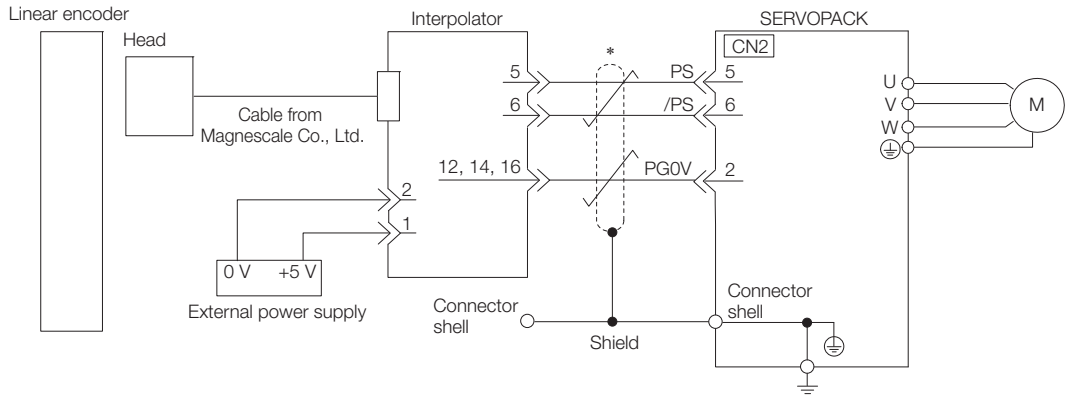

* represents a shielded twisted-pair cable.

◆ Connections to Linear Encoder from Canon Precision Inc.

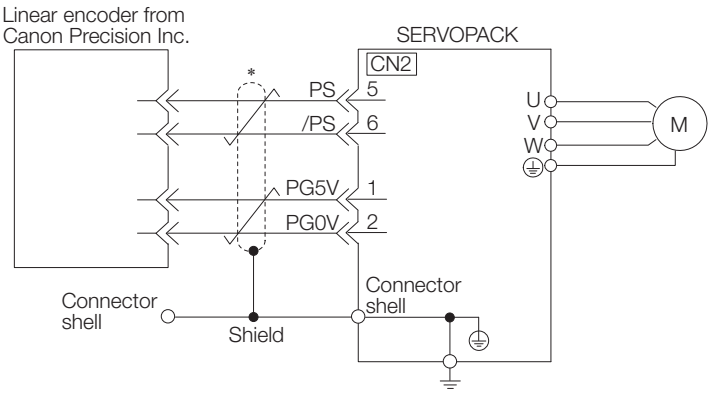

* represents a shielded twisted-pair cable.

4.4.4 Wiring the SERVOPACK to the Holding Brake

Important

- If you use a Rotary Servomotor, select a Surge Absorber according to the brake current and brake power supply. Refer to the following manual for details.
  Σ-7-Series Peripheral Device Selection Manual (Manual No.: SIEP S800001 32)
- After the Surge Absorber is connected, check the brake operation delay time in your application. The Surge Absorber may affect the brake operation delay time.
  Configure the relay circuit to activate the holding brake for an emergency stop.

Relay Circuit Example

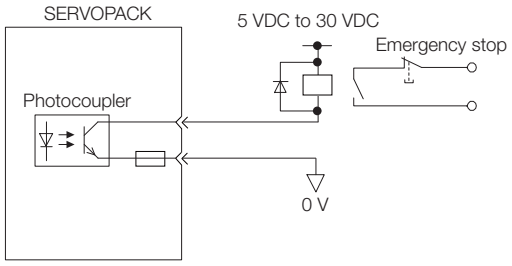

- The /BK (Brake) signal cannot be used with the default settings. You must allocate the output signal. Refer to the following section for details.
  Allocating the /BK (Brake) Signal on page 5-38
- If you use a 24-V brake, install a separate power supply for the 24-VDC power supply from other power supplies, such as the one for the I/O signals of the CN1 connector. If the power supply is shared, the I/O signals may malfunction.

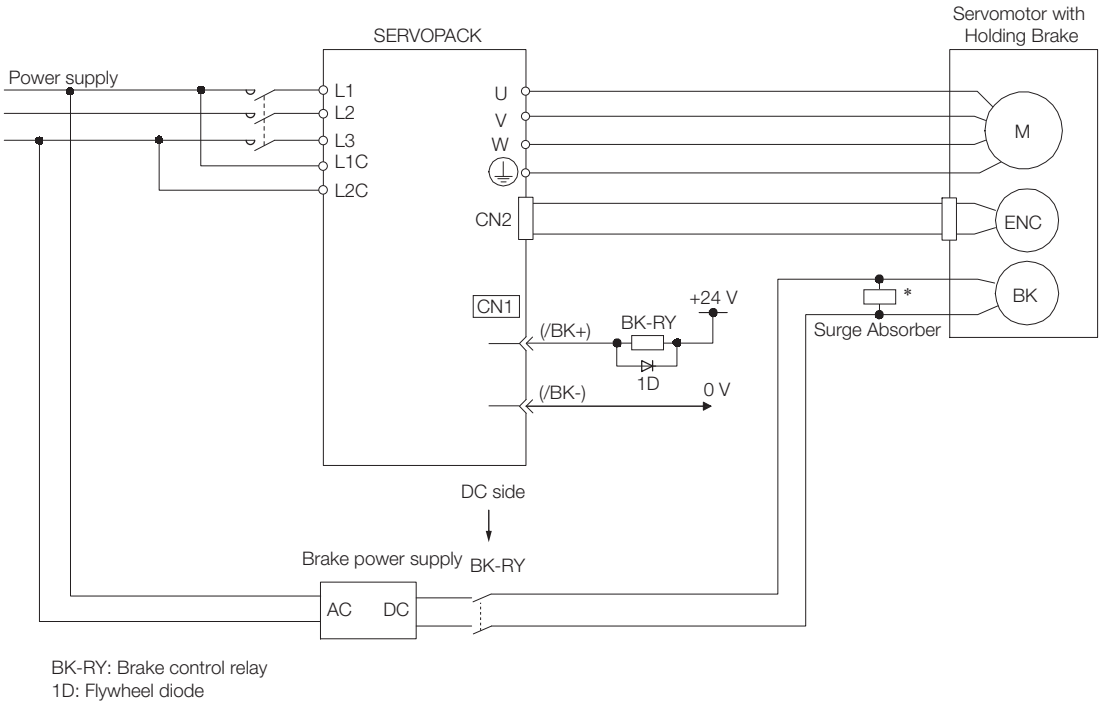

* Install the surge absorber near the brake terminals on the Servomotor.

4.5 I/O Signal Connections

4.5.1 I/O Signal Connector (CN1) Names and Functions

The following table gives the pin numbers, names, and functions the I/O signal pins for the default settings.

Input Signals

Default settings are given in parentheses.

Control Method	Signal	Pin No.	Name	Function	Reference Page
Any Control Method	/SI0* (/S-ON)	40	General-purpose Sequence Input 0 (Servo ON Input)	You can allocate the input signal to use with a parameter. (Controls turning the Servomotor ON and OFF (supplying/not supplying power).)	page 5-17
	/SI3* (/P-CON)	41	General-purpose Sequence Input 3 (Proportional Control Input)	You can allocate the input signal to use with a parameter. (Changes the speed control loop from PI (proportional/integral) to P (proportional) control when turned ON.)	page 8-75
	/SI1* (P-OT)	42	General-purpose Sequence Input 1 (Forward Drive Prohibit Input)	You can allocate the input signals to use with parameters. (Stops Servomotor drive (to prevent over-travel) when the moving part of the machine exceeds the range of movement.)	page 5-31
	/SI2* (N-OT)	43	General-purpose Sequence Input 2 (Reverse Drive Prohibit Input)		
	/SI5* (/P-CL)	45	General-purpose Sequence Input 5 (Forward External Torque Limit Input)	You can allocate the input signals to use with parameters. (Activates/deactivates external torque limiting.)	page 6-65
	/SI6* (/N-CL)	46	General-purpose Sequence Input 6 (Reverse External Torque Limit Input)		
	/SI4* (/ALM-RST)	44	General-purpose Sequence Input 4 (Alarm Reset Input)	You can allocate the input signal to use with a parameter. (Clears alarms.)	page 12-41
	+24VIN	47	Sequence Input Signal Power Supply Input	Inputs the sequence input signal power supply. Allowable voltage range: 24 VDC ±20% The 24-VDC power supply is not provided by Yaskawa.	–
	SEN	4 (2)	Absolute Data Request Input (SEN)	Inputs the position data request signal for an absolute encoder.	page 6-74 page 6-88
	BAT+	21	Battery for absolute encoder (+)	These are the pins to connect the absolute encoder backup battery. Do not connect these pins if you use the Encoder Cable with a Battery Case.	–
	BAT-	22	Battery for absolute encoder (-)		
	TH	50	Overheat Protection Input	Inputs the overheat protection signal from a Linear Servomotor or from a sensor attached to the machine.	page 6-110
Speed Control	V-REF	5 (6)	Speed Reference	Inputs the speed reference. Maximum input voltage: ±12 V	page 6-13

Continued on next page.

Continued from previous page.

Control Method	Signal	Pin No.	Name	Function	Reference Page
Position Control	PULS /PULS	7 8	Pulse Reference Input	One of the following input pulse forms is set. • Sign + pulse train • CW + CCW pulse trains • 90° phase-differential pulses	page 6-31
	SIGN /SIGN	11 12	Sign of Reference Input		
	CLR /CLR	15 14	Position Deviation Clear Input	Clears the position deviation during position control.	page 6-33
Torque Control	T-REF	9 (10)	Torque Reference Input	Inputs the torque reference. Maximum input voltage: ±12 V	page 6-40

* You can change the allocations. Refer to the following section for details.
☞ *6.1.1 Input Signal Allocations* on page 6-5

Note: 1. Pin numbers in parentheses ( ) indicate signal grounds.
2. If forward drive prohibition or reverse drive prohibition is used, the SERVOPACK is stopped by software controls. If the application does not satisfy the safety requirements, add external safety circuits as required.

Output Signals

Default settings are given in parentheses.

Control Method	Signal	Pin No.	Name	Function	Reference Page
Any Control Method	ALM+	31	Servo Alarm Output	Turns OFF (opens) when an error is detected.	page 6-9
	ALM-	32			
	/SO2+* (/TGON+)	27	General-purpose Sequence Output 2 (Rotation Detection Output)	You can allocate the output signal to use with a parameter. (Turns ON (closes) when the Servomotor speed exceeds a set value.)	page 6-11
	/SO2-* (/TGON-)	28			
	/SO3+* (/S-RDY+)	29	General-purpose Sequence Output 3 (Servo Ready Output)	You can allocate the output signal to use with a parameter. (Turns ON (closes) when the SERVOPACK is ready to acknowledge the /S-ON (Servo ON) signal.)	page 6-12
	/SO3-* (/S-RDY-)	30			
	PAO	33	Encoder Divided Pulse Output, Phase A	Output the encoder divided pulse output signals with a 90° phase differential.	page 6-74 page 6-88
	/PAO	34			
	PBO	35	Encoder Divided Pulse Output, Phase B		
	/PBO	36			
	PCO	19	Encoder Divided Pulse Output, Phase C	Outputs the origin signal once every encoder rotation.	
	/PCO	20			
	PSO	48	Absolute Encoder Position Output	Outputs the position data of the absolute encoder.	
	/PSO	49			
	ALO1*	37 (1)	Alarm Code Output	Output a 3-bit alarm code.	page 6-10
	ALO2*	38 (1)			
	ALO3*	39 (1)			
	FG	Shell	Frame ground	Connected to the frame ground if the shield of the I/O Signal Cable is connected to the connector shell.	–
Speed Control	/SO1+* (/V-CMP+)	25	General-purpose Sequence Output 1 (Speed Coincidence Detection Output)	You can allocate the output signal to use with a parameter. (Turns ON (closes) if the motor speed is within the set range and matches the reference speed value when speed control is selected.)	page 6-27
	/SO1-* (/V-CMP-)	26			
Position Control	/SO1+* (/COIN+)	25	General-purpose Sequence Output 1 (Positioning Completion Output)	You can allocate the output signals to use with parameters. (Turns ON (closes) if the position deviation reaches the set value when position control is selected.)	page 6-37
	/SO1-* (/COIN-)	26			
	PL1	3	Open-Collector Power Supply Output for Reference Pulses	Outputs the open-collector power supply for reference pulses.	–
	PL2	13			
	PL3	18			
–	–	16 17 23 24	–	Do not use these terminals.	–

* You can change the allocations. Refer to the following section for details.

☞ *6.1.2 Output Signal Allocations* on page 6-8

Note: Pin numbers in parentheses ( ) indicate signal grounds.

4.5.2 I/O Signal Connector (CN1) Pin Arrangement

The following figure gives the pin arrangement of the of the I/O signal connector (CN1) for the default settings.

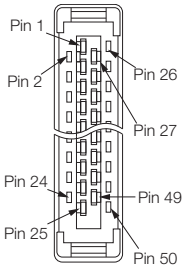

The above view is from the direction of the following arrow without the connector shell attached.

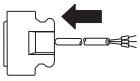

2	SG	Signal Ground	1	SG	Signal Ground	27	/SO2+ (/TGON+)	General-purpose Sequence Output 2	26	/SO1- (/V-CMP-)	General-purpose Sequence Output 1
4	SEN	Absolute Data Request Input (SEN)	3	PL1	Open-Collector Power Supply Output for Reference Pulses	29	/SO3+ (/S-RDY+)	General-purpose Sequence Output 3	28	/SO2- (/TGON-)	General-purpose Sequence Output 2
6	SG	Signal Ground	5	V-REF	Speed Reference Input	31	ALM+	Servo Alarm Output	30	/SO3- (/S-RDY-)	General-purpose Sequence Output 3
8	/PULS	Pulse Reference Input	7	PULS	Pulse Reference Input	33	PAO	Encoder Divided Pulse Output, Phase A	32	ALM-	Servo Alarm Output
10	SG	Signal Ground	9	T-REF	Torque Reference Input	35	PBO	Encoder Divided Pulse Output, Phase B	34	/PAO	Encoder Divided Pulse Output, Phase A
12	/SIGN	Sign of Reference Input	11	SIGN	Sign of Reference Input	37	ALO1	Alarm Code Output	36	/PBO	Encoder Divided Pulse Output, Phase B
14	/CLR	Position Deviation Clear Input	13	PL2	Open-Collector Power Supply Output for Reference Pulses	39	ALO3	Alarm Code Output	38	ALO2	Alarm Code Output
16	–	–	15	CLR	Position Deviation Clear Input	41	/SI3 (/P-CON)	General-purpose Sequence Input 3	40	/SI0 (/S-ON)	General-purpose Sequence Input 0
18	PL3	Open-Collector Power Supply Output for Reference Pulses	17	–	–	43	/SI2 (N-OT)	General-purpose Sequence Input 2	42	/SI1 (P-OT)	General-purpose Sequence Input 1
			19	PCO	Encoder Divided Pulse Output, Phase C				44	/SI4 (/ALM-RST)	General-purpose Sequence Input 4
20	/PCO	Encoder Divided Pulse Output, Phase C	21	BAT+	Battery for Absolute Encoder (+)	45	/SI5 (/P-CL)	General-purpose Sequence Input 5	46	/SI6 (/N-CL)	General-purpose Sequence Input 6
22	BAT-	Battery for Absolute Encoder (-)	23	–	–	47	+24VIN	Sequence Input Signal Power Supply Input	48	PSO	Absolute Encoder Position Output
24	–	–	25	/SO1+ (/V-CMP+)	General-purpose Sequence Output 1	49	/PSO	Absolute Encoder Position Output	50	TH	Overheat Protection Input

4.5.3 I/O Signal Wiring Examples

Speed Control with a Rotary Servomotor

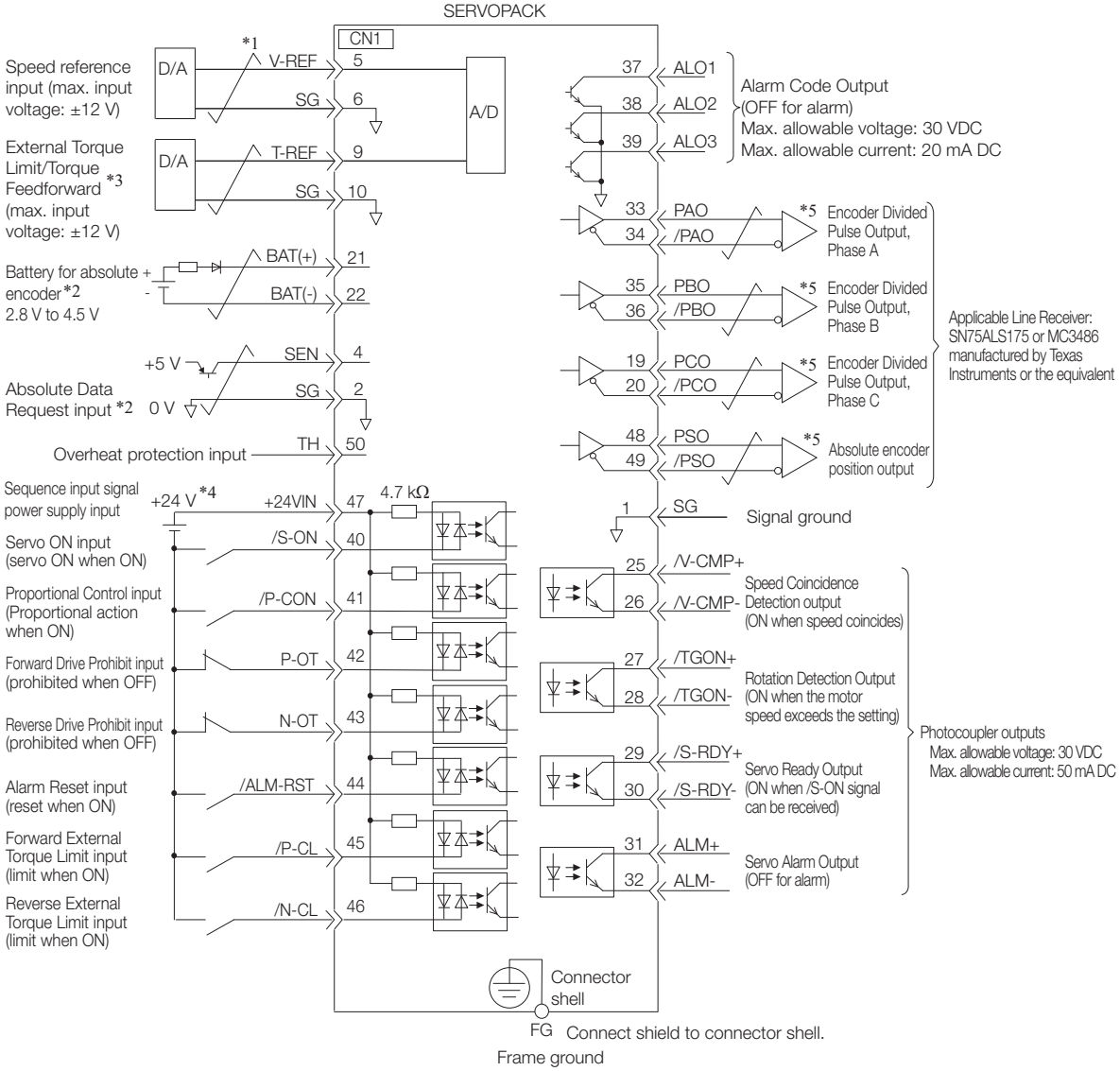

*1. represents twisted-pair wires.
*2. Connect these when using an absolute encoder. If the Encoder Cable with a Battery Case is connected, do not connect a backup battery.
*3. You can enable this function with a parameter setting.
*4. The 24-VDC power supply is not provided by Yaskawa. Use a 24-VDC power supply with double insulation or reinforced insulation.
*5. Always use line receivers to receive the output signals.

Note: If you use a 24-V brake, install a separate power supply for the 24-VDC power supply from other power supplies, such as the one for the I/O signals of the CN1 connector.
If the power supply is shared, the I/O signals may malfunction.

Speed Control with a Linear Servomotor

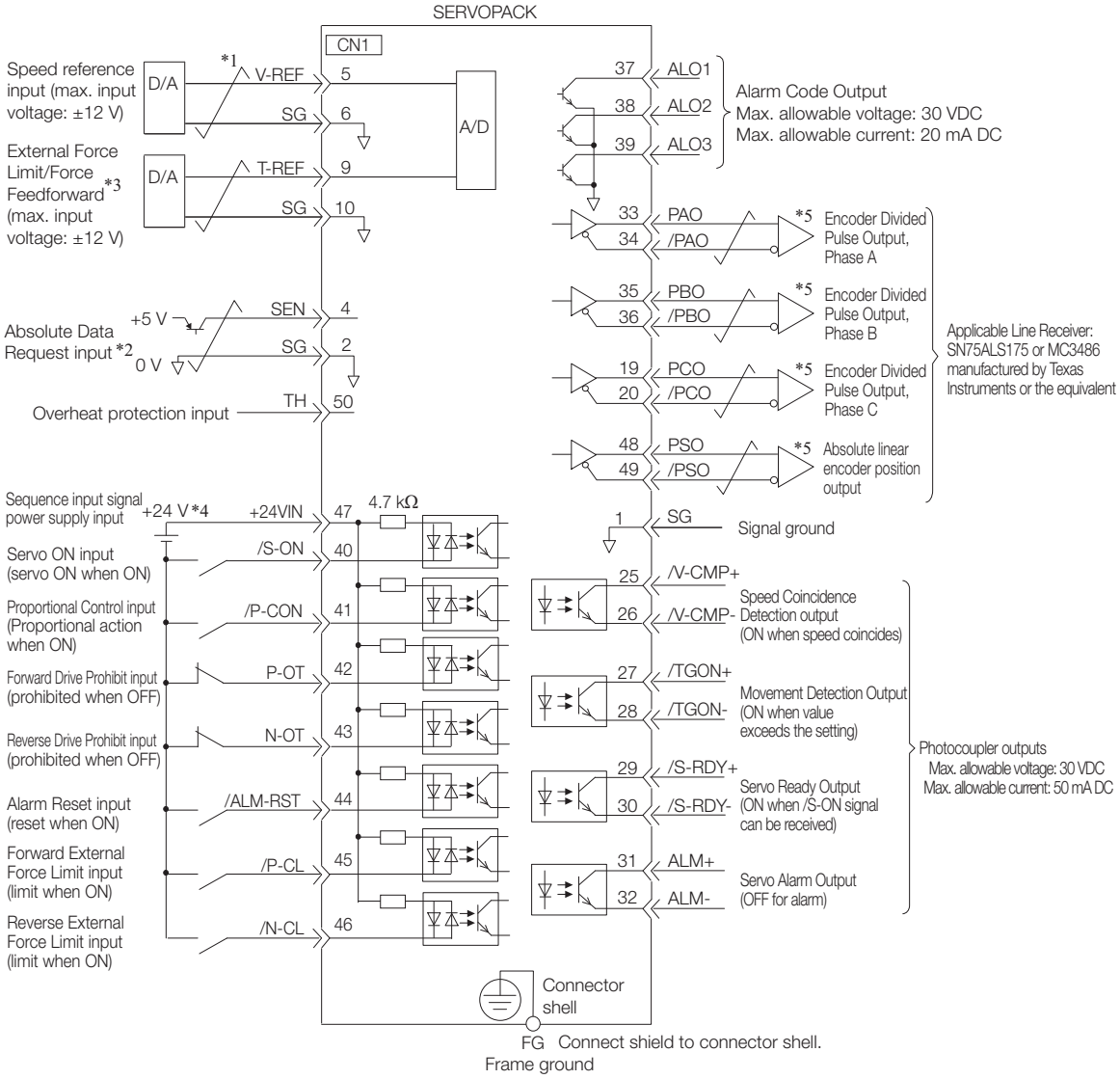

*1. represents twisted-pair wires.
*2. Connect these when using an absolute linear encoder.
*3. You can enable this function with a parameter setting.
*4. The 24-VDC power supply is not provided by Yaskawa. Use a 24-VDC power supply with double insulation or reinforced insulation.
*5. Always use line receivers to receive the output signals.

Note: If you use a 24-V brake, install a separate power supply for the 24-VDC power supply from other power supplies, such as the one for the I/O signals of the CN1 connector.
If the power supply is shared, the I/O signals may malfunction.

Position Control with a Rotary Servomotor

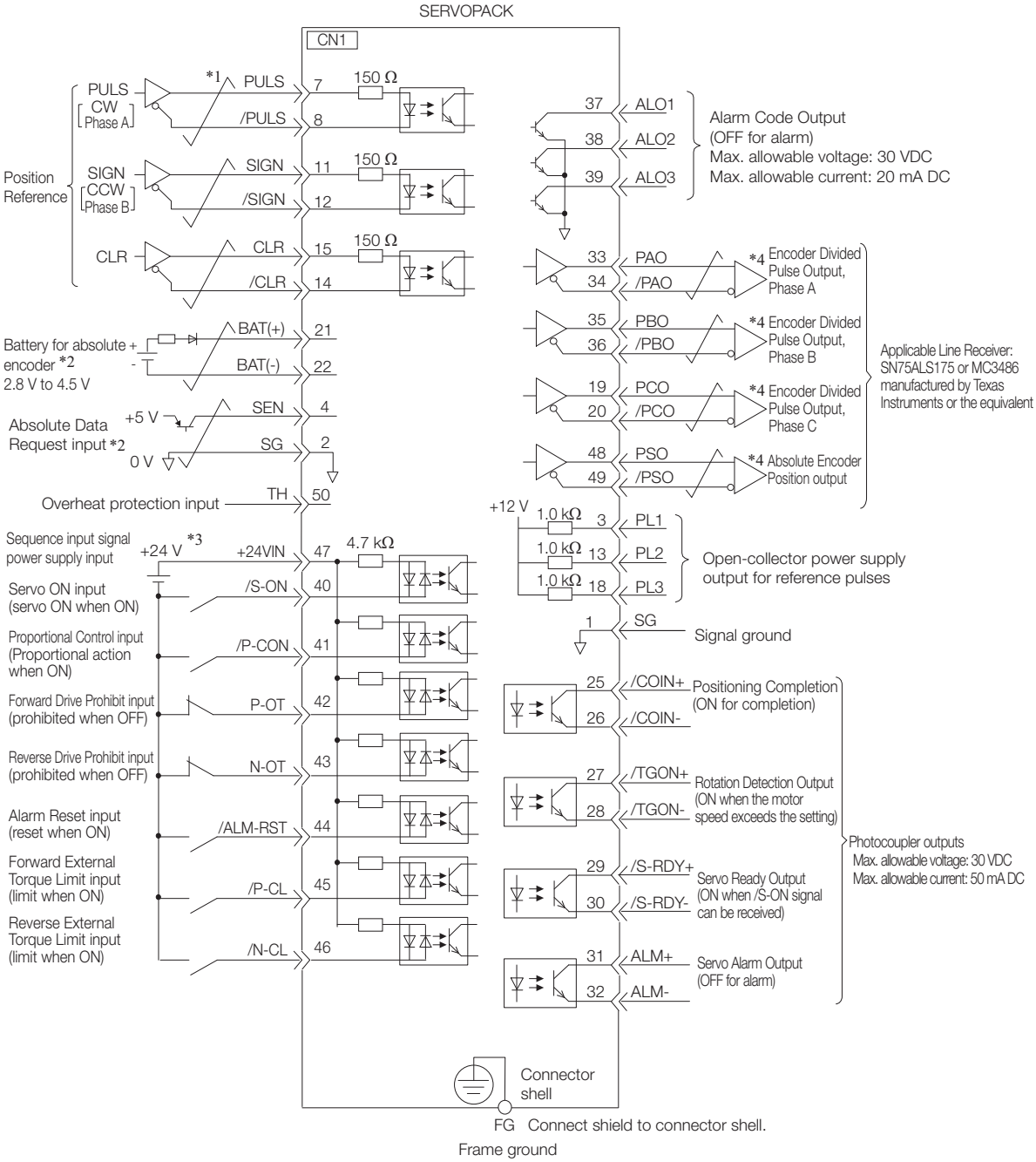

*1. represents twisted-pair wires.

*2. Connect these when using an absolute encoder. If the Encoder Cable with a Battery Case is connected, do not connect a backup battery.

*3. The 24-VDC power supply is not provided by Yaskawa. Use a 24-VDC power supply with double insulation or reinforced insulation.

*4. Always use line receivers to receive the output signals.

Note: If you use a 24-V brake, install a separate power supply for the 24-VDC power supply from other power supplies, such as the one for the I/O signals of the CN1 connector.
If the power supply is shared, the I/O signals may malfunction.

Position Control with a Linear Servomotor

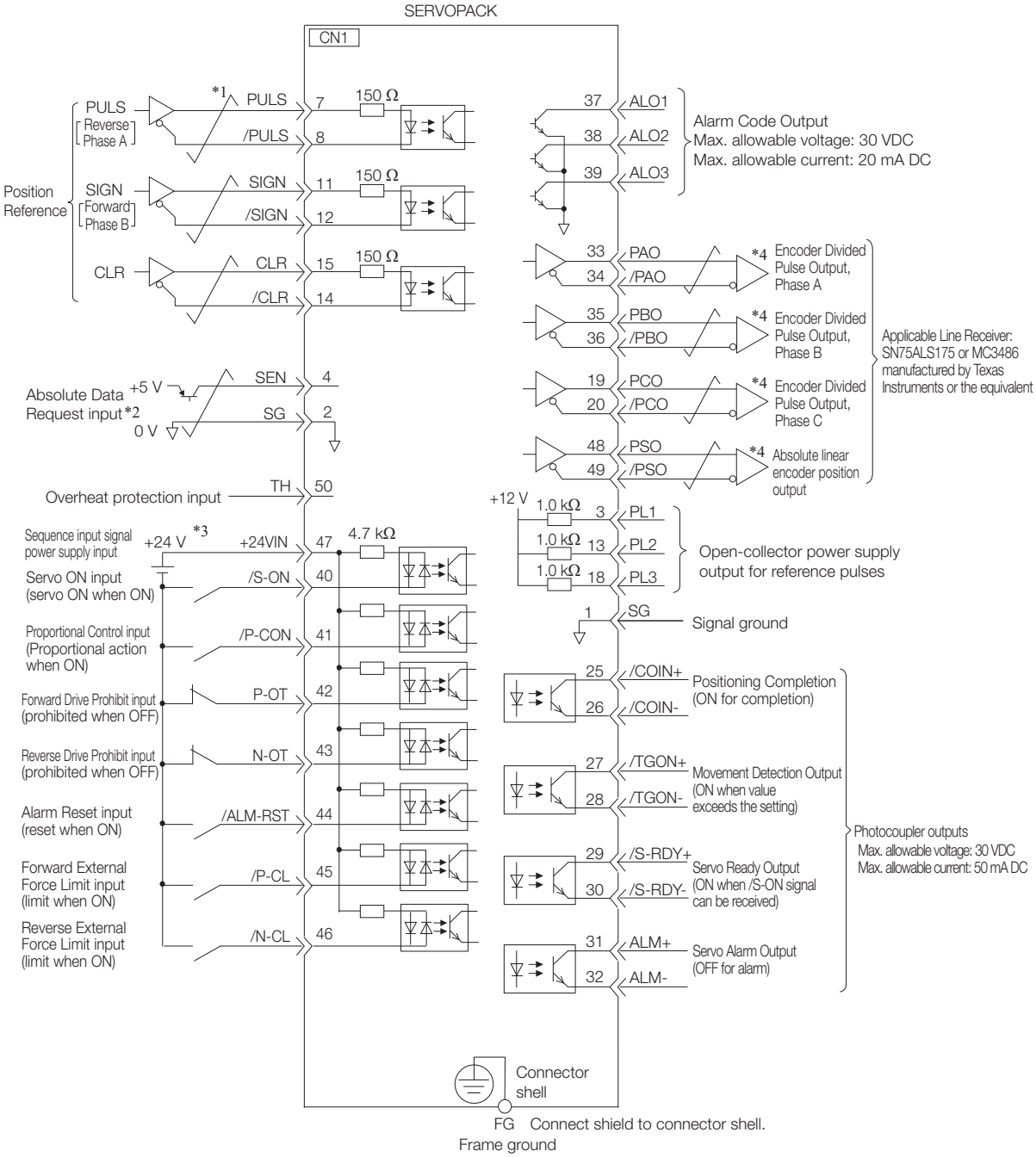

*1. represents twisted-pair wires.
*2. Connect when using an absolute linear encoder.
*3. The 24-VDC power supply is not provided by Yaskawa. Use a 24-VDC power supply with double insulation or reinforced insulation.
*4. Always use line receivers to receive the output signals.

Note: If you use a 24-V brake, install a separate power supply for the 24-VDC power supply from other power supplies, such as the one for the I/O signals of the CN1 connector.
If the power supply is shared, the I/O signals may malfunction.

Torque Control with a Rotary Servomotor

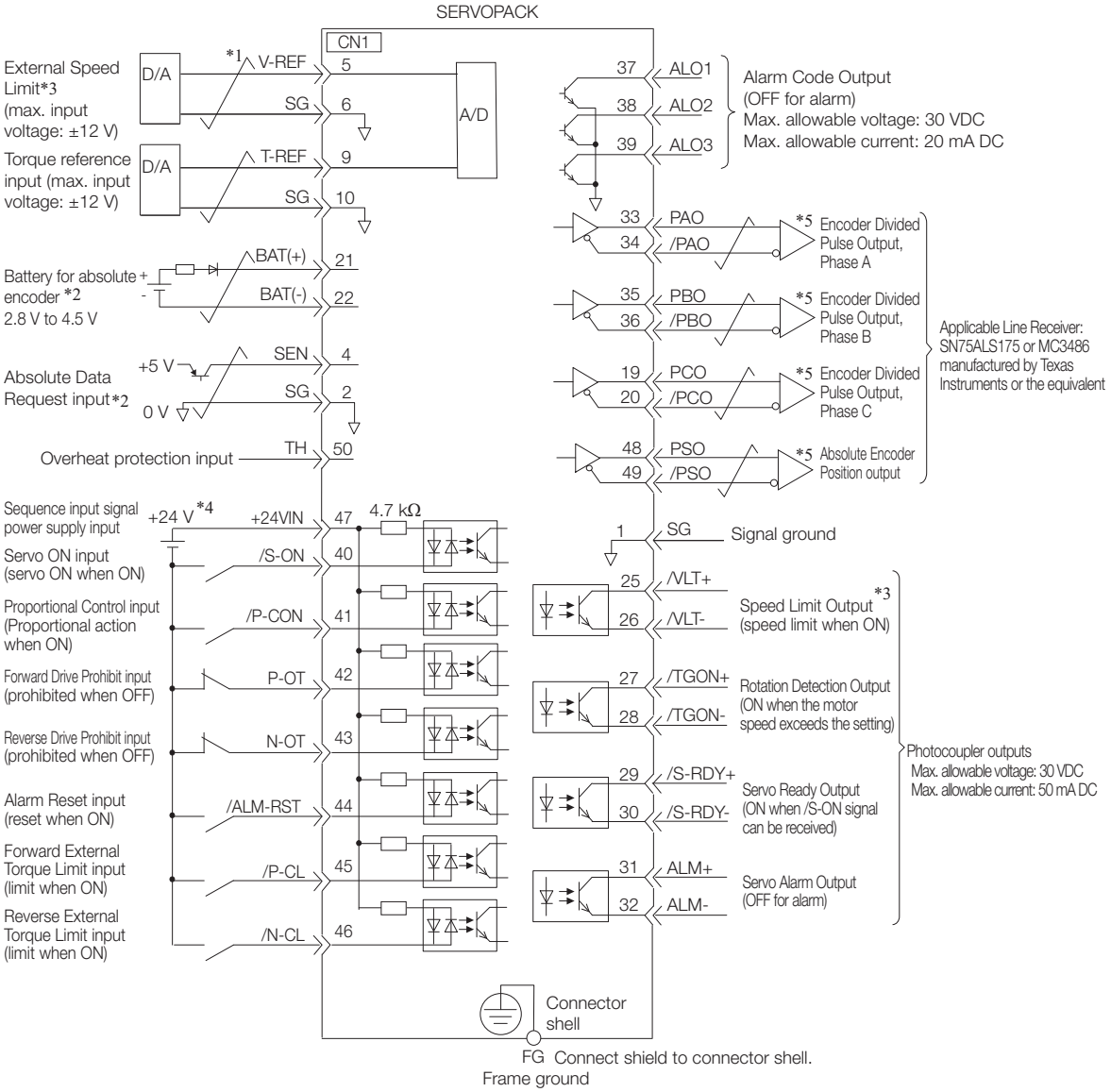

*1. represents twisted-pair wires.

*2. Connect these when using an absolute encoder. If the Encoder Cable with a Battery Case is connected, do not connect a backup battery.

*3. You can enable this function with a parameter setting.

*4. The 24-VDC power supply is not provided by Yaskawa. Use a 24-VDC power supply with double insulation or reinforced insulation.

*5. Always use line receivers to receive the output signals.

Note: If you use a 24-V brake, install a separate power supply for the 24-VDC power supply from other power supplies, such as the one for the I/O signals of the CN1 connector.
If the power supply is shared, the I/O signals may malfunction.

Torque Control with a Linear Servomotor

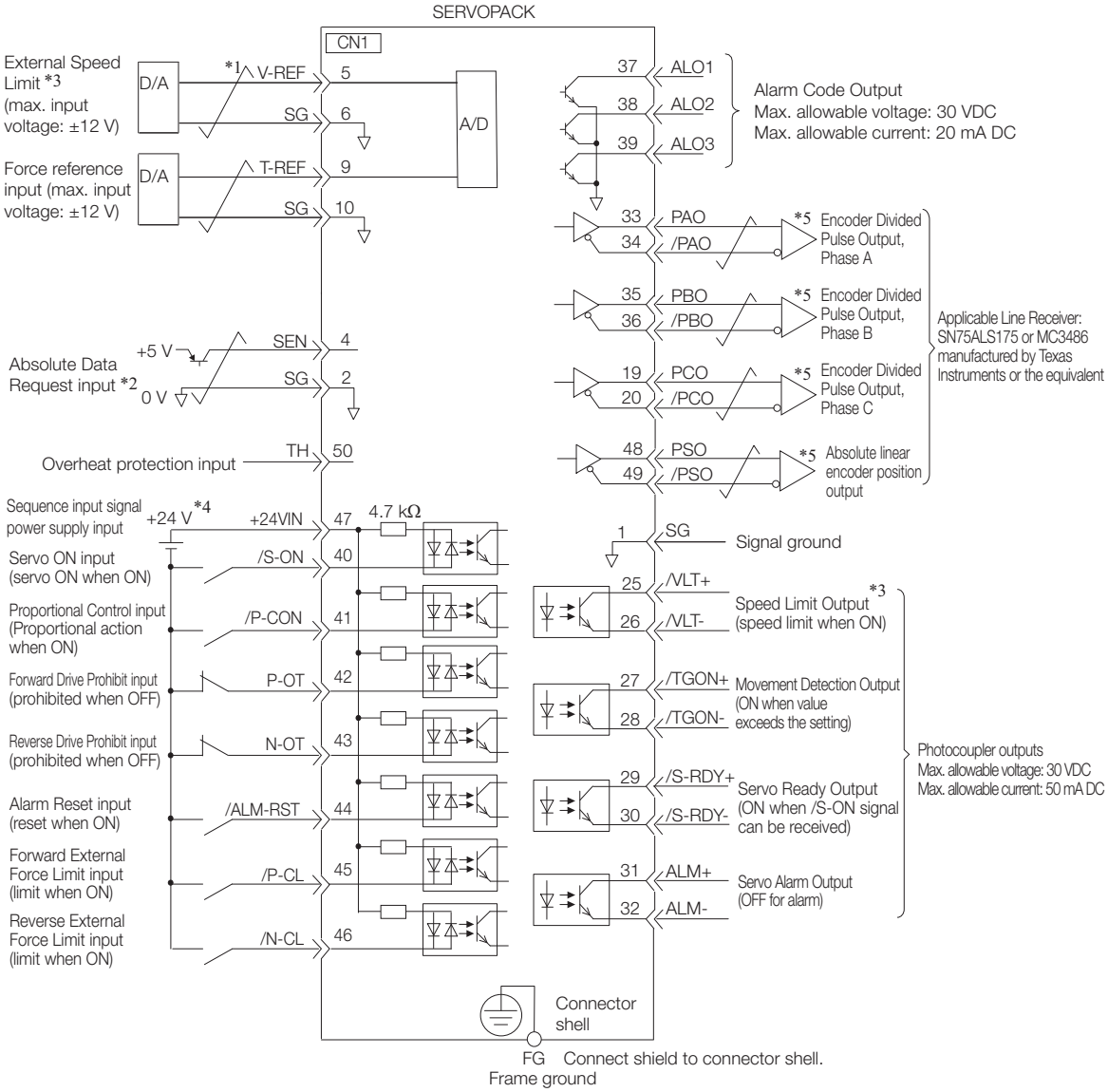

*1. represents twisted-pair wires.
*2. Connect when using an absolute linear encoder.
*3. You can enable this function with a parameter setting.
*4. The 24-VDC power supply is not provided by Yaskawa. Use a 24-VDC power supply with double insulation or reinforced insulation.
*5. Always use line receivers to receive the output signals.

Note: If you use a 24-V brake, install a separate power supply for the 24-VDC power supply from other power supplies, such as the one for the I/O signals of the CN1 connector.
If the power supply is shared, the I/O signals may malfunction.

4.5.4 I/O Circuits

Reference Input Circuits

◆ Analog Input Circuits

This section describes CN1 connector terminals 5-6 (Speed Reference Input) and 9-10 (Torque Reference Input).

The analog signals are used as either speed or torque reference signals. The input impedance is as follows:

- Speed Reference Input: Approx. 14 kΩ
- Torque Reference Input: Approx. 14 kΩ

The maximum allowable voltage for input signals is ±12 V.

Analog Voltage Input Circuit (Example for D/A)	Analog Voltage Input Circuit (Wiring Example for Forward Operation)
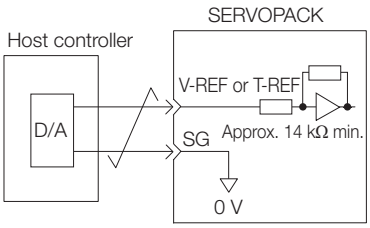	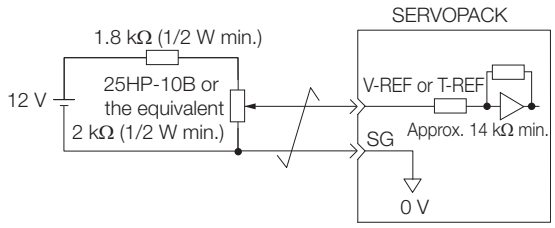

◆ Position Reference Input Circuits

This section describes CN1 connector terminals 7-8 (Reference Pulse Input), 11-12 (Reference Sign Input), and 15-14 (Clear Input).

The output circuits for the reference pulses and Position Deviation Clear signal from the host controller can be either line-driver outputs or open-collector outputs. The following diagrams show these by output type.

Line-Driver Output Circuit	Open-Collector Output Circuits (12-V Power Supply in SERVOPACK)
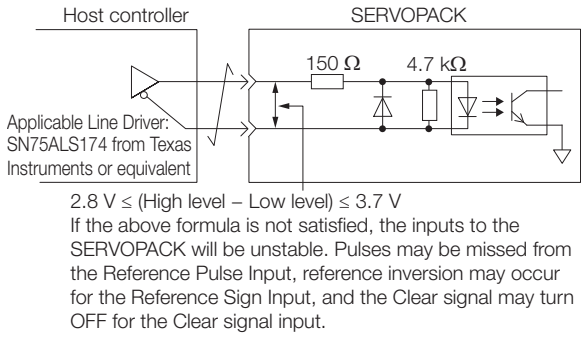	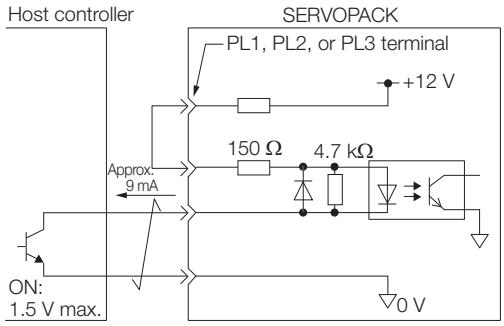

Important

- Precaution When Host Controller Uses Open-Collector Output with User-Supplied Power Supply
  The SERVOPACK may fail depending on the relationship between the pull-up voltage (Vcc) and the pull-up resistance (R1). Before you wire the circuits, confirm that the specifications of the host controller satisfy the values shown in the following table.

Pull-Up Voltage (Vcc)	Pull-Up Resistance (R1)	Output Current (i)
24 V	1.8 kΩ to 2.7 kΩ	20 mA max.
12 V max.	820 Ω to 1.5 kΩ	
5 V max.	180 Ω to 470 Ω	

Circuit Example for Open-Collector Outputs

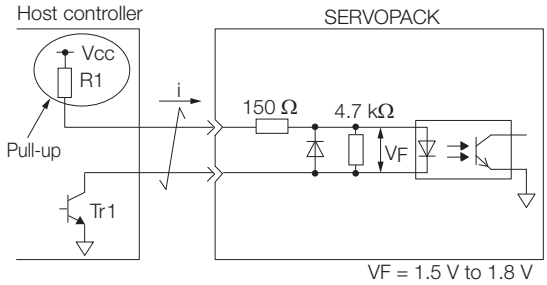

Sequence Input Circuits

◆ Photocoupler Input Circuits

This section describes CN1 connector terminals 40 to 47. The circuits are connected through relay or open-collector transistor circuits. If you connect through a relay, use a low-current relay. If you do not use a low-current relay, a faulty contact may result.

Examples for Relay Circuits	Examples for Open-Collector Circuits
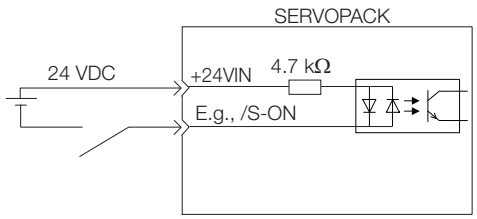	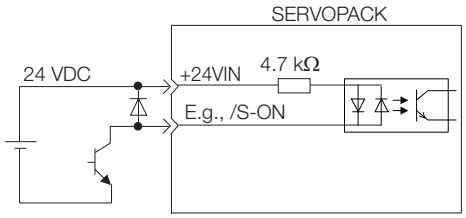

Note: The 24-VDC external power supply capacity must be 50 mA minimum.

Information Refer to the following section for the interface for the SEN signal input circuit.
☞ *6.12.2 Structure of the Position Data of the Absolute Encoder* on page 6-75

The SERVOPACK input circuits use bidirectional photocouplers. Select either a sink circuit or source circuit according to the specifications required by the machine.

Note: The connection examples in *4.5.3 I/O Signal Wiring Examples* on page 4-39 are for sink circuit connections.

Sink Circuits	Source Circuits
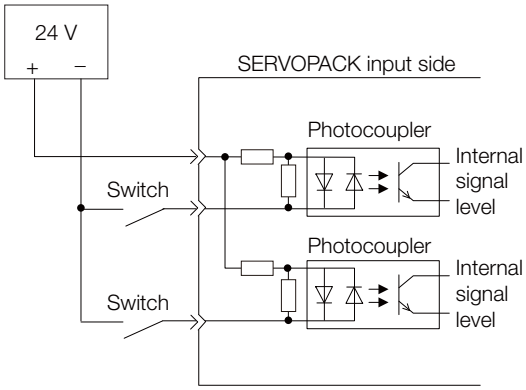	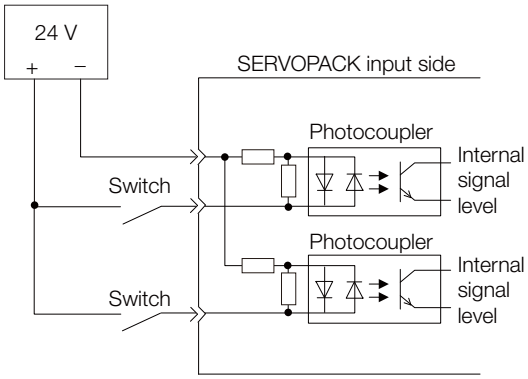

Input Signal Polarity		Input Signal Polarity	
Photocoupler	Internal Signal Level	Photocoupler	Internal Signal Level
ON	Low level	ON	Low level
OFF	High level	OFF	High level

Sequence Output Circuits

> **Important**
> Incorrect wiring or incorrect voltage application to the output circuits may cause short-circuit failures.
> If a short-circuit failure occurs as a result of any of these causes, the holding brake will not work. This could damage the machine or cause an accident that may result in death or injury.

◆ Open-Collector Output Circuits

This section describes CN1 connector terminals 37 to 39 (Alarm Code Output).

The Alarm Code (ALO1, ALO2, and ALO3) signals are output from open-collector transistor output circuits. Connect an open-collector output circuit to a photocoupler, relay, or line-receiver circuit.

Example for Photocoupler Circuit	Example for Relay Circuit
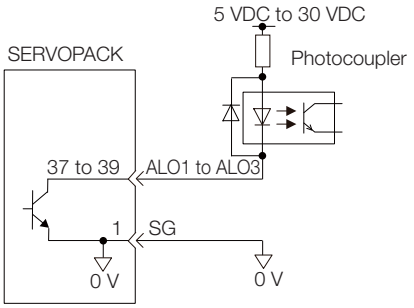	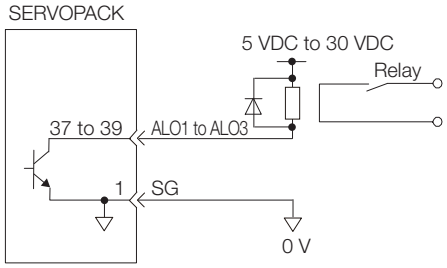

Example for Line Receiver Circuit

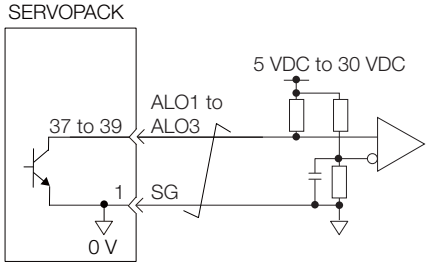

Note: The maximum allowable voltage and maximum allowable current for open-collector output circuits are as follows:
- Maximum allowable voltage: 30 VDC
- Maximum allowable current: 20 mA DC

◆ Photocoupler Output Circuits

Photocoupler output circuits are used for the ALM (Servo Alarm), /S-RDY (Servo Ready), and other sequence output signals. Connect a photocoupler output circuit to a photocoupler, relay, or line-receiver circuit.

Example for Photocoupler Circuit	Example for Relay Circuit
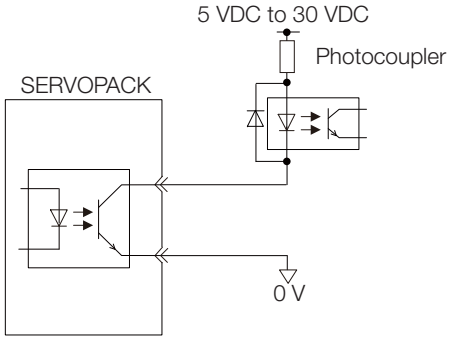	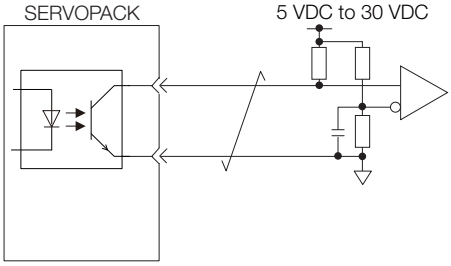
Example for Line Receiver Circuit	
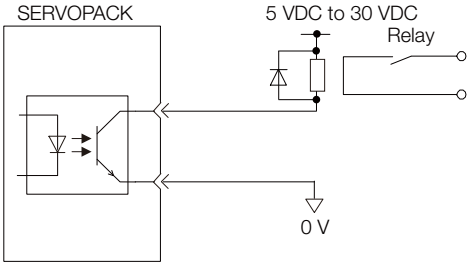	

Note: The maximum allowable voltage and current range for photocoupler output circuits are as follows:
- Maximum allowable voltage: 30 VDC
- Current range: 5 mA to 50 mA DC

◆ Line-Driver Output Circuits

This section describes CN1 connector pins 33-34 (Phase-A Signal), 35-36 (Phase-B Signal), 19-20 (Phase-C Signal) and 48-49 (Phase-S Signal).

The serial data from the encoder is converted to two-phase (phases A and B) pulses. The resulting output signals (PAO, /PAO and PBO, /PBO), origin pulse signal (PCO and /PCO), and the absolute encoder position output signals (PSO and /PSO) are output with line-driver output circuits. Connect the line-driver output circuits to line-receiver circuits at the host controller.

Example for Line-Receiver Circuit

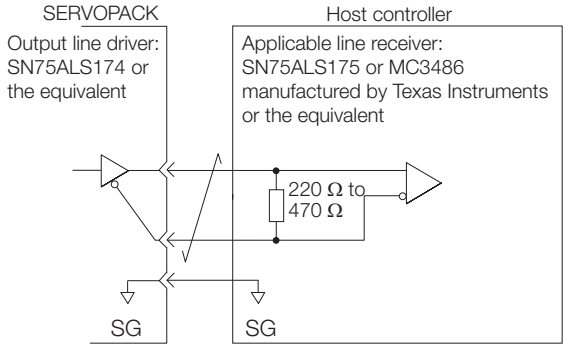

4.6 Connecting Safety Function Signals

This section describes the wiring required to use a safety function.

Refer to the following chapter for details on the safety function.

☞ *Chapter 11 Safety Functions*

4.6.1 Pin Arrangement of Safety Function Signals (CN8)

Pin No.	Signal	Name	Function
1	–	– (Do not use these pins because they are connected to internal circuits.)	
2	–		
3	/HWBB1-	Hard Wire Base Block Input 1	For a hard wire base block input. The base block (motor power turned OFF) is in effect when the signal is OFF.
4	/HWBB1+		
5	/HWBB2-	Hard Wire Base Block Input 2	
6	/HWBB2+		
7	EDM1-	External Device Monitor Output	Turns ON when the /HWBB1 and the /HWBB2 signals are input and the SERVOPACK enters a base block state.
8	EDM1+		

4.6.2 I/O Circuits

Important

For safety function signal connections, the input signal is the 0-V common and the output signal is a source output. This is opposite to other signals described in this manual.
To avoid confusion, the ON and OFF status of signals for the safety function are defined as follows:

ON: The state in which the relay contacts are closed or the transistor is ON and current flows into the signal line.
OFF: The state in which the relay contacts are open or the transistor is OFF and no current flows into the signal line.

Safety Input Circuits

Use a 0-V common to connect the safety function signals. You must connect redundant input signals.

Input Signal Connection Example

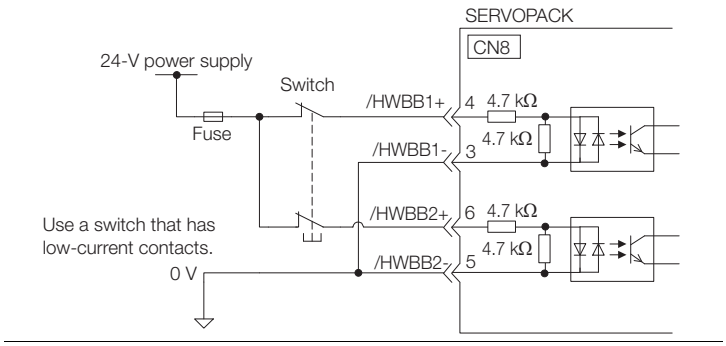

◆ Input (HWBB) Signal Specifications

Type	Signal	Connector Pin No.	Status	Meaning
Inputs	/HWBB1	CN8-4 CN8-3	ON (closed)	Does not activate the HWBB (normal operation).
			OFF (open)	Activates the HWBB (motor current shut-OFF request).
	/HWBB2	CN8-6 CN8-5	ON (closed)	Does not activate the HWBB (normal operation).
			OFF (open)	Activates the HWBB (motor current shut-OFF request).

The input (HWBB) signals have the following electrical characteristics.

Item	Characteristics	Remarks
Internal Impedance	4.7 kΩ	–
Operating Voltage Range	+24 V ±20%	–
Maximum Delay Time	8 ms	Time from /HWBB1 and /HWBB2 signals turning OFF until HWBB is activated

Diagnostic Output Circuits

The EDM1 output signal uses a source circuit. The following figure shows a connection example.

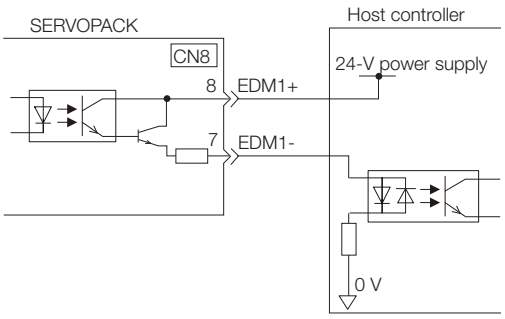

◆ EDM1 Output Signal Specifications

Type	Signal	Pin No.	Output Status	Meaning
Output	EDM1	CN8-8 CN8-7	ON	Both the /HWBB1 and /HWBB2 signals are operating normally.
			OFF	The /HWBB1 signal, the /HWBB2 signal, or both are not operating.

The electrical characteristics of the EDM1 signal are as follows:

Item	Characteristics	Remarks
Maximum Allowable Voltage	30 VDC	–
Maximum Allowable Current	50 mA DC	–
Maximum ON Voltage Drop	1.0 V	Voltage between EDM1+ and EDM1- when current is 50 mA
Maximum Delay Time	8 ms	Time from a change in /HWBB1 or /HWBB2 until a change in EDM1

4.7 Connecting the Other Connectors

4.7.1 Serial Communications Connector (CN3)

To use a Digital Operator or to connect a computer with an RS-422 cable, connect CN3 on the SERVOPACK.

Refer to the following manual for the operating procedures for the Digital Operator.
Σ-7-Series Digital Operator Operating Manual (Manual No.: SIEP S800001 33)

4.7.2 Computer Connector (CN7)

To use the SigmaWin+ Engineering Tool, connect the computer on which the SigmaWin+ is installed to CN7 on the SERVOPACK.

Refer to the following manual for the operating procedures for the SigmaWin+.
AC Servo Drive Engineering Tool SigmaWin+ Operation Manual (Manual No.: SIET S800001 34)

> **Important**
> Use the Yaskawa-specified cables. Operation will not be dependable due to low noise resistance with any other cable.

4.7.3 Analog Monitor Connector (CN5)

To use an analog monitor, connect CN5 on the SERVOPACK.

- Wiring Example

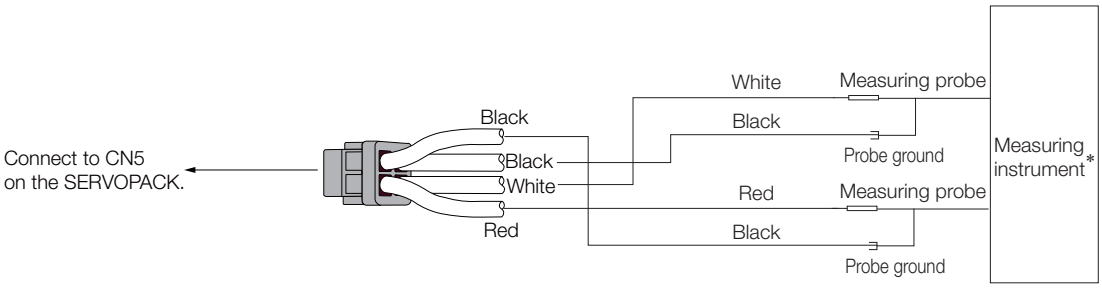

* The measuring instrument is not provided by Yaskawa.

Refer to the following section for information on the monitoring methods for an analog monitor.
9.3 Monitoring Machine Operation Status and Signal Waveforms on page 9-8

Basic Functions That Require Setting before Operation

5

This chapter describes the basic functions that must be set before you start servo system operation. It also describes the setting methods.

5.1 Manipulating Parameters (Pn□□□) 5-4

5.1.1 Parameter Classification 5-4
5.1.2 Notation for Parameters 5-5
5.1.3 Parameter Setting Methods 5-6
5.1.4 Write Prohibition Setting for Parameters 5-8
5.1.5 Initializing Parameter Settings 5-11

5.2 Control Method Selection 5-13

5.3 Power Supply Type Settings for the Main Circuit and Control Circuit . .5-14

5.3.1 AC Power Supply Input/DC Power Supply Input Setting 5-14
5.3.2 Single-phase AC Power Supply Input/ Three-phase AC Power Supply Input Setting . . 5-15

5.4 Automatic Detection of Connected Motor . .5-16

5.5 Functions and Settings for the /S-ON (Servo ON) Signal . . 5-17

5.5.1 Function of the /S-ON (Servo ON) Signal 5-17
5.5.2 Setting to Keep the Servo ON and Supply Power to the Motor Continuously 5-17

5.6 Motor Direction Setting 5-18

5.7 Setting the Linear Encoder Pitch 5-19

5.8 Writing Linear Servomotor Parameters . . . 5-20

5.9 Selecting the Phase Sequence for a Linear Servomotor . .5-24

5.10 Polarity Sensor Setting 5-26

5.11 Polarity Detection 5-27

5.11.1 Restrictions 5-27
5.11.2 Using the /S-ON (Servo ON) Signal to Perform Polarity Detection 5-28
5.11.3 Using the /P-DET (Polarity Detection) Signal to Perform Polarity Detection 5-29
5.11.4 Using a Tool Function to Perform Polarity Detection 5-30

5.12 Overtravel and Related Settings 5-31

5.12.1 Overtravel Signals 5-32
5.12.2 Setting to Enable/Disable Overtravel 5-32
5.12.3 Motor Stopping Method for Overtravel 5-33
5.12.4 Overtravel Warnings 5-34

5.13 Holding Brake 5-36

5.13.1 Brake Operating Sequence 5-36
5.13.2 /BK (Brake) Signal 5-37
5.13.3 Output Timing of /BK (Brake) Signal When the Servomotor Is Stopped 5-38
5.13.4 Output Timing of /BK (Brake) Signal When the Servomotor Is Operating 5-39

5.14 Motor Stopping Methods for Servo OFF and Alarms . . 5-41

5.14.1 Stopping Method for Servo OFF 5-42
5.14.2 Servomotor Stopping Method for Alarms 5-42

5.15 Motor Overload Detection Level 5-44

5.15.1 Detection Timing for Overload Warnings (A.910) 5-44
5.15.2 Detection Timing for Overload Alarms (A.720) . .5-45

5.16 Electronic Gear Settings 5-46

5.16.1 Electronic Gear Ratio Settings 5-47
5.16.2 Electronic Gear Ratio Setting Examples 5-51

5.17 Resetting the Absolute Encoder 5-52

5.17.1 Precautions on Resetting 5-52
5.17.2 Preparations 5-52
5.17.3 Applicable Tools 5-53
5.17.4 Operating Procedure 5-53

5.18 Setting the Origin of the Absolute Encoder . . 5-55

5.18.1 Setting the Origin of the Absolute Linear Encoder 5-55

5.19 Setting the Regenerative Resistor Capacity . . 5-58

5.1 Manipulating Parameters (Pn□□□)

This section describes the classifications, notation, and setting methods for the parameters given in this manual.

5.1.1 Parameter Classification

There are the following two types of SERVOPACK parameters.

Classification	Meaning
Setup Parameters	Parameters for the basic settings that are required for operation.
Tuning Parameters	Parameters that are used to adjust servo performance.

Important

When you edit parameters with the SigmaWin+, setup parameters and tuning parameters are displayed.
When you edit parameters with a Panel Operator or Digital Operator, only setup parameters are displayed by default. To edit tuning parameters, set Pn00B to n.□□□1 (Display all parameters).

Parameter		Meaning	When Enabled	Classification
Pn00B	n.□□□0 (default setting)	Display only setup parameters.	After restart	Setup
	n.□□□1	Display all parameters.		

The setting method for each type of parameter is described below.

Setup Parameters

You can use the Panel Operator, Digital Operator, or SigmaWin+ to set the setup parameters individually.

Information

We recommend that you use the Setup Wizard of the SigmaWin+ to easily set the required setup parameters by setting the operating methods, machine specifications, and I/O signals according to on-screen Wizard instructions.

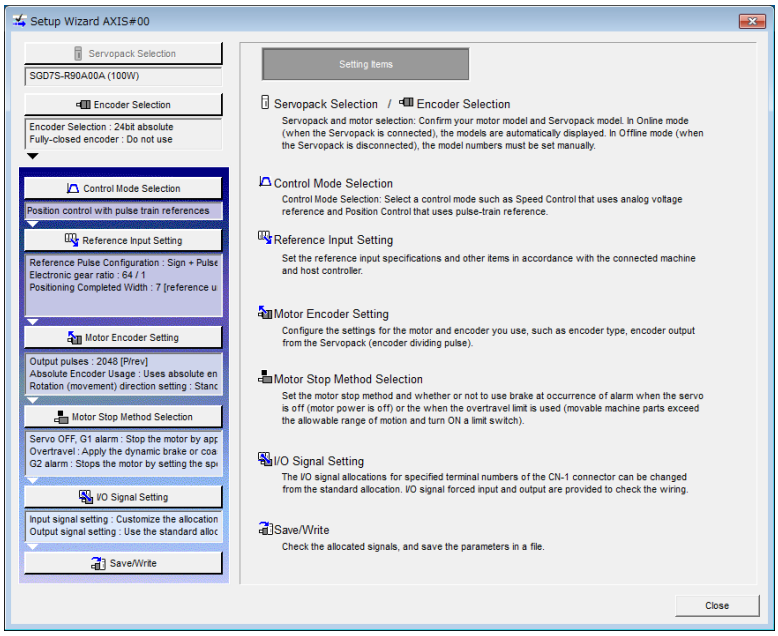

Tuning Parameters

Normally the user does not need to set the tuning parameters individually.

Use the various SigmaWin+ tuning functions to set the related tuning parameters to increase the response even further for the conditions of your machine. Refer to the following sections for details.

☞ *8.6 Autotuning without Host Reference* on page 8-24
☞ *8.7 Autotuning with a Host Reference* on page 8-35
☞ *8.8 Custom Tuning* on page 8-42

You can also set the tuning parameters individually to make adjustments. Refer to the following section for details.

☞ *8.13 Manual Tuning* on page 8-76

5.1.2 Notation for Parameters

There are two types of notation used for parameters that depend on whether the parameter requires a numeric setting (parameter for numeric setting) or requires the selection of a function (parameter for selecting a function).

- Parameters for Numeric Settings

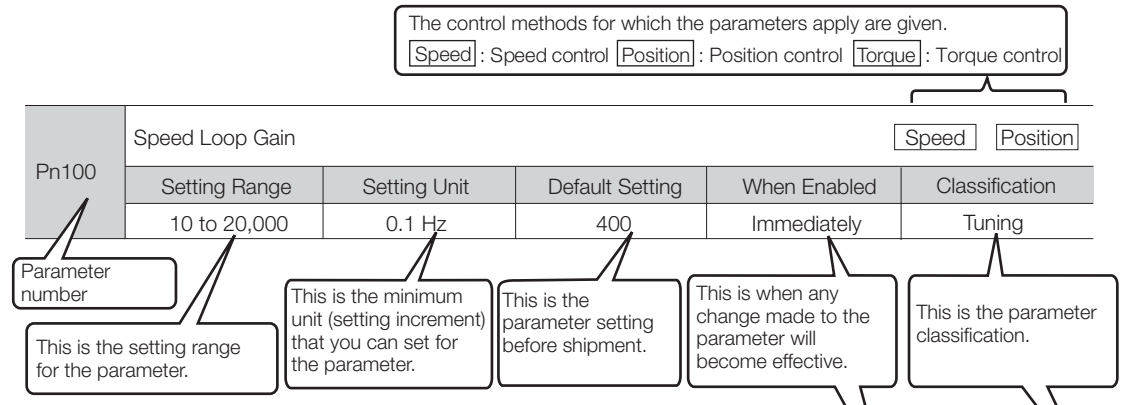

- Parameters for Selecting Functions

Parameter		Meaning	When Enabled	Classification
Pn002	n.□0□□ (default setting)	Use the encoder according to encoder specifications.	After restart	Setup
	n.□1□□	Use the encoder as an incremental encoder.		
	n.□2□□	Use the encoder as a single-turn absolute encoder.		

Parameter number

The notation "n.□□□□" indicates a parameter for selecting functions.
Each □ indicates the setting for one digit.
The notation shown here means that the third digit from the right is set to 2.

This column explains the selections for the function.

5.1.3 Parameter Setting Methods

You can use the SigmaWin+, a Digital Operator, or the Panel Operator to set parameters. Use the following procedure to set the parameters.

Setting Parameters with the SigmaWin+

1. Click the Servo Drive Button in the workspace of the Main Window of the SigmaWin+.

2. Select **Edit Parameters** in the Menu Dialog Box.
   The Parameter Editing Dialog Box will be displayed.

3. Click the cell of the parameter to edit.
   If the parameter to edit is not displayed in the Parameter Editing Dialog Box, click the ▲ or ▼ Button to display the parameter to edit.

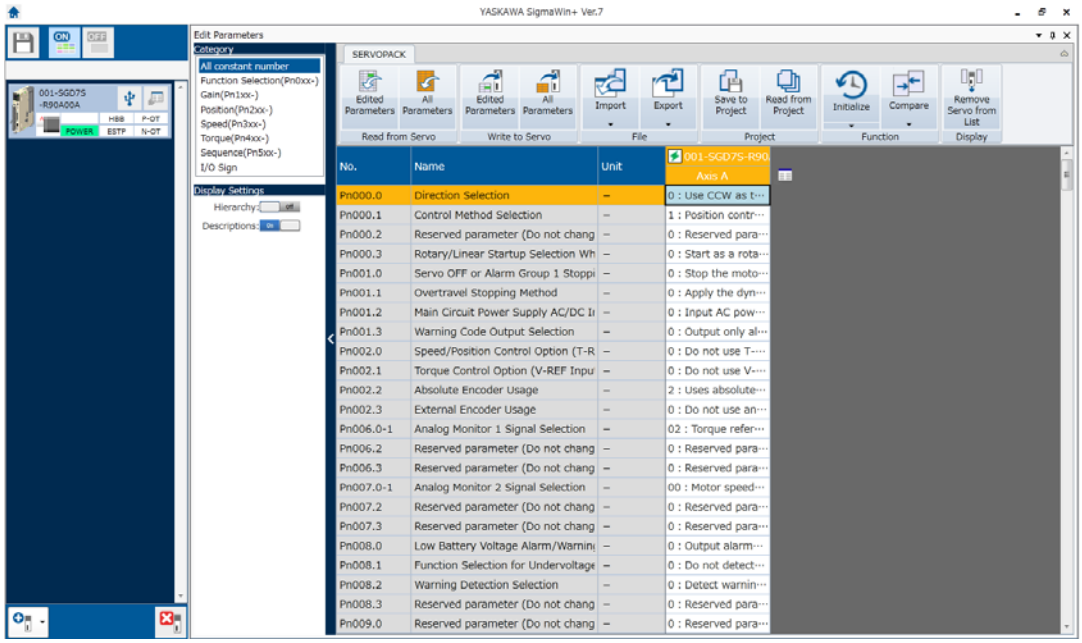

4. Change the setting of the parameter.

   Information
   1. For a parameter for a numeric setting, input the numeric setting.
   2. If the parameter requires selection of a function, select the function from the list of selections.

5. Press the **Enter** Key.
   The background of the edited parameter cell will change to green.

6. Select **Edited Parameters** in the **Write to Servo** Group.

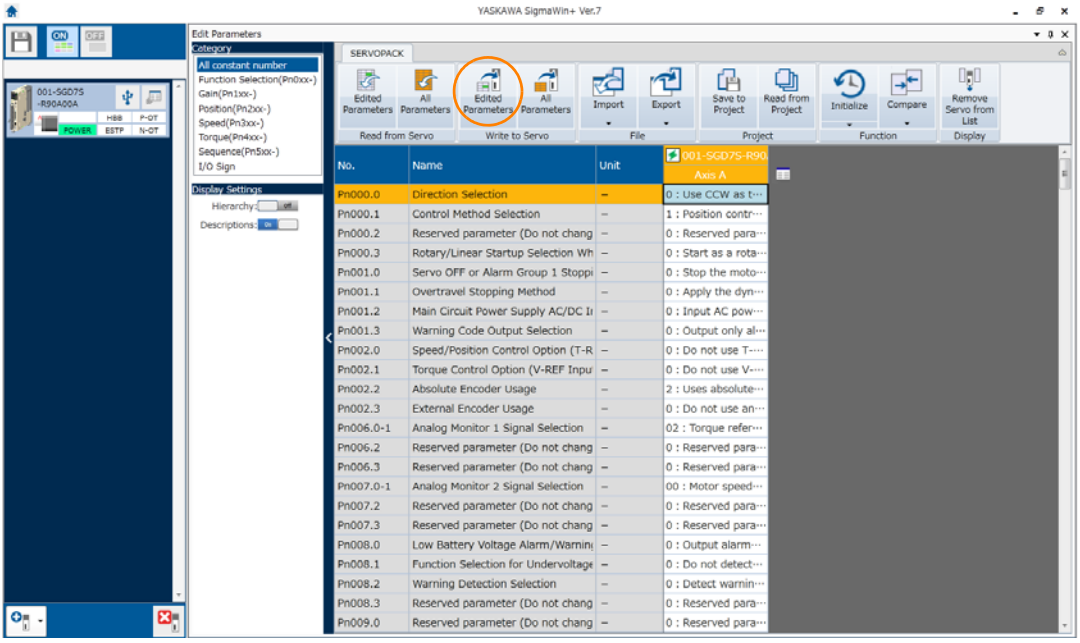

The edited parameters are written to the SERVOPACK and the backgrounds of the cells change to white.

7. Click the **OK** Button.

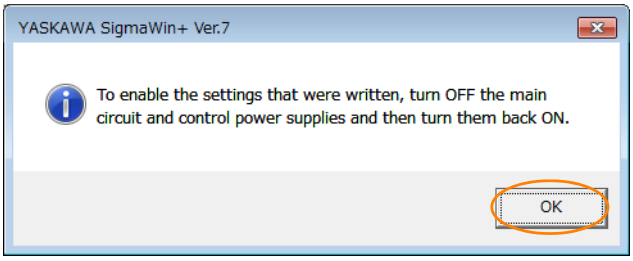

8. To enable changes to the settings, turn the power supply to the SERVOPACK OFF and ON again.

This concludes the procedure to set the parameters.

Setting Parameters with a Digital Operator

Refer to the following manual for information on setting the parameters with a Digital Operator.

Σ-7-Series Digital Operator Operating Manual (Manual No.: SIEP S800001 33)

Setting Parameters with the Panel Operator

Refer to the following section for information on setting the parameters with the Panel Operator.

13.2 Parameter (Pn□□□) Operations on the Panel Operator on page 13-6

5.1.4 Write Prohibition Setting for Parameters

You can prohibit writing parameters from the Panel Operator or the Digital Operator.
Even if you do, you will still be able to change parameter settings from the SigmaWin+.

Preparations

No preparations are required.

Applicable Tools

The following table lists the tools that you can use to change the Write Prohibition Setting.

Tool	Fn No./Function Name	Reference
Panel Operator	Fn010	*13.4.15 Write Prohibition Setting (Fn010)* on page 13-23
Digital Operator	Fn010	Σ-7-Series Digital Operator Operating Manual (Manual No.: SIEP S800001 33)
SigmaWin+	***Others - Write Prohibited Setting***	*Operating Procedure* on page 5-8

Operating Procedure

Use the following procedure to prohibit or permit writing parameter settings.

1. Click the Servo Drive Button in the workspace of the Main Window of the SigmaWin+.
2. Select **Write Prohibited Setting** in the Menu Dialog Box.
   The Write Prohibition Setting Dialog Box will be displayed.
3. Press the ▼ or ▲ for the rightmost digit and set one of the following.
   0000: Writing is permitted (default setting).
   0001: Writing is prohibited.

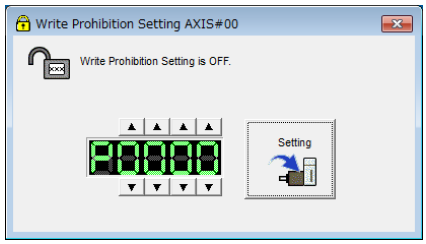

4. Click the **Setting** Button.

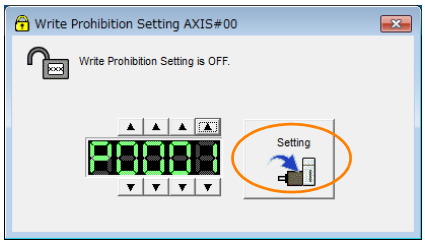

5. Click the **OK** Button.
   The setting will be written to the SERVOPACK.

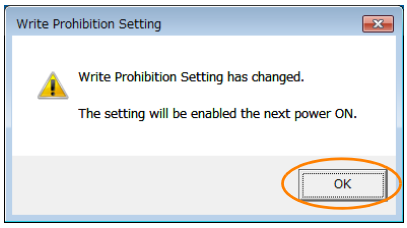

6. To enable the new setting, turn the power supply to the SERVOPACK OFF and ON again.

This concludes the procedure to prohibit or permit writing parameter settings.

Restrictions

If you prohibit writing parameter settings, you will no longer be able to execute some functions. Refer to the following table.

SigmaWin+		Panel Operator or Digital Operator		When Writing Is Prohibited	Reference
Button in Menu Dialog Box	SigmaWin+ Function Name	Fn No.	Utility Function Name		
Basic Functions	Initialize*1	Fn005	Initializing Parameters	Cannot be executed.	page 5-11
	Software Reset	Fn030	Software Reset	Can be executed.	page 6-97
	Product Information	Fn011	Display Servomotor Model	Can be executed.	page 9-2
		Fn012	Display Software Version	Can be executed.	
		Fn01E	Display SERVOPACK and Servomotor IDs	Can be executed.	
		Fn01F	Display Servomotor ID from Feedback Option Module	Can be executed.	
Encoder Setting	Reset Absolute Encoder	Fn008	Reset Absolute Encoder	Cannot be executed.	page 5-52
	Multi-turn Limit Setup	Fn013	Multiturn Limit Setting after Multiturn Limit Disagreement Alarm	Cannot be executed.	page 6-85
	Search Origin*2	Fn003	Origin Search	Cannot be executed.	page 7-25
	Zero Point Position Setting	Fn020	Set Absolute Linear Encoder Origin	Cannot be executed.	page 5-55
	Polarity Detection	Fn080	Polarity Detection	Cannot be executed.	page 5-30
Trouble-shooting	Display Alarm	Fn000	Display Alarm History	Can be executed.	page 12-42
		Fn006	Clear Alarm History	Cannot be executed.	page 12-43
		Fn014	Reset Option Module Configuration Error	Cannot be executed.	page 12-44
	Reset Motor Type Alarm	Fn021	Reset Motor Type Alarm	Cannot be executed.	page 12-46
Operation	Jog	Fn002	Jog	Cannot be executed.	page 7-7
	Program JOG Operation	Fn004	Jog Program	Cannot be executed.	page 7-20

Continued on next page.

Continued from previous page.

SigmaWin+		Panel Operator or Digital Operator		When Writing Is Prohibited	Reference
Button in Menu Dialog Box	SigmaWin+ Function Name	Fn No.	Utility Function Name		
Tuning	Tuning - Autotuning without Host Reference	Fn201	Advanced Autotuning without Reference	Cannot be executed.	page 8-24
	Tuning - Autotuning with Host Reference	Fn202	Advanced Autotuning with Reference	Cannot be executed.	page 8-35
	Tuning - Custom Tuning	Fn203	One-Parameter Tuning	Cannot be executed.	page 8-42
	Tuning - Custom Tuning - Adjust Anti-resonance Control	Fn204	Adjust Anti-resonance Control	Cannot be executed.	page 8-51
	Tuning - Custom Tuning - Vibration Suppression	Fn205	Vibration Suppression	Cannot be executed.	page 8-56
	Response Level Setting	Fn200	Tuning-less Level Setting	Cannot be executed.	page 8-12
Diagnostic	Easy FFT	Fn206	Easy FFT	Cannot be executed.	page 8-95
Others	Adjust the Speed and Torque Reference Offset	Fn009	Autotune Analog (Speed/Torque) Reference Offset	Cannot be executed.	page 6-20, page 6-41
		Fn00A	Manually Adjust Speed Reference Offset	Cannot be executed.	page 6-22
		Fn00B	Manually Adjust Torque Reference Offset	Cannot be executed.	page 6-43
	Adjust the Analog Monitor Output	Fn00C	Adjust Analog Monitor Output Offset	Cannot be executed.	page 9-10
		Fn00D	Adjust Analog Monitor Output Gain	Cannot be executed.	
	Adjust the Motor Current Detection Offsets	Fn00E	Autotune Motor Current Detection Signal Offset	Cannot be executed.	page 6-103
		Fn00F	Manually Adjust Motor Current Detection Signal Offset	Cannot be executed.	
	Initialize Vibration Detection Level	Fn01B	Initialize Vibration Detection Level	Cannot be executed.	page 6-99
	Write Prohibited Setting	Fn010	Write Prohibition Setting	Can be executed.	page 5-8

*1. An **Initialize** Button will be displayed in the Parameter Editing Dialog Box.
*2. Cannot be used when connecting a Linear Servomotor.

5.1.5 Initializing Parameter Settings

You can return the parameters to their default settings.

This function will not initialize the settings of the parameters that are adjusted for the Fn009, Fn00A, Fn00B, Fn00C, Fn00D, Fn00E, and Fn00F utility functions.

> **Important**
> To enable the new settings, turn the power supply to the SERVOPACK OFF and ON again after you complete the operation.

Preparations

Always check the following before you initialize the parameter settings.

- The parameters must not be write prohibited.
- The servo must be OFF.

Applicable Tools

The following table lists the tools that you can use to initialize the parameter settings.

Tool	Fn No./Function Name	Reference
Panel Operator	Fn005	*13.4.5 Initialize Parameters (Fn005)* on page 13-16
Digital Operator	Fn005	Σ-7-Series Digital Operator Operating Manual (Manual No.: SIEP S800001 33)
SigmaWin+	***Basic Functions - Edit Parameters***	*Operating Procedure* on page 5-11

Operating Procedure

Use the following procedure to initialize the parameter settings.

1. Click the Servo Drive Button in the workspace of the Main Window of the SigmaWin+.
2. Select **Edit Parameters** in the Menu Dialog Box.
   The Parameter Editing Dialog Box will be displayed.
3. Select any parameter of the axis to initialize.
4. Click the **Initialize** Button in the **Function** Group.

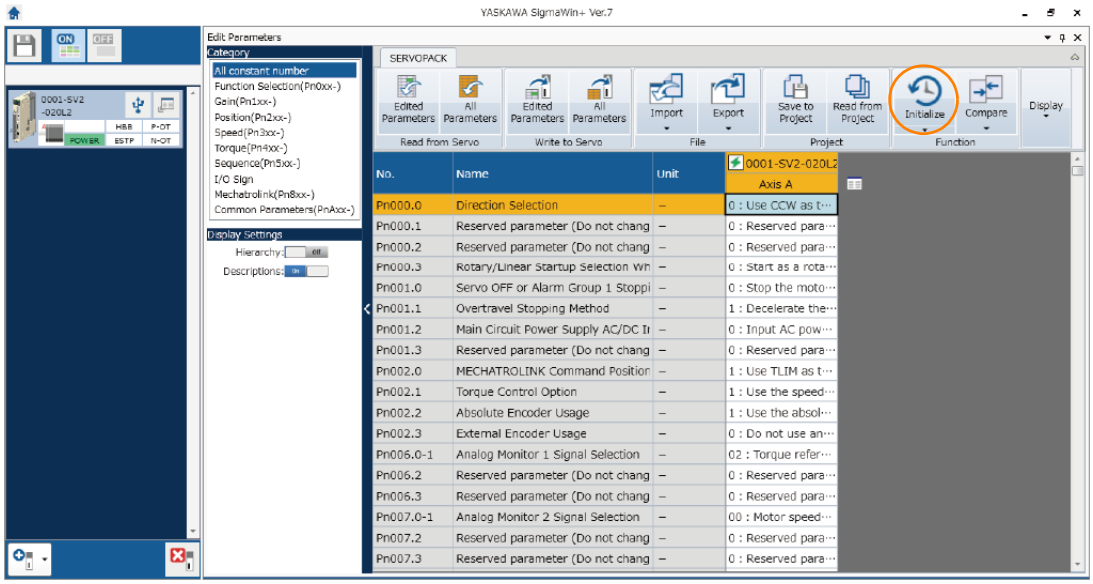

5. Click the **OK** Button.

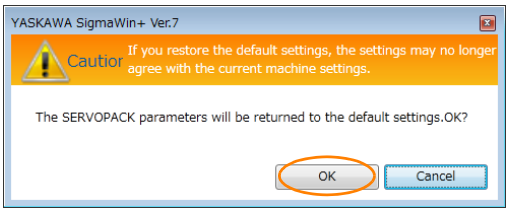

Click the **Cancel** Button to cancel initialization. The Parameter Editing Dialog Box will return.

6. Click the **OK** Button.

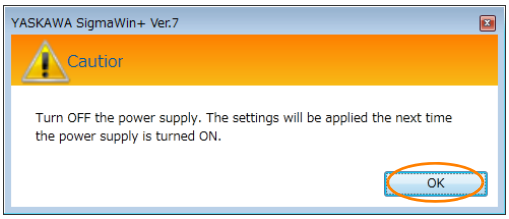

7. Turn the power supply to the SERVOPACK OFF and ON again after the parameter settings have been initialized.

This concludes the procedure to initialize the parameter settings.

5.2 Control Method Selection

You can use the SERVOPACK for speed control, position control, or torque control.
You set the control method in Pn000 = n.□□X□ (Control Method Selection).

Control Method Selection			
Pn000 = n.□□X□	Control Method	Outline	Reference
n.□□0□ (default setting)	Speed control	The speed of the Servomotor is controlled with an analog voltage speed reference. Use speed control in the following cases. • To control speed • For position control using encoder pulse outputs from the SERVOPACK to form a position loop in the host controller	page 6-17
n.□□1□	Position control	The position of the machine is controlled with a pulse train position reference. The position is controlled with the number of input pulses, and the speed is controlled with the input pulse frequency. Use position control when positioning is required.	page 6-30
n.□□2□	Torque control	The torque output by the Servomotor is controlled with an analog voltage torque reference. Use torque control to output the required torque for operations such as pressing.	page 6-40
n.□□3□	Internal set speed control	Three internal set speeds that are preset in the SERVOPACK are used as references to perform speed control. An analog reference is not necessary for this control method.	page 6-55
n.□□4□	Switching between internal set speed control and speed control with analog references	These are switching methods that you can use to change between two of the above four control methods. You can select the combination that is required for the application.	page 6-59
n.□□5□	Switching between internal set speed control and position control		
n.□□6□	Switching between internal set speed control and torque control		
n.□□7□	Switching between position control and speed control		
n.□□8□	Switching between position control and torque control		
n.□□9□	Switching between torque control and speed control		
n.□□A□	Switching between speed control with analog references and speed control with zero clamping	You can use zero clamping for speed control.	page 6-25
n.□□B□	Switching between normal position control and position control with reference pulse inhibition	You can use reference pulse inhibition for position control.	page 6-40

5.3 Power Supply Type Settings for the Main Circuit and Control Circuit

A SERVOPACK with a 200-VAC power supply input can be operated on either an AC power supply input or DC power supply input to the main and control circuits. If you select an AC power supply input, you can operate the SERVOPACK on either a single-phase power supply input or a three-phase power supply input. This section describes the settings related to the power supplies.

Important

You cannot input DC power to a SERVOPACK with a single-phase, 100-VAC power supply input.

5.3.1 AC Power Supply Input/DC Power Supply Input Setting

Set Pn001 = n.□X□□ (Main Circuit Power Supply AC/DC Input Selection) to specify whether to use an AC or DC power supply input for the main circuit power supply to the SERVOPACK.

If the setting of Pn001 = n.□X□□ does not agree with the actual power supply input, an A.330 alarm (Main Circuit Power Supply Wiring Error) will occur.

Example

Examples of When an A.330 Alarm (Main Circuit Power Supply Wiring Error) Occurs
- A DC power supply is connected between the B1/⊕ and ⊖2 terminals, but an AC power supply input is specified (Pn001 = n.□0□□).
- An AC power supply is input to the L1, L2, and L3 terminals, but a DC power supply is specified (Pn001 = n.□1□□).

Parameter		Meaning	When Enabled	Classification
Pn001	n.□0□□ (default setting)	Use an AC power supply input.	After restart	Setup
	n.□1□□	Use a DC power supply input.		

WARNING

- **Connect the AC or DC power supplies to the specified SERVOPACK terminals.**
  - Connect an AC power supply to the L1, L2, and L3 terminals and the L1C and L2C terminals on the SERVOPACK.
  - Connect a DC power supply to the B1/⊕ and ⊖2 terminals and the L1C and L2C terminals on the SERVOPACK.

  There is a risk of failure or fire.
- **Always specify a DC power supply input (Pn001 = n.□1□□) before you input DC power for the main circuit power supply.**
  If you input DC power without specifying a DC power supply input (i.e., without setting Pn001 to n.□1□□), the SERVOPACK's internal elements may burn and may cause fire or damage to the equipment.
- **With a DC power supply input, time is required to discharge electricity after the main power supply is turned OFF. A high residual voltage may remain in the SERVOPACK after the power supply is turned OFF. Be careful not to get an electric shock.**
- **Install fuses on the power supply line if you use DC power.**
- **The Servomotor returns regenerative energy to the power supply. If you use a SERVOPACK with a DC power supply input, regenerative energy is not processed. Process the regenerative energy at the power supply.**
- **If you use a DC power supply input with any of the following SERVOPACKs, externally connect an inrush current limiting circuit and use the power ON and OFF sequences recommended by Yaskawa: SGD7S-330A, -470A, -550A, -590A, or -780A.**
  There is a risk of equipment damage.
  Refer to the following section for the power ON and OFF sequences.
  ☞ *4.3.3 Power ON Sequence* on page 4-15

Refer to the following section for information on wiring the SERVOPACK.
☞ *4.3.4 Power Supply Wiring Diagrams* on page 4-16

5.3.2 Single-phase AC Power Supply Input/Three-phase AC Power Supply Input Setting

Some models of Three-phase 200-VAC SERVOPACKs can also operate on a single-phase 200-VAC power supply.

You can use a single-phase, 200-VAC power supply input with the following models.

- SGD7S-R70A, -R90A, -1R6A, -2R8A, and -5R5A

If you use a single-phase, 200-VAC power supply input for the SERVOPACK's main circuit power supply, set parameter Pn00B to n.□1□□ (Use a three-phase power supply input as a single-phase power supply input).

Information: You do not need to change the setting of Pn00B to n.□1□□ (Use a three-phase power supply input as a single-phase power supply input) for a SERVOPACK with a single-phase 200-VAC power supply input (model numbers: SGD7S-120A□□□008) or for a SERVOPACK with a single-phase 100-VAC power supply input.

Parameter		Meaning	When Enabled	Classification
Pn00B	n.□0□□ (default setting)	Use a three-phase power supply input.	After restart	Setup
	n.□1□□	Use a three-phase power supply input as a single-phase power supply input.		

Important

1. If you use a single-phase power supply input without specifying a single-phase AC power supply (Pn00B = n.□1□□), an A.F10 alarm (Power Supply Line Open Phase) will occur.
2. Not all SERVOPACKs can be run on a single-phase AC power supply input. If you connect a single-phase AC power supply input to a SERVOPACK that does not support single-phase power, an A.F10 alarm (Power Supply Line Open Phase) will occur.
3. If you use a single-phase 200-VAC power supply input, the torque-motor speed characteristic of the Servomotor will not be the same as for a three-phase AC power supply input. Decide whether to use a single-phase or three-phase AC power supply input after checking the characteristics given in the Servomotor manual or catalog.

Refer to the following section for information on wiring a single-phase AC power supply input to the SERVOPACK.

☞ • *Wiring Example for Single-Phase, 200-VAC Power Supply Input* on page 4-17

5.4 Automatic Detection of Connected Motor

You can use a SERVOPACK to operate either a Rotary Servomotor or a Linear Servomotor.

If you connect the Servomotor encoder to the CN2 connector on the SERVOPACK, the SERVOPACK will automatically determine which type of Servomotor is connected. Therefore, you normally do not need to specify the Servomotor type.

Information

If an encoder is not connected, e.g., for a test without a motor, you can specify a Rotary Servomotor or a Linear Servomotor in Pn000 = n.X□□□ (Rotary/Linear Servomotor Startup Selection When Encoder Is Not Connected). If you specify either a Rotary or Linear Servomotor, only the parameters, monitors, alarms, and functions for the specified motor type will be enabled.

Parameter		Meaning	When Enabled	Classification
Pn000	n.0□□□ (default setting)	When an encoder is not connected, start as SERVOPACK for Rotary Servomotor.	After restart	Setup
	n.1□□□	When an encoder is not connected, start as SERVOPACK for Linear Servomotor.		

5.5 Functions and Settings for the /S-ON (Servo ON) Signal

The /S-ON (Servo ON) signal is used to enable Servomotor operation.
This section describes the function of and settings for the /S-ON signal.

5.5.1 Function of the /S-ON (Servo ON) Signal

Type	Signal	Connector Pin No.	Signal Status	Function
Input	/S-ON	CN1-40 (default setting)	ON (closed)	Power is supplied to the Servomotor to enable operation.
			OFF (open)	Power supply to the Servomotor is stopped and operation is disabled.

You can use Pn50A = n.□□X□ (/S-ON (Servo ON) Signal Allocation) to allocate the /S-ON signal to a different input signal terminal. Refer to the following section for details on input signal allocation.

☞ *6.1.1 Input Signal Allocations* on page 6-5

Important

1. Always input the /S-ON signal before you input a speed, position, or torque reference to start the Servomotor. Never input the reference first and then use the /S-ON signal or turn ON the AC power supply to start the Servomotor. Doing so will degrade internal elements and may cause an accident.
2. Input the /S-ON signal while the Servomotor is stopped. You cannot turn ON the servo while the Servomotor is operating.

5.5.2 Setting to Keep the Servo ON and Supply Power to the Motor Continuously

You can set Pn50A = n.□□X□ (/S-ON (Servo ON) Signal Allocation) to 7 (The signal is always active) to keep the servo ON and supply power to the motor continuously.

Parameter		Meaning	When Enabled	Classification
Pn50A	n.□□0□ (default setting)	The S-ON signal is active when CN1-40 input signal is ON (closed).	After restart	Setup
	n.□□7□	The signal is always active. (The /S-ON signal is always active.)		

Important

1. If you set this parameter to keep the servo ON continuously, power will be supplied to the motor as soon the main circuit power supply to the SERVOPACK is turned ON. If there is already a speed, position, or torque reference input, the Servomotor or machine may perform unexpected operation. Always implement safety measures.
2. If a resettable alarm occurs and operation is disabled (power is not supplied to the motor), operation will be automatically enabled (power will be supplied to the motor) when the alarm is reset. If you set this parameter to keep the servo ON continuously, the Servomotor or machine may perform unexpected operation when an alarm is reset.

5.6 Motor Direction Setting

You can reverse the direction of Servomotor rotation by changing the setting of Pn000 = n.□□□X (Rotation Direction Selection) without changing the polarity of the speed or position reference.

This causes the rotation direction of the Servomotor to change, but the polarity of the signals, such as encoder output pulses, output from the SERVOPACK do not change. Set the appropriate direction for your system.

Refer to the following section for details on the encoder divided pulse output.

☞ *6.8 Encoder Divided Pulse Output* on page 6-48

- Rotary Servomotors

The default setting for forward rotation is counterclockwise (CCW) as viewed from the load end of the Servomotor.

Parameter		Forward/Reverse Reference	Motor Direction and Encoder Divided Pulse Outputs	Applicable Overtravel Signal (OT)
Pn000	n.□□□0 Use CCW as the forward direction. (default setting)	Forward reference	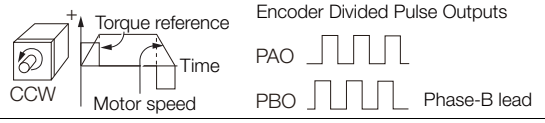	P-OT (Forward Drive Prohibit) signal
		Reverse reference	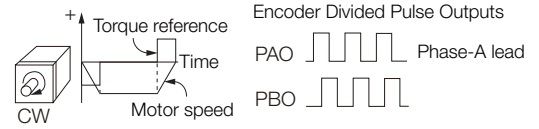	N-OT (Reverse Drive Prohibit) signal
	n.□□□1 Use CW as the forward direction. (Reverse Rotation Mode)	Forward reference	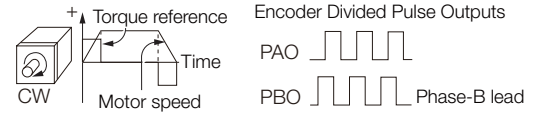	P-OT (Forward Drive Prohibit) signal
		Reverse reference	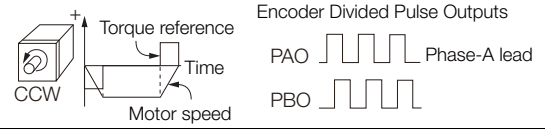	N-OT (Reverse Drive Prohibit) signal

Note: The trace waveforms of the SigmaWin+ are shown in the above table for the torque reference and motor speed diagrams. If you measure them on a measuring instrument, e.g., with an analog monitor, the polarity will be reversed.

- Linear Servomotors

Before you set this parameter, make sure that Pn080 = n.□□X□ (Motor Phase Sequence Selection) is set correctly.

Parameter		Forward/Reverse Reference	Motor Moving Direction and Encoder Divided Pulse Outputs	Applicable Overtravel Signal (OT)
Pn000	n.□□□0 Use the direction in which the linear encoder counts up as the forward direction. (default setting)	Forward reference	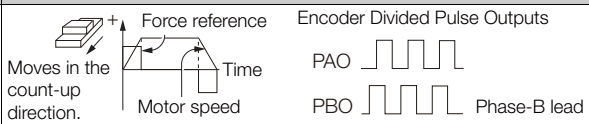	P-OT (Forward Drive Prohibit) signal
		Reverse reference	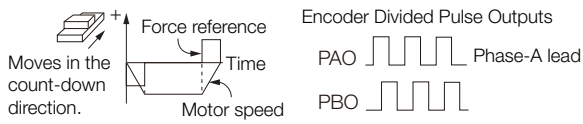	N-OT (Reverse Drive Prohibit) signal
	n.□□□1 Use the direction in which the linear encoder counts down as the forward direction.	Forward reference	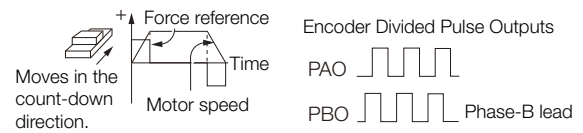	P-OT (Forward Drive Prohibit) signal
		Reverse reference	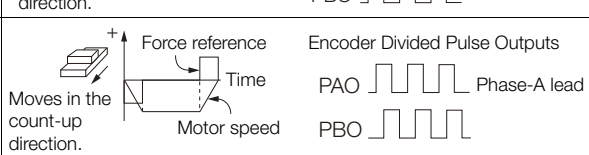	N-OT (Reverse Drive Prohibit) signal

Note: The trace waveforms of the SigmaWin+ are shown in the above table for the force reference and motor speed diagrams. If you measure them on a measuring instrument, e.g., with an analog monitor, the polarity will be reversed.

5.7 Setting the Linear Encoder Pitch

If you connect a linear encoder to the SERVOPACK through a Serial Converter Unit, you must set the scale pitch of the linear encoder in Pn282.

If a Serial Converter Unit is not connected, the setting of the Pn282 is disabled.

Term

Serial Converter Unit
The Serial Converter Unit converts the signal from the linear encoder into a form that can be read by the SERVOPACK.

Scale Pitch
A linear encoder has a scale for measuring lengths (positions). The length of one division on this scale is the scale pitch.

Pn282	Linear Encoder Scale Pitch			Speed / Position / Force	
	Setting Range	Setting Unit	Default Setting	When Enabled	Classification
	0 to 6,553,600	0.01 µm	0	After restart	Setup

You will not be able to control the Linear Servomotor if Pn282 is not set correctly. Check the above table and always set the correct value before you operate the Linear Servomotor.

Type of Linear Encoder	Manufacturer	Model	Serial Converter Unit Model	Linear Encoder Pitch [µm]
Incremental	Dr. JOHANNES HEIDENHAIN GmbH	LIDA48□	JZDP-H003-□□□-E	20
			JZDP-J003-□□□-E	
		LIF48□	JZDP-H003-□□□-E	4
			JZDP-J003-□□□-E	
	Renishaw PLC	RGH22B	JZDP-H005-□□□-E	20
			JZDP-J005-□□□-E	

The first time you supply power to the SERVOPACK, the panel display on the front of the Servomotor will display an A.080 alarm (Linear Encoder Pitch Setting Error). The A.080 alarm is displayed because the setting of Pn282 has not been changed. The A.080 alarm will be cleared when you change the setting of Pn282 and then turn the power supply OFF and ON again.

Information

Linear Encoder Pitch
If you do not use a Serial Converter Unit, the linear encoder pitch is automatically set and the setting of the Pn282 is disabled. Refer to the following section for details.
☞ ■ *Feedback Resolution of Linear Encoder* on page 5-49

5.8 Writing Linear Servomotor Parameters

If you connect a linear encoder to the SERVOPACK without going through a Serial Converter Unit, you must use the SigmaWin+ to write the motor parameters to the linear encoder. The motor parameters contain the information that is required by the SERVOPACK to operate the Linear Servomotor.

⚠ WARNING

- **Check the Servomotor and linear encoder information before you write the motor parameters.**
  If you do not write the correct motor parameters, the Servomotor may run out of control or burning may occur, possibly resulting in equipment damage or fire.

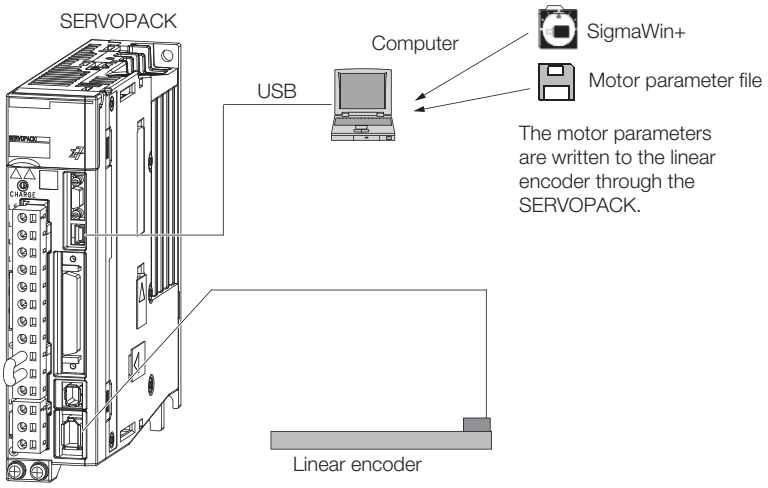

Important

Serial number information is not included in the motor parameters. You cannot use the monitor functions of the SERVOPACK to monitor the serial number.
If you attempt to monitor the serial number, ********** will be displayed.

Precautions

- If the encoder parameters are not written to the linear encoder, an A.CA0 alarm (Encoder Parameter Error) will occur. Consult the manufacturer of the linear encoder.
- If the motor parameters are not written to the linear encoder, an A.CA0 alarm (Encoder Parameter Error) will not occur, but the following alarms will occur.
  A.040 (Parameter Setting Error), A.041 (Encoder Output Pulse Setting Error),
  A.050 (Combination Error), A.051 (Unsupported Device Alarm),
  A.550 (Maximum Speed Setting Error), A.710 (Instantaneous Overload),
  A.720 (Continuous Overload), and A.C90 (Encoder Communications Error)

Applicable Tools

The following table lists the tools that you can use to write the parameters to the Linear Servomotor.

Tool	Fn No./Function Name	Reference
Panel Operator	You cannot write Linear Servomotor parameters from the Panel Operator.	
Digital Operator	You cannot write Linear Servomotor parameters from the Digital Operator.	
SigmaWin+	***Encoder Setting – Motor Parameter Scale Write***	☞ *Operating Procedure* on page 5-21

Operating Procedure

Use the following procedure to write the motor parameters to the Linear Encoder.

1. Prepare the motor parameter file to write to the linear encoder.

2. Click the Servo Drive Button in the workspace of the Main Window of the SigmaWin+.

3. Select **Motor Parameter Scale Write** in the Menu Dialog Box.
   The Motor Parameter Scale Write Dialog Box will be displayed.

4. Click the **OK** Button.

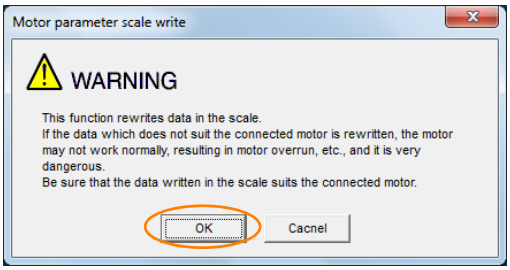

   Click the **Cancel** Button to cancel writing the motor parameters to the linear encoder. The Main Window will return.
   If the write is completed normally, the Motor Parameter Scale Write - File Select Dialog Box will be displayed.

5. Click the **Ref.** Button.

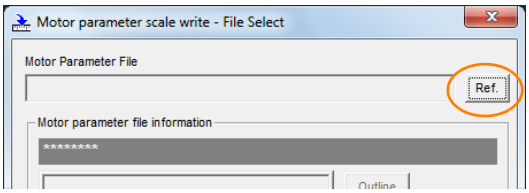

6. Select the motor parameter file that you prepared and click the **Open** Button.

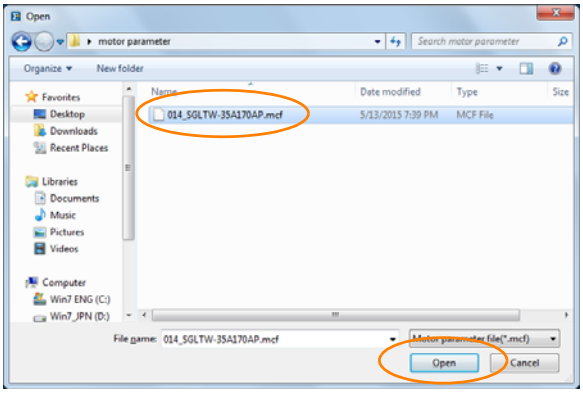

7. Confirm that the motor parameter file information that is displayed is suitable for your Servomotor, and then click the **Next** Button.

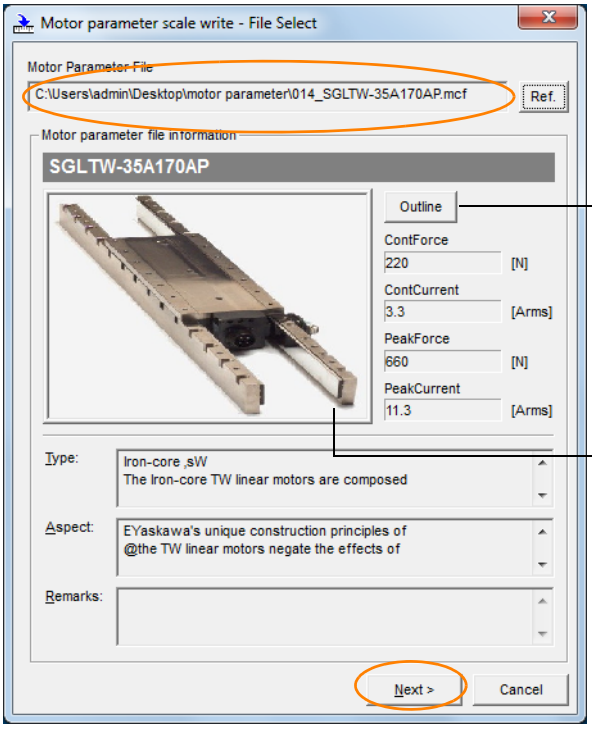

Displays an exterior view of the Servomotor.

Click the image to enlarge it.

Click the **Cancel** Button to cancel writing the motor parameters to the linear encoder. The Main Window will return.

8. Click the **Write** Button.

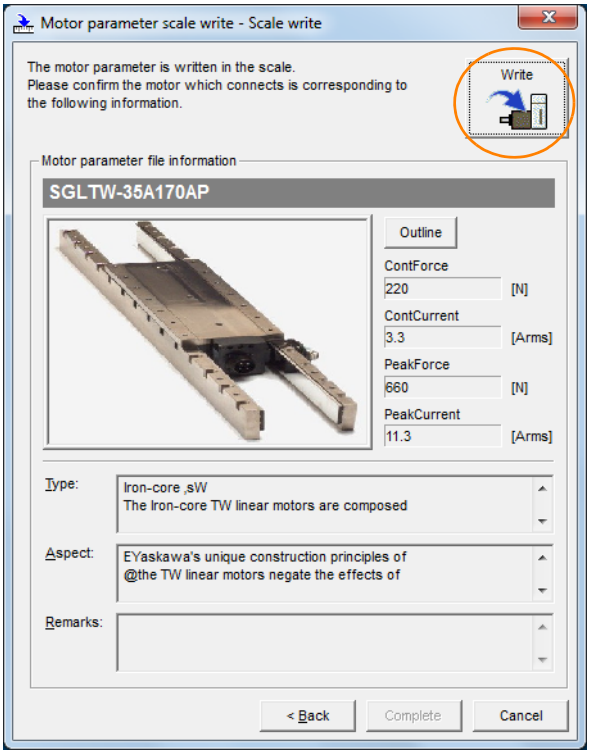

9. Click the **Yes** Button.

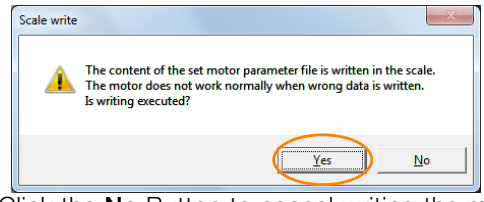

Click the **No** Button to cancel writing the motor parameters to the linear encoder.

If you click the **Yes** Button, writing the motor parameter scale will start.

10. Click the **Complete** Button.

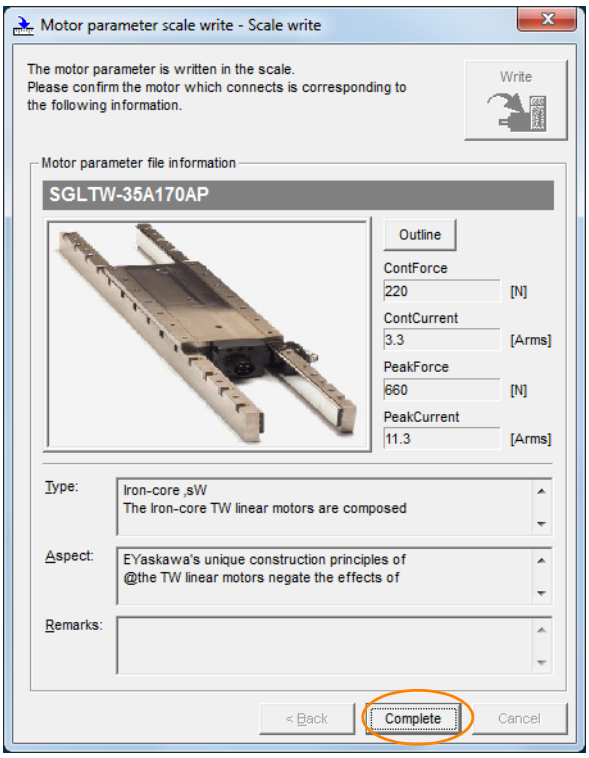

11. Click the **OK** Button.

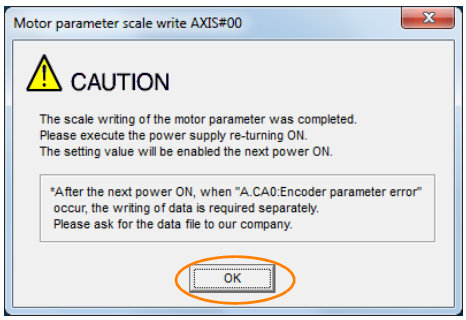

12. Turn the power supply to the SERVOPACK OFF and ON again.

This concludes the procedure to write the motor parameters.

Confirming If the Motor Parameters Have Been Written

After you write the motor parameters, you can use a monitor function to confirm that the motor parameters are in the encoder.

If the motor parameters have not been written, no information on the Servomotor will be displayed.

☞ *9.1 Monitoring Product Information* on page 9-2

5.9 Selecting the Phase Sequence for a Linear Servomotor

You must select the phase sequence of the Linear Servomotor so that the forward direction of the Linear Servomotor is the same as the encoder's count-up direction.

Before you set the Linear Servomotor phase sequence (Pn080 = n.□□X□), check the following items.

- Confirm that the signal from the linear encoder is being received normally.
- Make sure that the forward direction of the Linear Servomotor and the count-up direction of the linear encoder are in the same direction.

Important

If you do not confirm the above items before you attempt to operate the Servomotor, the Servomotor may not operate or it may run out of control. Always confirm these items before you operate the Servomotor.

Related Parameters

Parameter		Meaning	When Enabled	Classification
Pn080	n.□□0□ (default setting)	Set a phase-A lead as a phase sequence of U, V, and W.	After restart	Setup
	n.□□1□	Set a phase-B lead as a phase sequence of U, V, and W.		

Operating Procedure

Use the following procedure to select the phase sequence for a Linear Servomotor.

1. **Set Pn000 to n.□□□0 (Set a phase-A lead as a phase sequence of U, V, and W).**
   This setting is to make following confirmation work easier to understand.

2. **Select Monitor in the Menu Dialog Box.**
   The Operation Pane will be displayed so that you can check the feedback pulse counter.
   To check the feedback pulse counter with the Panel Operator or Digital Operator, use Un00D (Feedback Pulse Counter).

3. **Manually move the Moving Coil from one end to the other of the stroke and confirm that only the correct number of feedback pulses is returned.**
   If the correct number and only the correct number of pulses is returned, the signal is being received correctly from the linear encoder.

   Example

   In this example, assume that a linear encoder with a scale pitch of 20 μm and a resolution of 256 is used. If you manually move the Moving Coil 1 cm in the count-up direction of the linear encoder, the number of feedback pulses would be as follows:
   1 cm/(20 μm/256) = 128,000 pulses

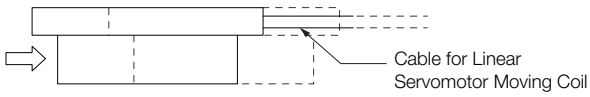

If there are 128,000 pulses on the feedback pulse counter after you manually move the Moving Coil in the direction of the cable, you have completed the confirmation.

Note: The actual monitor display will be offset by the error in the travel distance. There is no problem as long as the above value is close to the calculated value.

Information

If the correct value is not displayed for the feedback pulse counter, the following conditions may exist. Check the situation and correct any problems.

- The linear encoder pitch is not correct.
  If the scale pitch that is set in Pn282 does not agree with the actual scale pitch, the expected number of feedback pulses will not be returned. Check the specifications of the linear encoder.
- The linear encoder is not adjusted properly.
  If the linear encoder is not adjusted properly, the output signal level from the linear encoder will drop and the correct number of pulses will not be counted. Check the adjustment of the linear encoder. Contact the manufacturer of the linear encoder for details.
- There is a mistake in the wiring between the linear encoder and the Serial Converter Unit.
  If the wiring is not correct, the correct number of pulses will not be counted. Correct the wiring.

4. Manually move the Moving Coil in the direction of the cable and check the value of the feedback pulse counter in the Operation Pane to confirm that it is counting up.

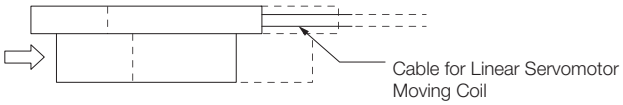

Manually move the Moving Coil in the direction of the cable.

5. If the feedback pulse counter counts up, set a phase-A lead as a phase sequence of U, V, and W (Pn080 = n.□□0□).
   If the feedback pulse counter counts down, set a phase-B lead as a phase sequence of U, V, and W (Pn080 = n.□□1□).
6. Turn the power supply to the SERVOPACK OFF and ON again.
7. If necessary, return Pn000 = n.□□□X (Direction Selection) to its original setting.

This concludes the procedure to set the phase sequence of the Linear Servomotor.

5.10 Polarity Sensor Setting

The polarity sensor detects the polarity of the Servomotor. You must set a parameter to specify whether the Linear Servomotor that is connected to the SERVOPACK has a polarity sensor. Specify whether there is a polarity sensor in Pn080 = n.□□□X (Polarity Sensor Selection).

If the Linear Servomotor has a polarity sensor, set Pn080 to n.□□□0 (Use polarity sensor) (default setting).

If the Linear Servomotor does not have a polarity sensor, set Pn080 to n.□□□1 (Do not use polarity sensor). Turn the power supply OFF and ON again to enable the new setting.

Parameter		Meaning	When Enabled	Classification
Pn080	n.□□□0 (default setting)	Use polarity sensor.	After restart	Setup
	n.□□□1	Do not use polarity sensor.		

Information

If you set Pn080 to n.□□□0 (Use polarity sensor) and the Linear Servomotor that is connected to the SERVOPACK does not have a polarity sensor, an A.C21 alarm (Polarity Sensor Error) will occur when you turn the power supply OFF and ON again.

5.11 Polarity Detection

If you use a Linear Servomotor that does not have a polarity sensor, then you must detect the polarity.

Detecting the polarity means that the position of the electrical angle phase on the electrical angle coordinates of the Servomotor is detected. The SERVOPACK cannot control the Servomotor correctly unless it accurately knows the position of the electrical angle coordinate of the Servomotor.

The execution timing and execution method for polarity detection depend on the encoder specification as described in the following table.

Encoder Specification	Polarity Detection Execution Timing	Polarity Detection Execution Method
Incremental encoder	Each time the control power supply to the SERVOPACK is turned ON (Even after you execute polarity detection, the position of the polarity will be lost the next time the control power supply to the SERVOPACK is turned OFF.)	• Use the /S-ON (Servo ON) signal. • Use the /P-DET (Polarity Detection) signal. • Use the polarity detection function of the SigmaWin+. • Execute the Fn080 (Polarity Detection) utility function from the Digital Operator or Panel Operator.
Absolute encoder	Only for initial setup, or after the SERVOPACK, linear encoder, or Servomotor has been replaced (The results of polarity detection is stored in the absolute encoder, so the polarity position is not lost when the control power supply is turned OFF.)	• Use the polarity detection function of the SigmaWin+. • Execute the Fn080 (Polarity Detection) utility function from the Digital Operator or Panel Operator.

Information If you use a Linear Servomotor that does not have a polarity sensor, you will not be able to turn ON the servo until polarity detection has been completed.

5.11.1 Restrictions

Assumed Conditions

The Servomotor will move when you execute polarity detection. The following conditions must be met before you start.

- It must be OK to move the Moving Coil about 10 mm.
  (If polarity detection fails, the Moving Coil may move approximately 5 cm. The amount of movement depends on conditions.)
- The linear encoder pitch must be 100 μm or less. (We recommend a pitch of 40 μm or less for an incremental encoder.)
- As much as possible, the motor must not be subjected to an imbalanced external force. (We recommend 5% or less of the rated force.)
- The mass ratio must be 50x or less.
- The axis must be horizontal.
- There must be friction equivalent to a few percent of the rated force applied to the guides. (Air sliders cannot be used.)

Preparations

Always check the following before you execute polarity detection.

- Not using a polarity sensor must be specified (Pn080 = n.□□□1).
- The servo must be OFF.
- The main circuit power supply must be ON.
- There must be no hard wire base block (HWBB).
- There must be no alarms except for an A.C22 alarm (Phase Information Disagreement).
- The parameters must not be write prohibited. (This item applies only when using the SigmaWin+ or Digital Operator.)
- The test without a motor function must be disabled (Pn00C = n.□□□0).
- There must be no overtravel.
- If the motor parameters have been written or the origin of the absolute linear encoder has been set, the power supply to the SERVOPACK must be turned OFF and ON again after completion of the writing or setting operation.

Important

1. Power is supplied to the Servomotor during polarity detection. Be careful not to get an electric shock. Also, the Moving Coil of the Linear Servomotor may greatly move during detection. Do not approach the moving parts of the Servomotor.
2. Polarity detection is affected by many factors.
   For example, polarity detection may fail if the mass ratio or friction is too large or the cable tension is too strong.

5.11.2 Using the /S-ON (Servo ON) Signal to Perform Polarity Detection

You can use the /S-ON (Servo ON) signal to perform polarity detection only with an incremental linear encoder.

Polarity detection will be performed when you turn the control power supply to the SERVOPACK OFF and then ON again, and then input the /S-ON signal. As soon as polarity detection is completed, the /S-RDY (Servo Ready) signal will turn ON.

Type	Signal	Connector Pin No.	Signal Status	Meaning
Input	/S-ON	CN1-40 (default setting)	ON (closed)	The servo is turned ON (power is supplied to the motor), polarity detection is performed once, and then the servo is left ON. (The /S-RDY signal will turn ON.)
			OFF (open)	The servo is turned OFF (power is not supplied to the motor) and operation is disabled.

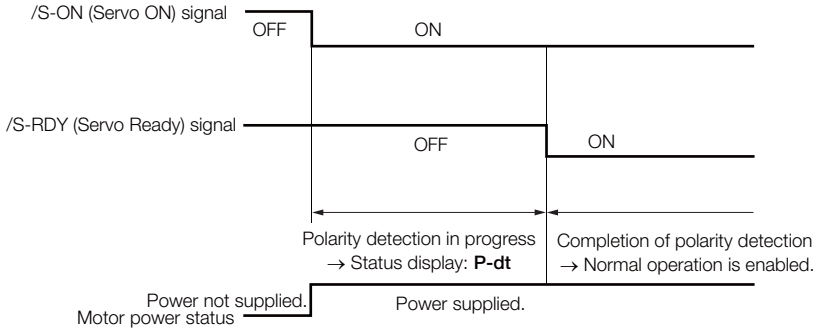

5.11.3 Using the /P-DET (Polarity Detection) Signal to Perform Polarity Detection

You can allocate the /P-DET (Polarity Detection) signal if you want to create a sequence on the host computer to monitor the /S-RDY (Servo Ready) signal and output the /S-ON (Servo ON) signal, or if you want to perform polarity detection at times other than when the /S-ON signal turns ON.

On the falling edge of the /P-DET signal, the servo will turn ON and polarity detection will be performed once. As soon as polarity detection is completed, the servo will turn ON and the /S-RDY (Servo Ready) signal will turn ON. After polarity detection has been completed, it will not be executed again even if you turn ON the /P-DET signal.

Type	Signal	Connector Pin No.	Signal Status	Meaning
Input	/S-ON	CN1-40 (default setting)	ON (closed)	Turns ON the servo (supplies power to the motor) and enables operation.
			OFF (open)	Turns OFF the servo (stops power supply to the motor) and disables operation.
	/P-DET	Must be allocated.	ON (closed)	Executes polarity detection, but only on the first falling edge of the signal after the power supply is turned ON.
			OFF (open)	–

Note: You must allocate the /P-DET signal to use it. Use the following parameters to allocate signals.
- Pn50A = n.□□□1 (Change the sequence input signal allocations.)
- Pn50D = n.X□□□ (/P-DET (Polarity Detection Input) Signal Allocation)

Refer to the following section for details.
☞ *6.1.1 Input Signal Allocations* on page 6-5

Important

When the /P-DET (Polarity Detection) signal is set to be always active, polarity detection will automatically start when the main circuit power supply is turned ON. This can result in unexpected operation of the Servomotor. Always implement safety measures when you preform polarity detection.

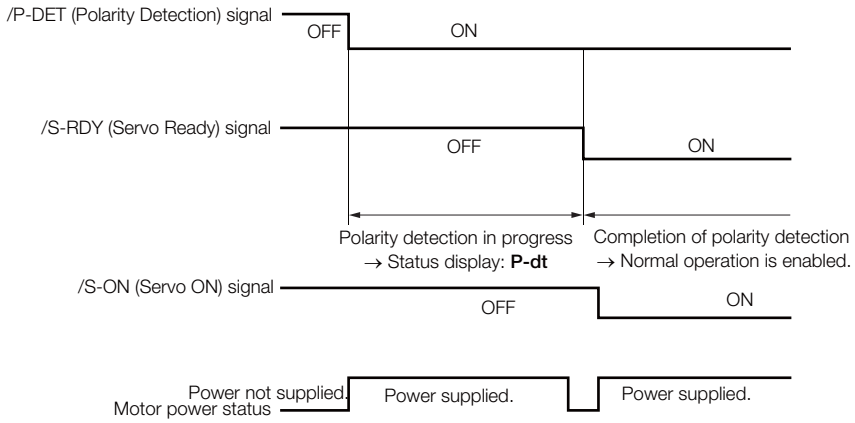

5.11.4 Using a Tool Function to Perform Polarity Detection

Applicable Tools

The following table lists the tools that you can use to perform polarity detection.

Tool	Fn No./Function Name	Reference
Panel Operator	Fn080	*13.4.26 Polarity Detection (Fn080)* on page 13-29
Digital Operator	Fn080	Σ-7-Series Digital Operator Operating Manual (Manual No.: SIEP S800001 33)
SigmaWin+	***Encoder Setting - Polarity Detection***	*Operating Procedure* on page 5-30

Operating Procedure

Use the following procedure to perform polarity detection.

1. Click the Servo Drive Button in the workspace of the Main Window of the SigmaWin+.
2. Select **Polarity Detection** in the Menu Dialog Box.
   The Polarity Detection Dialog Box will be displayed.
3. Click the **Continue** Button.

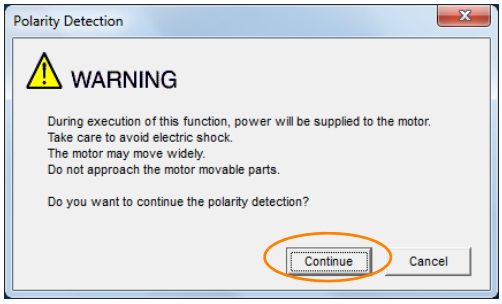

Click the **Cancel** Button to cancel polarity detection. The Main Window will return.

4. Click the **Start** Button.
   Polarity detection will be executed.

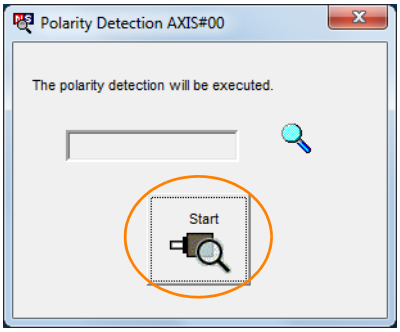

This concludes the polarity detection procedure.

5.12 Overtravel and Related Settings

Overtravel is a function of the SERVOPACK that forces the Servomotor to stop in response to a signal input from a limit switch that is activated when a moving part of the machine exceeds the safe range of movement.

The overtravel signals include the P-OT (Forward Drive Prohibit) and the N-OT (Reverse Drive Prohibit) signals.

You use the P-OT and N-OT signals to stop the machine by installing limit switches at the positions where you want to stop the machine that is operated by the Servomotor.

A SERVOPACK wiring example is provided below.

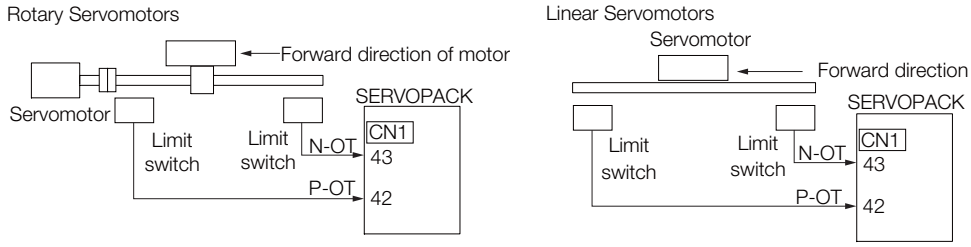

Using the overtravel function is not necessary for rotating applications such as rotary tables and conveyors. No wiring for overtravel input signals is required.

This section describes the parameters settings related to overtravel.

⚠ CAUTION

- To prevent accidents that may result from contact faults or disconnections, use normally closed limit switches.
  Do not change the default settings of the polarity of the overtravel signals (P-OT and N-OT).
- If you use a Servomotor for a vertical axis, the /BK (Brake) signal will remain ON (i.e., the brake will be released) when overtravel occurs. This may result in the workpiece falling when overtravel occurs. To prevent the workpiece from falling, set Pn001 to n.□□1□ to place the Servomotor in a zero-clamped state when it stops.
- A base block state is entered after stopping for overtravel. This may cause the Servomotor to be pushed back by an external force on the load shaft. To prevent the Servomotor from being pushed back, set Pn001 to n.□□1□ to place the Servomotor in a zero-clamped state when it stops.

5.12.1 Overtravel Signals

The overtravel signals include the P-OT (Forward Drive Prohibit) and the N-OT (Reverse Drive Prohibit) signals.

Type	Signal	Connector Pin No.	Signal Status	Meaning
Input	P-OT	CN1-42	ON	Forward drive is enabled (actual operation).
			OFF	Forward drive is prohibited (forward overtravel).
	N-OT	CN1-43	ON	Reverse drive is enabled (actual operation).
			OFF	Reverse drive is prohibited (reverse overtravel).

You can operate the Servomotor in the opposite direction during overtravel by inputting a reference.

Important

When the Servomotor stops due to overtravel during position control, the position deviation is held.
You must input the CLR (Clear) signal to clear the position deviation.
Refer to the following section for information on the CLR signal.
☞ *6.6.2 CLR (Position Deviation Clear) Signal Function and Settings* on page 6-33

5.12.2 Setting to Enable/Disable Overtravel

You can use Pn50A = n.X□□□ (P-OT (Forward Drive Prohibit) Signal Allocation) and Pn50B = n.□□□X (N-OT (Reverse Drive Prohibit) Signal Allocation) to enable and disable the overtravel function.

You do not need to wire the overtravel input signals if you are not going to use the overtravel function.

Parameter		Meaning	When Enabled	Classification
Pn50A	n.2□□□ (default setting)	The forward overtravel function is enabled and the P-OT (Forward Drive Prohibit) signal is input from CN1-42.	After restart	Setup
	n.8□□□	The forward overtravel function is disabled. Forward drive is always enabled.		
Pn50B	n.□□□3 (default setting)	The reverse overtravel function is enabled and the N-OT (Reverse Drive Prohibit) signal is input from CN1-43.		
	n.□□□8	The reverse overtravel function is disabled. Reverse drive is always enabled.		

You can allocate the P-OT and N-OT signals to other connector pins. Refer to the following section for details.
☞ *6.1.1 Input Signal Allocations* on page 6-5

5.12.3 Motor Stopping Method for Overtravel

You can set the stopping method of the Servomotor when overtravel occurs in Pn001 = n.□□XX (Motor Stopping Method for Servo OFF and Group 1 Alarms and Overtravel Stopping Method).

Parameter		Motor Stopping Method*	Status after Stopping	When Enabled	Classification
Pn001	n.□□00 (default setting)	Dynamic brake	Coasting	After restart	Setup
	n.□□01				
	n.□□02	Coasting			
	n.□□1□	Deceleration according to setting of Pn406	Zero clamp		
	n.□□2□		Coasting		
	n.□□3□	Deceleration according to setting of Pn30A	Zero clamp		
	n.□□4□		Coasting		

* You cannot decelerate a Servomotor to a stop during torque control. For torque control, the Servomotor will be stopped with the dynamic braking or coast to a stop (according to the setting of Pn001 = n.□□□X (Motor Stopping Method for Servo OFF and Group 1 Alarms)), and then the Servomotor will enter a coasting state.

Refer to the following section for information on stopping methods other than those for overtravel.

☞ *5.14.1 Stopping Method for Servo OFF* on page 5-42

Stopping the Servomotor by Setting Emergency Stop Torque

To stop the Servomotor by setting emergency stop torque, set Pn406 (Emergency Stop Torque).

If Pn001 = n.□□X□ is set to 1 or 2, the Servomotor will be decelerated to a stop using the torque set in Pn406 as the maximum torque.

The default setting is 800%. This setting is large enough to allow you to operate the Servomotor at the maximum torque. However, the maximum emergency stop torque that you can actually use is the maximum torque of the Servomotor.

Pn406	Emergency Stop Torque			Speed Position	
	Setting Range	Setting Unit	Default Setting	When Enabled	Classification
	0 to 800	1%*	800	Immediately	Setup

* Set a percentage of the motor rated torque.

Stopping the Servomotor by Setting the Deceleration Time

To specify the Servomotor deceleration time and use it to stop the Servomotor, set Pn30A (Deceleration Time for Servo OFF and Forced Stops).

Pn30A	Deceleration Time for Servo OFF and Forced Stops			Speed Position	
	Setting Range	Setting Unit	Default Setting	When Enabled	Classification
	0 to 10,000	1 ms	0	Immediately	Setup

If you set Pn30A to 0, the Servomotor will be stopped with a zero speed.

The deceleration time that you set in Pn30A is the time to decelerate the Servomotor from the maximum motor speed.

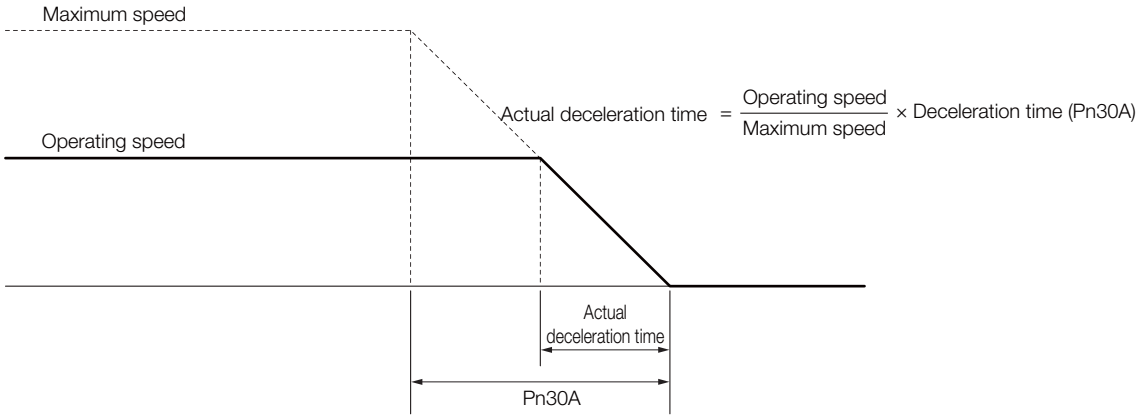

5.12.4 Overtravel Warnings

You can set the system to detect an A.9A0 warning (Overtravel) if overtravel occurs while the servo is ON. This allows the SERVOPACK to notify the host controller with a warning even when the overtravel signal is input only momentarily. An alarm occurs only if overtravel occurs while the servo is ON. An overtravel warning will not be detected when the servo is OFF, even if overtravel occurs.

Important

1. The occurrence of an A.9A0 warning will not stop the motor or have any affect on host controller motion operations. The next step (e.g., the next motion or command) can be executed even if an overtravel warning exists.
   However, depending on the processing specifications and programming for warnings in the host controller, operation may be affected when an overtravel warning occurs (e.g., motion may stop or not stop). Confirm the specifications and programming in the host controller.
2. When overtravel occurs, the SERVOPACK will perform stop processing for overtravel. Therefore, when an A.9A0 warning occurs, the Servomotor may not reach the target position specified by the host controller. Check the feedback position to make sure that the axis is stopped at a safe position.

The following parameter is set for this function.

Parameter		Meaning	When Enabled	Classification
Pn00D	n.0□□□ (default setting)	Do not detect overtravel warnings.	Immediately	Setup
	n.1□□□	Detect overtravel warnings.		

A timing chart for warning detection is provided below.

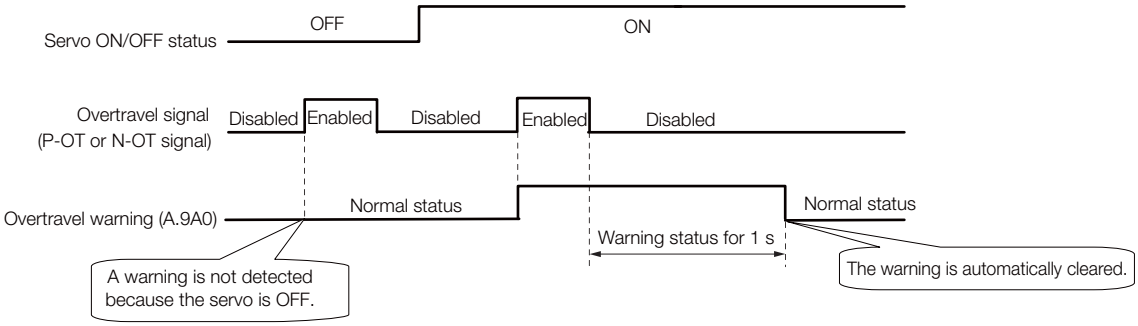

Information

1. Warnings are detected for overtravel in the same direction as the reference.
2. Warnings are not detected for overtravel in the opposite direction from the reference. Example: A warning will not be output for a forward reference even if the N-OT signal turns ON.
3. A warning can be detected in either the forward or reverse direction if there is no reference.
4. A warning will not be detected when the servo is turned ON even if overtravel status exists.
5. The warning status will be held for one second after the overtravel status no longer exists and it will then be cleared automatically.

5.13 Holding Brake

A holding brake is used to hold the position of the moving part of the machine when the SERVOPACK is turned OFF so that moving part does not move due to gravity or an external force. You can use the brake that is built into a Servomotor with a Brake, or you can provide one on the machine.

The holding brake is used in the following cases.

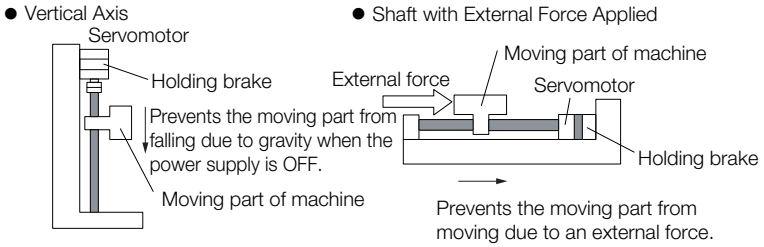

Important

The brake built into a Servomotor with a Brake is a de-energization brake. It is used only to hold the Servomotor and cannot be used for braking. Use the holding brake only to hold a Servomotor that is already stopped.

5.13.1 Brake Operating Sequence

You must consider the brake release delay time and the brake operation delay time to determine the brake operation timing, as described below.

Term

Brake Release Delay Time
The time from when the /BK (Brake) signal is turned ON until the brake is actually released.

Brake Operation Delay Time
The time from when the /BK (Brake) signal is turned OFF until the brake actually operates.

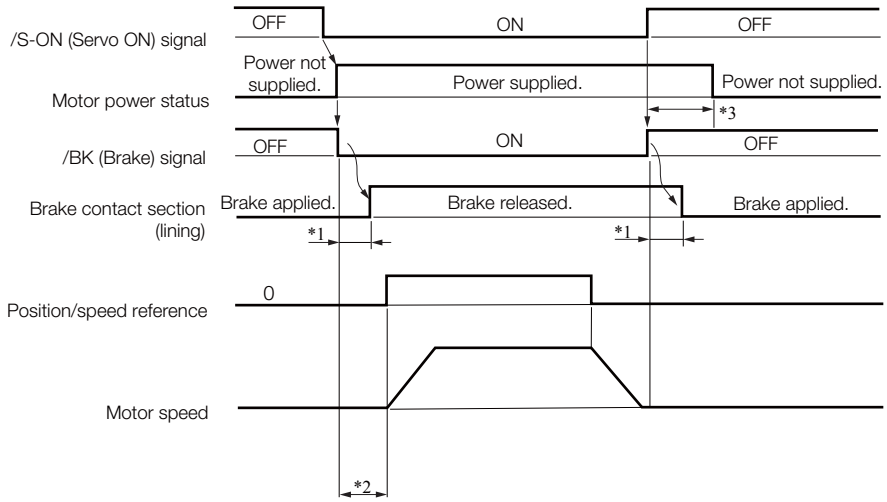

*1. Rotary Servomotors: The brake delay times for Servomotors with Holding Brakes are given in the following table. The operation delay times in the following table are examples for when the power supply is switched on the DC side. You must evaluate the actual brake delay times on the actual equipment before using the application.

Model	Voltage	Brake Release Delay Time [ms]	Brake Operation Delay Time [ms]
SGM7M-A1 to -A3	24 VDC	60	100
SGM7J-A5 to -04			
SGM7J-06 and -08		80	
SGM7A-A5 to -04		60	
SGM7A-06 to -10		80	
SGM7A-15 to -25		170	80
SGM7A-30 to -50		100	
SGM7P-01		20	100
SGM7P-02 and -04		40	
SGM7P-08 and -15		20	
SGM7G-03 to -20		100	80
SGM7G-30 to -44		170	100
SGM7G-55 to -1A			80
SGM7G-1E		250	

Linear Servomotors: The brake delay times depend on the brake that you use. Set the parameters related to /BK signal output timing according to the delay times for the brake that you will actually use.

*2. Before you output a reference from the host controller to the SERVOPACK, wait for at least 50 ms plus the brake release delay time after you turn ON the /S-ON signal.

*3. Use the following parameters to set the timing of when the brake will operate and when the servo will be turned OFF.
- Rotary Servomotors: Pn506 (Brake Reference-Servo OFF Delay Time), Pn507 (Brake Reference Output Speed Level), and Pn508 (Servo OFF-Brake Command Waiting Time)
- Linear Servomotors: Pn506 (Brake Reference-Servo OFF Delay Time), Pn508 (Servo OFF-Brake Command Waiting Time), and Pn583 (Brake Reference Output Speed Level)

Connection Examples

Refer to the following section for information on brake wiring.

☞ *4.4.4 Wiring the SERVOPACK to the Holding Brake* on page 4-34

5.13.2 /BK (Brake) Signal

The following settings are for the output signal that controls the brake. The /BK (Brake) signal is not allocated by default. To use the brake, change the setting of Pn50F = n.□X□□ (/BK (Brake Output) Signal Allocation).
The /BK signal is turned OFF (to operate the brake) when the servo is turned OFF or when an alarm is detected. You can adjust the timing of brake operation (i.e., the timing of turning OFF the /BK signal) with the servo OFF delay time (Pn506).

Type	Signal	Connector Pin No.	Signal Status	Meaning
Output	/BK	Must be allocated.	ON (closed)	Releases the brake.
			OFF (open)	Activates the brake.

Information The /BK signal will remain ON during overtravel. The brake will not be applied.

Allocating the /BK (Brake) Signal

To use the brake, you must allocate an output signal for the /BK signal.
Set the allocation for the /BK signal in Pn50F = n.□X□□ (/BK (Brake Output) Signal Allocation).

Parameter		Connector Pin No.		Meaning	When Enabled	Classification
		+ Pin	- Pin			
Pn50F	n.□0□□ (default setting)	–	–	The /BK signal is not used.	After restart	Setup
	n.□1□□	CN1-25	CN1-26	The /BK signal is output from CN1-25 and CN1-26.		
	n.□2□□	CN1-27	CN1-28	The /BK signal is output from CN1-27 and CN1-28.		
	n.□3□□	CN1-29	CN1-30	The /BK signal is output from CN1-29 and CN1-30.		

Important

1. Signals other than the /BK signal are allocated to the connector pins by default. To allocate connector pins to the /BK signal, you must clear the allocations for the originally allocated signals.
   Example: Allocating the /BK Signal to CN1-25 and CN1-26
   By default, the /COIN (Positioning Completion) signal is allocated to CN1-25 and the /V-CMP (Speed Coincidence Detection) signal is allocated to CN1-26. Therefore, to allocate the connector pins to the /BK signal, you must change the settings of the following two parameters.
   - Pn50F = n.□1□□ (Output the /BK signal from CN1-25 and CN1-26.)
   - Set Pn50E = n.□□XX to a value other than 1. (This clears the allocations of the /COIN and /V-CMP signals to CN1-25 and CN1-26.)
2. If you allocate more than one signal to the same output connector pin, a logical OR of the signals is output. Allocate the /BK signal to its own output connector pin, i.e., do not use the same output terminal for another signal.
   For example, never allocate the /TGON (Rotation Detection) signal and /BK signal to the same output connector pin. If you did so, the /TGON signal would be turned ON by the falling speed on a vertical axis, and the brake would not operate.

5.13.3 Output Timing of /BK (Brake) Signal When the Servomotor Is Stopped

When the Servomotor is stopped, the /BK signal turns OFF at the same time as the /S-ON signal turns OFF. Use the servo OFF delay time (Pn506) to change the timing to turn OFF power supply to the motor after the /S-ON signal turns OFF.

Pn506	Brake Reference-Servo OFF Delay Time			Speed Position Torque	
	Setting Range	Setting Unit	Default Setting	When Enabled	Classification
	0 to 50	10 ms	0	Immediately	Setup

- When the Servomotor is used to control a vertical axis, the machine moving part may move slightly due to gravity or an external force.
  You can eliminate this slight motion by setting the servo OFF delay time (Pn506) so that power supply to the motor is stopped after the brake is applied.
- This parameter sets the timing of stopping power supply to the Servomotor while the Servomotor is stopped.

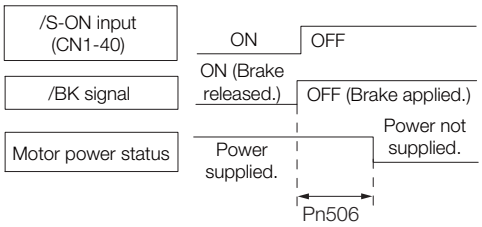

> **Important**
> Power supply to the Servomotor will be stopped immediately when an alarm occurs, regardless of the setting of this parameter. The machine moving part may move due to gravity or an external force before the brake is applied.

5.13.4 Output Timing of /BK (Brake) Signal When the Servomotor Is Operating

If an alarm occurs while the Servomotor is operating, the Servomotor will start stopping and the /BK signal will be turned OFF. You can adjust the timing of /BK signal output by setting the brake reference output speed level (Rotary Servomotors: Pn507, Linear Servomotors: Pn583) and the Servo OFF-Brake Command Waiting Time (Pn508).

Note: If zero-speed stopping is set as the stopping method for alarms, the setting of Pn506 (Brake Reference-Servo OFF Delay Time) is used after the motor stops.

- Rotary Servomotors

Pn507	Brake Reference Output Speed Level			Speed Position Torque	
	Setting Range	Setting Unit	Default Setting	When Enabled	Classification
	0 to 10,000	1 min^{-1}	100	Immediately	Setup
Pn508	Servo OFF-Brake Command Waiting Time			Speed Position Torque	
	Setting Range	Setting Unit	Default Setting	When Enabled	Classification
	10 to 100	10 ms	50	Immediately	Setup

- Linear Servomotors

Pn583	Brake Reference Output Speed Level			Speed Position Force	
	Setting Range	Setting Unit	Default Setting	When Enabled	Classification
	0 to 10,000	1 mm/s	10	Immediately	Setup
Pn508	Servo OFF-Brake Command Waiting Time			Speed Position Force	
	Setting Range	Setting Unit	Default Setting	When Enabled	Classification
	10 to 100	10 ms	50	Immediately	Setup

The brake operates when either of the following conditions is satisfied:

- When the Motor Speed Goes below the Level Set in Pn507 for a Rotary Servomotor or in Pn583 for a Linear Servomotor after the Power Supply to the Motor Is Stopped

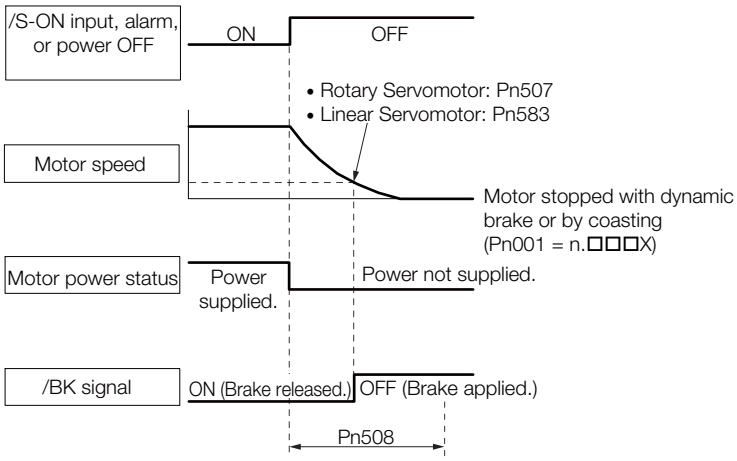

- When the Time Set In Pn508 Elapses after the Power Supply to the Motor Is Stopped

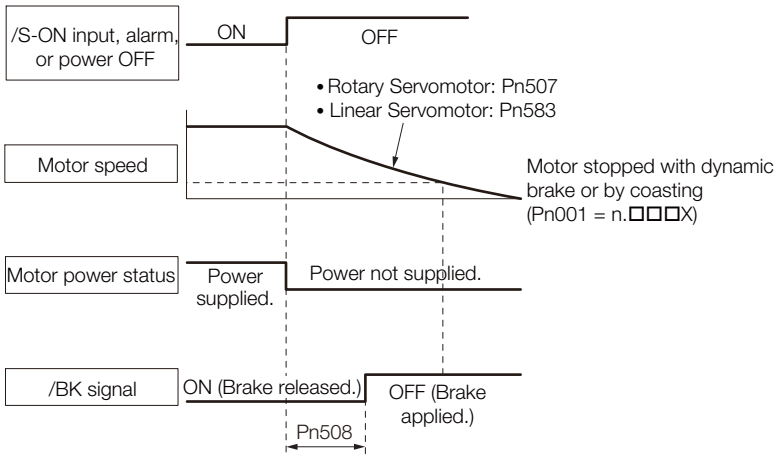

Important

The Servomotor will be limited to its maximum speed even if the brake reference output speed level (Rotary Servomotor: Pn507, Linear Servomotor: Pn583) is higher than the maximum speed.

5.14 Motor Stopping Methods for Servo OFF and Alarms

You can use the following methods to stop the Servomotor when the servo is turned OFF or an alarm occurs.

There are the following four stopping methods.

Motor Stopping Method	Meaning
Stopping by Applying the Dynamic Brake	The electric circuits are internally connected to stop the Servomotor quickly.
Coasting to a Stop	The motor stops naturally due to friction during operation.
Zero-speed Stopping	The speed reference is set to 0 to stop the Servomotor quickly.
Decelerating to a Stop	Emergency stop torque is used to decelerate the motor to a stop.

There are the following three conditions after stopping.

Status after Stopping	Meaning
Dynamic Brake Applied	The electric circuits are internally connected to hold the Servomotor.
Coasting	The SERVOPACK does not control the Servomotor. (The machine will move in response to a force from the load.)
Zero Clamping	A position loop is created and the Servomotor remains stopped at a position reference of 0. (The current stop position is held.)

Important

- The dynamic brake is used for emergency stops. The dynamic brake circuit will operate frequently if the power supply is turned ON and OFF or the servo is turned ON and OFF while a reference input is applied to start and stop the Servomotor. This may result in deterioration of the internal elements in the SERVOPACK. Use speed input references or position references to start and stop the Servomotor.
- If you turn OFF the main circuit power supply or control power supply during operation before you turn OFF the servo, the Servomotor stopping method depends on the SERVOPACK model as shown in the following table.

Condition	Servomotor Stopping Method	
	SGD7S-R70A, -1R6A, -2R8A, -3R8A, -5R5A, -7R6A, -120A, -180A, -200A, -R70F, -R90F, -2R1F, or -2R8F	SGD7S-330A, -470A, -550A, -590A, or -780A
Main circuit power supply turned OFF before turning OFF the servo	Stopping with dynamic brake	
Control power supply turned OFF before turning OFF the servo	Stopping with dynamic brake	Coasting to a stop

- If the Servomotor must be stopped by coasting rather than with the dynamic brake when the main circuit power supply or the control power supply is turned OFF before the servo is turned OFF, use a SERVOPACK with the dynamic brake option.
- To minimize the coasting distance of the Servomotor to come to a stop when an alarm occurs, zero-speed stopping is the default method for alarms to which it is applicable. However, depending on the application, stopping with the dynamic brake may be more suitable than zero-speed stopping.
  For example, when coupling two shafts (twin-drive operation), machine damage may occur if a zero-speed stopping alarm occurs for one of the coupled shafts and the other shaft stops with a dynamic brake. In such cases, change the stopping method to the dynamic brake.

5.14.1 Stopping Method for Servo OFF

Set the stopping method for when the servo is turned OFF in Pn001 = n.□□□X (Motor Stopping Method for Servo OFF and Group 1 Alarms).

Parameter		Servomotor Stopping Method	Status after Servomotor Stops	When Enabled	Classification
Pn001	n.□□□0 (default setting)	Dynamic brake*	Dynamic brake*	After restart	Setup
	n.□□□1		Coasting		
	n.□□□2	Coasting	Coasting		

* The Servomotor will coast to a stop when the SERVOPACK is not equipped with a built-in Dynamic Brake Resistor or an External Dynamic Brake Resistor is not connected.

Note: If Pn001 is set to n.□□□0 (Stop the motor by applying the dynamic brake) and the Servomotor is stopped or operates at a low speed, braking force may not be generated, just like it is not generated for coasting to a stop.

5.14.2 Servomotor Stopping Method for Alarms

There are two types of alarms, group 1 (Gr. 1) alarms and group 2 (Gr. 2) alarms. A different parameter is used to set the stopping method for alarms for each alarm type.

Refer to the following section to see which alarms are in group 1 and which are in group 2.

☞ *12.2.1 List of Alarms* on page 12-5

Motor Stopping Method for Group 1 Alarms

When a group 1 alarm occurs, the Servomotor will stop according to the setting of Pn001 = n.□□□X. The default setting is to stop by applying the dynamic brake.

Refer to the following section for details.

☞ *5.14.1 Stopping Method for Servo OFF* on page 5-42

Motor Stopping Method for Group 2 Alarms

When a group 2 alarm occurs, the Servomotor will stop according to the settings of the following three parameters. The default setting is for zero clamping.

- Pn001 = n.□□□X (Motor Stopping Method for Servo OFF and Group 1 Alarms)
- Pn00A = n.□□□X (Motor Stopping Method for Group 2 Alarms)
- Pn00B = n.□□X□ (Motor Stopping Method for Group 2 Alarms)

However, during torque control, the group 1 stopping method is always used.
If you set Pn00B to n.□□1□ (Apply dynamic brake or coast Servomotor to a stop), you can use the same stopping method as group 1. If you are coordinating a number of Servomotors, you can use this stopping method to prevent machine damage that may result because of differences in the stopping method.

The following table shows the combinations of the parameter settings and the resulting stopping methods.

Parameter			Servomotor Stopping Method	Status after Servomotor Stops	When Enabled	Classification
Pn00B	Pn00A	Pn001				
n.□□0□ (default setting)	–	n.□□□0 (default setting)	Zero-speed stopping	Dynamic brake	After restart	Setup
		n.□□□1		Coasting		
		n.□□□2				
n.□□1□	–	n.□□□0 (default setting)	Dynamic brake	Dynamic brake		
		n.□□□1		Coasting		
		n.□□□2	Coasting			
n.□□2□	n.□□□0	n.□□□0 (default setting)	Dynamic brake	Dynamic brake		
		n.□□□1		Coasting		
		n.□□□2	Coasting			
	n.□□□1 (default setting)	n.□□□0 (default setting)	Motor is decelerated using the torque set in Pn406 as the maximum torque.	Dynamic brake		
		n.□□□1		Coasting		
		n.□□□2				
	n.□□□2	n.□□□0 (default setting)		Coasting		
		n.□□□1				
		n.□□□2				
	n.□□□3	n.□□□0 (default setting)	Motor is decelerated according to setting of Pn30A.	Dynamic brake		
		n.□□□1		Coasting		
		n.□□□2				
	n.□□□4	n.□□□0 (default setting)		Coasting		
		n.□□□1				
		n.□□□2				

Note: 1. The setting of Pn00A is ignored if Pn00B is set to n.□□0□ or n.□□1□.
2. The setting of Pn00A = n.□□□X is enabled for position control and speed control. During torque control, the setting of Pn00A = n.□□□X will be ignored and only the setting of Pn001 = n.□□□X will be used.
3. Refer to the following section for details on Pn406 (Emergency Stop Torque).
☞ *Stopping the Servomotor by Setting Emergency Stop Torque* on page 5-33
4. Refer to the following section for details on Pn30A (Deceleration Time for Servo OFF and Forced Stops).
☞ *Stopping the Servomotor by Setting the Deceleration Time* on page 5-34

5.15 Motor Overload Detection Level

The motor overload detection level is the threshold used to detect overload alarms and overload warnings when the Servomotor is subjected to a continuous load that exceeds the Servomotor ratings.

It is designed to prevent Servomotor overheating.

You can change the detection timing for A.910 warnings (Overload) and A.720 alarms (Continuous Overload). You cannot change the detection level for A.710 alarms (Instantaneous Overload).

5.15.1 Detection Timing for Overload Warnings (A.910)

With the default setting for overload warnings, an overload warning is detected in 20% of the time required to detect an overload alarm. You can change the time required to detect an overload warning by changing the setting of the overload warning level (Pn52B). You can increase safety by using overload warning detection as an overload protection function matched to the system.
The following graph shows an example of the detection of overload warnings when the overload warning level (Pn52B) is changed from 20% to 50%. An overload warning is detected in half of the time required to detect an overload alarm.

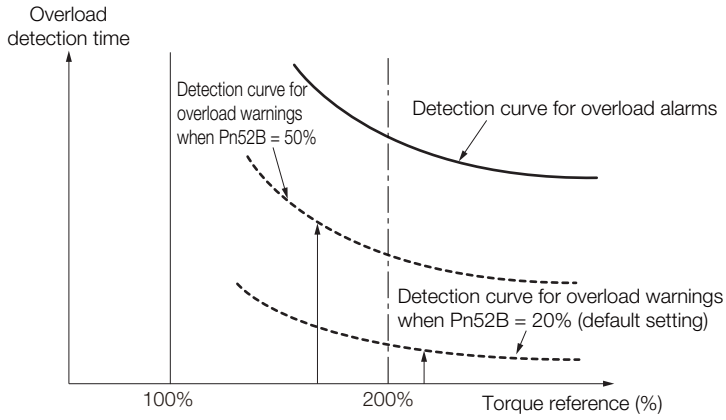

Pn52B	Overload Warning Level			Speed Position Torque	
	Setting Range	Setting Unit	Default Setting	When Enabled	Classification
	1 to 100	1%	20	Immediately	Setup

5.15.2 Detection Timing for Overload Alarms (A.720)

If Servomotor heat dissipation is insufficient (e.g., if the heat sink is too small), you can lower the overload alarm detection level to help prevent overheating.

To reduce the overload alarm detection level, change the setting of Pn52C (Base Current Derating at Motor Overload Detection).

Pn52C	Base Current Derating at Motor Overload Detection			Speed Position Torque	
	Setting Range	Setting Unit	Default Setting	When Enabled	Classification
	10 to 100	1%	100	After restart	Setup

An A.720 alarm (Continuous Overload) can be detected earlier to protect the Servomotor from overloading.

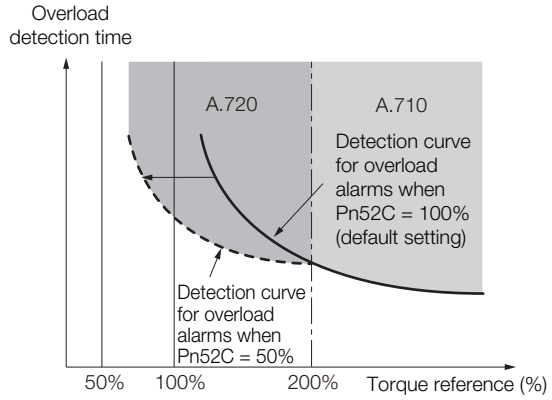

Note: The gray areas in the above graph show where A.710 and A.720 alarms occur.

Refer to the relevant manual given below for a diagram that shows the relationships between the Servomotor heat dissipation conditions (heat sink size, surrounding air temperature, and derating). You can protect the Servomotor from overloads more effectively by setting this derating value in Pn52C.

- Σ-7-Series Rotary Servomotor Product Manual (Manual No.: SIEP S800001 36)
- Σ-7-Series Linear Servomotor Product Manual (Manual No.: SIEP S800001 37)
- Σ-7-Series Direct Drive Servomotor Product Manual (Manual No.: SIEP S800001 38)

5.16 Electronic Gear Settings

The minimum unit of the position data that is used to move a load is called the reference unit. The reference unit is used to give travel amounts, not in pulses, but rather in distances or other physical units (such as μm or °) that are easier to understand.

The electronic gear is used to convert the travel distances that are specified in reference units to pulses, which are required for actual movements.

With the electronic gear, one reference unit is equal to the workpiece travel distance per reference pulse input to the SERVOPACK. In other words, if you use the SERVOPACK's electronic gear, pulses can be read as reference units.

Note: 1. If you set an electronic gear in the host controller, normally set the electronic gear ratio in the SERVOPACK to 1:1.
2. If you enable reference pulse input multiplication switching, the reference unit is defined as the position data that is n times the reference pulses input from the host controller. ("n" is the reference pulse input multiplier.)

The difference between using and not using the electronic gear is shown below.

- Rotary Servomotors

In this example, the following machine configuration is used to move the workpiece 10 mm.

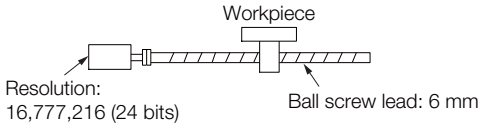

When the Electronic Gear Is Not Used

To move a workpiece 10 mm:
①Calculate the number of revolutions.
The Servomotor will move 6 mm for each revolution, so 10/6 revolutions are required to move 10 mm.
②Calculate the required number of reference pulses.
One revolution is 16,777,216 pulses, therefore 10/6 × 16,777,216 = 27,962,026.66 pulses.
③Input 27,962,027 pulses as the reference.

Calculating the number of reference pulses for each reference is troublesome.

When the Electronic Gear Is Used

If you use reference units to move the workpiece when one reference unit is set to 1 μm, the travel distance is 1 μm per pulse.
To move the workpiece 10 mm (10,000 μm), 10,000 ÷ 1 = 10,000 pulses, so 10,000 pulses would be input.

Calculating the number of reference pulses for each reference is not necessary.

- Linear Servomotors

In this example, the following machine configuration is used to move the load 10 mm. We'll assume that the resolution of the Serial Converter Unit is 256 and that the linear encoder pitch is 20 μm.

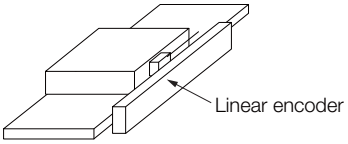

When the Electronic Gear Is Not Used

To move the load 10 mm:
10 × 1000 ÷ 20 × 256 = 128,000 pulses, so 128,000 pulses are input as the reference.

Calculating the number of reference pulses for each reference is troublesome.

When the Electronic Gear Is Used

To use reference units to move the load 10 mm: If we set the reference unit to 1 μm, the travel distance is 1 μm per pulse. To move the load 10 mm (10,000 μm), 10,000/1 = 10,000 pulses, so 10,000 pulses would be input as the reference.

Calculating the number of reference pulses for each reference is not necessary.

5.16.1 Electronic Gear Ratio Settings

Set the electronic gear ratio using Pn20E and Pn210.

Important

The setting range of the electronic gear depends on the setting of Pn040 = n.□□X□ (Encoder Resolution Compatibility Selection).

- Pn040 = n.□□0□ (Use the encoder resolution of the Servomotor.)
  Set the electronic gear ratio within the following range.
  0.001 ≤ Electronic gear ratio (B/A) ≤ 64,000
  If the electronic gear ratio is outside of this range, an A.040 alarm (Parameter Setting Error) will occur.
- Pn040 = n.□□1□ (Use a resolution of 20 bits when connected to an SGM7J, SGM7A, SGM7P, SGM7G, SGM7E, or SGM7F Servomotor.)
  Set the electronic gear ratio within the following range.
  0.001 ≤ Electronic gear ratio (B/A) ≤ 4,000
  If the electronic gear ratio is outside of this range, an A.040 alarm (Parameter Setting Error) will occur.

Pn20E	Electronic Gear Ratio (Numerator)			Position	
	Setting Range	Setting Unit	Default Setting	When Enabled	Classification
	1 to 1,073,741,824	1	64	After restart	Setup
Pn210	Electronic Gear Ratio (Denominator)			Position	
	Setting Range	Setting Unit	Default Setting	When Enabled	Classification
	1 to 1,073,741,824	1	1	After restart	Setup

Calculating the Settings for the Electronic Gear Ratio

◆ Rotary Servomotors

If the gear ratio between the Servomotor shaft and the load is given as n/m, where n is the number of load rotations for m Servomotor shaft rotations, the settings for the electronic gear ratio can be calculated as follows:

$$\text{Electronic gear ratio } \frac{B}{A} = \frac{Pn20E}{Pn210} = \frac{\text{Encoder resolution}}{\text{Travel distance per load shaft revolution (reference units)}} \times \frac{m}{n}$$

■ Encoder Resolution

You can check the encoder resolution in the Servomotor model number.

SGM7M -□□□□□□□

Code	Specification	Encoder Resolution
3	20-bit multiturn absolute encoder	1,048,576

SGM7J, SGM7A,
SGM7P, SGM7G -□□□□□□□

Code	Specification	Encoder Resolution
6	24-bit batteryless multiturn absolute encoder	16,777,216
7	24-bit multiturn absolute encoder	16,777,216
F	24-bit incremental encoder	16,777,216

SGM7E, SGM7F -□□□□□□□

Code	Specification	Encoder Resolution
7	24-bit multiturn absolute encoder	16,777,216
F	24-bit incremental encoder	16,777,216

SGMCS -□□□□□□□

Code	Specification	Encoder Resolution
3	20-bit single-turn absolute encoder	1,048,576
D	20-bit incremental encoder	1,048,576

SGMCV -□□□□□□□

Code	Specification	Encoder Resolution
E	22-bit single-turn absolute encoder	4,194,304
I	22-bit multiturn absolute encoder	4,194,304

◆ Linear Servomotors

You can calculate the settings for the electronic gear ratio with the following equation:

When Not Using a Serial Converter Unit

Use the following formula if the linear encoder and SERVOPACK are connected directly or if a linear encoder that does not require a Serial Converter Unit is used.

$$\text{Electronic gear ratio } \frac{B}{A} = \frac{Pn20E}{Pn210} = \frac{\text{Travel distance per reference unit (reference units)} \times \text{Linear encoder resolution}}{\text{Linear encoder pitch (the value from the following table)}}$$

When Using a Serial Converter Unit

$$\text{Electronic gear ratio } \frac{B}{A} = \frac{Pn20E}{Pn210} = \frac{\text{Travel distance per reference unit (reference units)} \times \text{Resolution of the Serial Converter Unit}}{\text{Linear encoder pitch (setting of Pn282)}}$$

■ Feedback Resolution of Linear Encoder

The linear encoder pitches and resolutions are given in the following table.
Calculate the electronic gear ratio using the values in the following table.

Type of Linear Encoder	Manufacturer	Linear Encoder Model	Linear Encoder Pitch [μm][*1]	Relay Device Model between SERVOPACK and Linear Encoder	Resolution	Resolution
Incre-mental	Dr. JOHANNES HEIDENHAIN GmbH	LIDA48□	20	JZDP-H003-□□□-E[*2]	256	0.078 μm
				JZDP-J003-□□□-E[*2]	4,096	0.0049 μm
		LIF48□	4	JZDP-H003-□□□-E[*2]	256	0.016 μm
				JZDP-J003-□□□-E[*2]	4,096	0.00098 μm
	Renishaw PLC	RGH22B	20	JZDP-H005-□□□-E[*2]	256	0.078 μm
				JZDP-J005-□□□-E[*2]	4,096	0.0049 μm
	Magnescale Co., Ltd.	SR75-□□□□□LF[*3]	80	–	8,192	0.0098 μm
		SR75-□□□□□MF	80	–	1,024	0.078 μm
		SR85-□□□□□LF[*3]	80	–	8,192	0.0098 μm
		SR85-□□□□□MF	80	–	1,024	0.078 μm
		SL700[*3], SL710[*3], SL720[*3], SL730[*3]	800	PL101-RY[*4]	8,192	0.0977 μm
				MJ620-T13[*5]		
		SQ10	400	MQ10-FLA[*5]	8,192	0.0488 μm
				MQ10-GLA[*5]		
	Canon Precision Inc.	PH03-36110	128	–	2,048	0.0625 μm
		PH03-36120	128	–	2,048	0.0625 μm
Absolute	Dr. JOHANNES HEIDENHAIN GmbH	LIC4100 Series[*6]	20.48	EIB3391Y[*7]	4,096	0.005 μm
		LIC2100 Series[*6]	204.8	EIB3391Y[*7]	4,096	0.05 μm
			409.6	EIB3391Y[*7]	4,096	0.1 μm
		LIC4190 Series	40.96	–	4,096	0.01 μm
			20.48	–	4,096	0.005 μm
			4.096	–	4,096	0.001 μm
		LIC3190 Series	40.96	–	4,096	0.01 μm
		LIC2190 Series	409.6	–	4,096	0.1 μm
			204.8	–	4,096	0.05 μm
		LC115	40.96	EIB3391Y[*7]	4,096	0.01 μm
		LC415	40.96	EIB3391Y[*7]	4,096	0.01 μm
	RSF Elektronik GmbH	MC15Y Series	409.6	–	4,096	0.1 μm
			204.8	–	4,096	0.05 μm
	Mitutoyo Corporation	ST781A/ST781AL	256	–	512	0.5 μm
		ST782A/ST782AL	256	–	512	0.5 μm
		ST783/ST783AL	51.2	–	512	0.1 μm
		ST784/ST784AL	51.2	–	512	0.1 μm
		ST788A/ST788AL	51.2	–	512	0.1 μm
		ST789A/ST789AL	25.6	–	512	0.05 μm
		ST1381	5.12	–	512	0.01 μm
		ST1382	0.512	–	512	0.001 μm
	Renishaw PLC	EL36Y□□050F□□□	12.8	–	256	0.05 μm
		EL36Y□□100F□□□	25.6	–	256	0.1 μm
		EL36Y□□500F□□□	128	–	256	0.5 μm
		RL36Y□□050□□□□	12.8	–	256	0.05 μm
		RL36Y□□001□□□□	0.256	–	256	0.001 μm

Continued on next page.

Continued from previous page.

Type of Linear Encoder	Manufacturer	Linear Encoder Model	Linear Encoder Pitch [μm]*1	Relay Device Model between SERVOPACK and Linear Encoder	Resolution	Resolution
Absolute	RLS d.o.o.	LA11YA Series	2,000	–	2,048	0.9765 μm
			2,000	–	4,096	0.4882 μm
			2,000	–	8,192	0.2441 μm
	Magnescale Co., Ltd.	SR77-□□□□□LF*3	80	–	8,192	0.0098 μm
		SR77-□□□□□MF	80	–	1,024	0.078 μm
		SR87-□□□□□LF*3	80	–	8,192	0.0098 μm
		SR87-□□□□□MF	80	–	1,024	0.078 μm
		SQ47/SQ57-□□□□□SF□□□ SQ47/SQ57-□□□□□TF□□□	20.48	–	4,096	0.005 μm
		SQ47/SQ57-□□□□□AF□□□ SQ47/SQ57-□□□□□FF□□□	40.96	–	4,096	0.01 μm
	Fagor Automation S. Coop.	L2AK208	20	–	256	0.078 μm
		L2AK211	20	–	2,048	0.0098 μm
		LAK209	40	–	512	0.078 μm
		LAK212	40	–	4,096	0.0098 μm
		S2AK208	20	–	256	0.078 μm
		SV2AK208	20	–	256	0.078 μm
		G2AK208	20	–	256	0.078 μm
		S2AK211	20	–	2,048	0.0098 μm
		SV2AK211	20	–	2,048	0.0098 μm
		G2AK211	20	–	2,048	0.0098 μm
	Canon Precision Inc.	PH03-36E00	128	–	2,048	0.0625 μm

*1. These are reference values for setting SERVOPACK parameters. Contact the manufacturer for actual linear encoder scale pitches.
*2. This is the model of the Serial Converter Unit.
*3. If you use an encoder pulse output with this linear encoder, the setting range of the encoder output resolution (Pn281) is restricted. Refer to the following section for details on the encoder output resolution (Pn281).
☞ *6.8.2 Setting for the Encoder Divided Pulse Output* on page 6-53
*4. This is the model of the Head with Interpolator.
*5. This is the model of the Interpolator.
*6. Sales of the interface unit EIB3391Y with the LIC4100 and LIC2100 series have ended due to the release of the LIC4190, LIC3190, and LIC2190 series.
*7. This is the model of the Interface Unit.

Information

Resolution

You can calculate the resolution that is used inside the SERVOPACK (i.e., the travel distance per feedback pulse) with the following formula.

$$\text{Resolution (travel distance per feedback pulse)} = \frac{\text{Linear encoder pitch}}{\text{Resolution of Serial Converter Unit or linear encoder}}$$

The SERVOPACK uses feedback pulses as the unit to control a Servomotor.

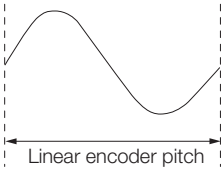

Linear encoder pitch
=Distance for one cycle of the analog voltage feedback signal from the linear encoder

5.16.2 Electronic Gear Ratio Setting Examples

Setting examples are provided in this section.

- Rotary Servomotors

Step	Description	Machine Configuration		
		Ball Screw	Rotary Table	Belt and Pulley
		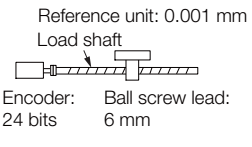	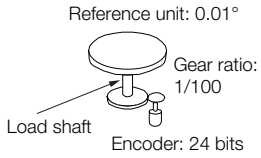	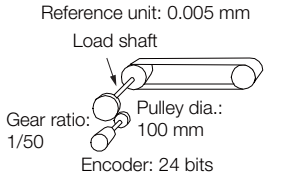
1	Machine Specifications	• Ball screw lead: 6 mm • Gear ratio: 1/1	• Rotational angle per revolution: 360° • Gear ratio: 1/100	• Pulley dia.: 100 mm (Pulley circumference: 314 mm) • Gear ratio: 1/50
2	Encoder Resolution	16,777,216 (24 bits)	16,777,216 (24 bits)	16,777,216 (24 bits)
3	Reference Unit	0.001 mm (1 μm)	0.01°	0.005 mm (5 μm)
4	Travel Distance per Load Shaft Revolution (Reference Units)	6 mm/0.001 mm = 6,000	360°/0.01° = 36,000	314 mm/0.005 mm = 62,800
5	Electronic Gear Ratio	$\frac{B}{A} = \frac{16,777,216}{6,000} \times \frac{1}{1}$	$\frac{B}{A} = \frac{16,777,216}{36,000} \times \frac{100}{1}$	$\frac{B}{A} = \frac{16,777,216}{62,800} \times \frac{50}{1}$
6	Parameters	Pn20E: 16,777,216	Pn20E: 167,772,160	Pn20E: 838,860,800
		Pn210: 6,000	Pn210: 3,600	Pn210: 62,800

- Linear Servomotors

A setting example for a Serial Converter Unit resolution of 256 is given below.

Step	Description	Machine Configuration
		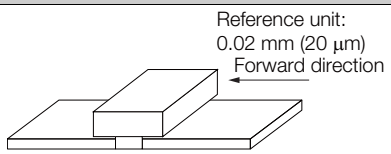
1	Linear encoder pitch	0.02 mm (20 μm)
2	Reference Unit	0.001 mm (1 μm)
3	Electronic Gear Ratio	$\frac{B}{A} = \frac{1\ (\mu m)}{20\ (\mu m)} \times 256$
4	Setting Parameters	Pn20E: 256
		Pn210: 20

5.17 Resetting the Absolute Encoder

In a system that uses an absolute encoder, the multiturn data must be reset at startup. An alarm related to the absolute encoder (A.810 or A.820) will occur when the absolute encoder must be reset, such as when the power supply is turned ON.

When you reset the absolute encoder, the multiturn data is reset and any alarms related to the absolute encoder are cleared.

Reset the absolute encoder in the following cases.

- When an A.810 alarm (Encoder Backup Alarm) occurs
- When an A.820 alarm (Encoder Checksum Alarm) occurs
- When starting the system for the first time
- When you want to reset the multiturn data in the absolute encoder
- When the Servomotor has been replaced

⚠ CAUTION

- The multiturn data will be reset to a value between -2 and +2 rotations when the absolute encoder is reset. The reference position of the machine system will change. Adjust the reference position in the host controller to the position that results from resetting the absolute encoder.
  If the machine is started without adjusting the position in the host controller, unexpected operation may cause personal injury or damage to the machine.

Information

1. The multiturn data will always be zero in the following cases. It is never necessary to reset the absolute encoder in these cases. An alarm related to the absolute encoder (A.810 or A.820) will not occur.
   - When you use a single-turn absolute encoder
   - When the encoder is set to be used as a single-turn absolute encoder (Pn002 = n.□2□□)
2. If a batteryless absolute encoder is used, an A.810 alarm (Encoder Backup Alarm) will occur the first time the power is turned ON. After you reset the absolute encoder, the A.810 alarm will no longer occur.

5.17.1 Precautions on Resetting

- You cannot use the /ALM-RST (Alarm Reset) signal from the SERVOPACK to clear the A.810 alarm (Encoder Backup Alarm) or the A.820 alarm (Encoder Checksum Alarm). Always use the operation to reset the absolute encoder to clear these alarms.
- If an A.8□□ alarm (Internal Encoder Monitoring Alarm) occurs, turn OFF the power supply to reset the alarm.

5.17.2 Preparations

Always check the following before you reset an absolute encoder.

- The parameters must not be write prohibited.
- The servo must be OFF.

5.17.3 Applicable Tools

The following table lists the tools that you can use to reset the absolute encoder.

Tool	Fn No./Function Name	Reference
Panel Operator	Fn008	*13.4.7 Reset Absolute Encoder (Fn008)* on page 13-17
Digital Operator	Fn008	Σ-7-Series Digital Operator Operating Manual (Manual No.: SIEP S800001 33)
SigmaWin+	***Encoder Setting* – *Reset Absolute Encoder***	*5.17.4 Operating Procedure* on page 5-53

5.17.4 Operating Procedure

Use the following procedure to reset the absolute encoder.

1. Confirm that the servo is OFF.
2. Click the Servo Drive Button in the workspace of the Main Window of the SigmaWin+.
3. Select **Reset Absolute Encoder** in the Menu Dialog Box.
   The Absolute Encoder Reset Dialog Box will be displayed.
4. Click the **Continue** Button.

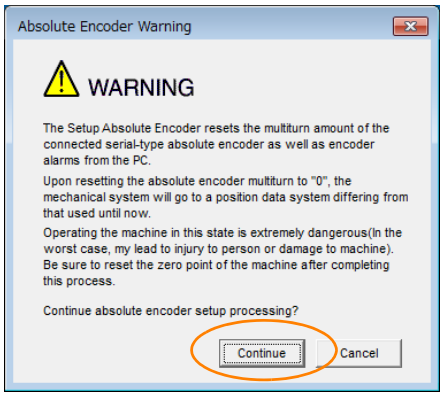

Click the **Cancel** Button to cancel resetting the absolute encoder. The Main Window will return.

5. Click the **Execute setting** Button.

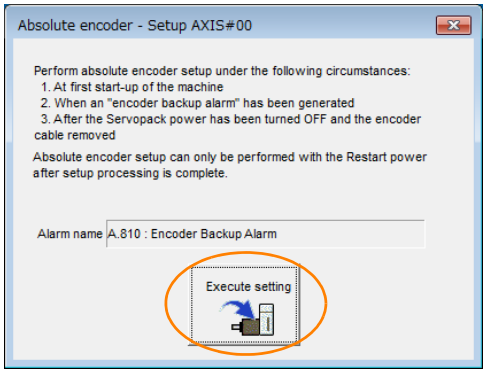

The current alarm code and name will be displayed in the **Alarm name** Box.

6. Click the **Continue** Button.

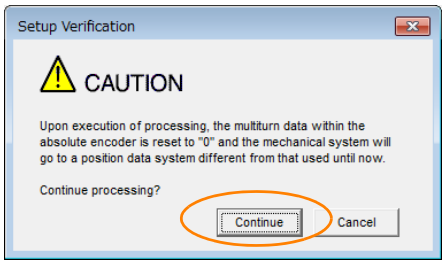

Click the **Cancel** Button to cancel resetting the absolute encoder. The previous dialog box will return.

7. Click the **OK** Button.
The absolute encoder will be reset.

When Resetting Fails
If you attempted to reset the absolute encoder when the servo was ON in the SERVOPACK, the following dialog box will be displayed and processing will be canceled.

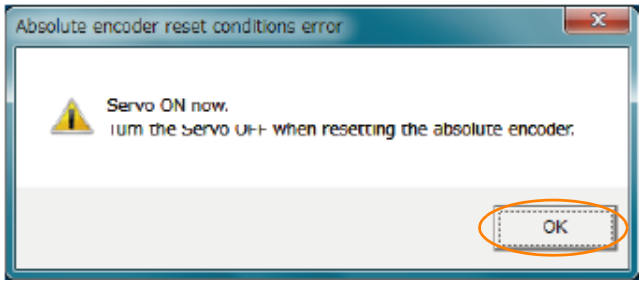

Click the **OK** Button. The Main Window will return. Turn OFF the servo and repeat the procedure from step 1.

When Resetting Is Successful
The following dialog box will be displayed when the absolute encoder has been reset.

The Main Window will return.

8. To enable the change to the settings, turn the power supply to the SERVOPACK OFF and ON again.

This concludes the procedure to reset the absolute encoder.

5.18 Setting the Origin of the Absolute Encoder

5.18.1 Setting the Origin of the Absolute Linear Encoder

You can set any position as the origin in the following Linear Encoders.

- Dr. JOHANNES HEIDENHAIN GmbH
  LIC4190, LIC3190, or LIC2190 Series
- RSF Elektronik GmbH
  MC15Y Series
- Mitutoyo Corporation
  ABS ST780A Series or ST1300 Series
  Models: ABS ST78□A/ST78□AL/ST13□□
- Renishaw PLC
  EVOLUTE Series
  Models: EL36Y□□□□□□□□□□
- Renishaw PLC
  RESOLUTE Series
  Models: RL36Y□□□□□□□□□□
- Canon Precision Inc.
  Model: PH03-36E00

Important

1. After you set the origin, the /S-RDY (Servo Ready) signal will become inactive because the system position data was changed. Always turn the SERVOPACK power supply OFF and ON again.
2. After you set the origin, the Servomotor phase data in the SERVOPACK will be discarded. If you are using a Linear Servomotor without a Polarity Sensor, execute polarity detection again to save the Servomotor phase data in the SERVOPACK.

Preparations

Always check the following before you set the origin of an absolute encoder.

- The parameters must not be write prohibited.
- The servo must be OFF.

Applicable Tools

The following table lists the tools that you can use to set the origin of the absolute linear encoder.

Tool	Fn No./Function Name	Reference
Panel Operator	Fn020	☞ *13.4.23 Set Absolute Linear Encoder Origin (Fn020)* on page 13-28
Digital Operator	Fn020	📖 Σ-7-Series Digital Operator Operating Manual (Manual No.: SIEP S800001 33)
SigmaWin+	***Encoder Setting - Zero Point Position Setting***	☞ *Operating Procedure* on page 5-55

Operating Procedure

Use the following procedure to set the origin of an absolute linear encoder.

1. Click the Servo Drive Button in the workspace of the Main Window of the SigmaWin+.
2. Select **Zero Point Position Setting** in the Menu Dialog Box.
   The Set Origin Dialog Box will be displayed.

3. Click the **Continue** Button.

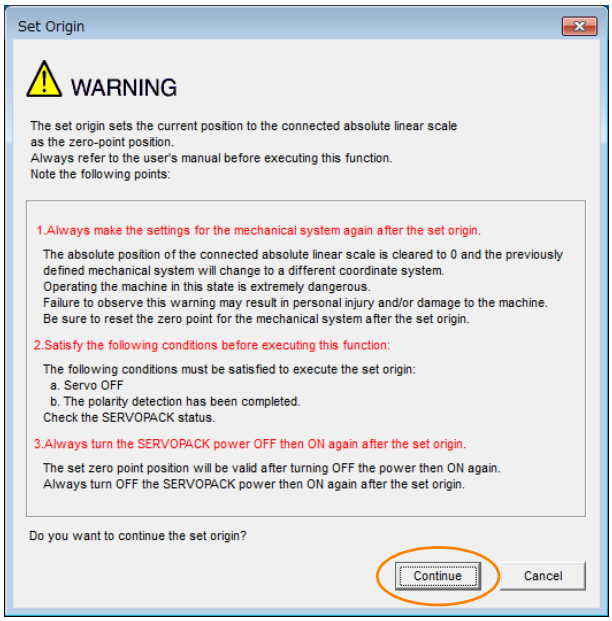

4. Click the **Execute** Button.

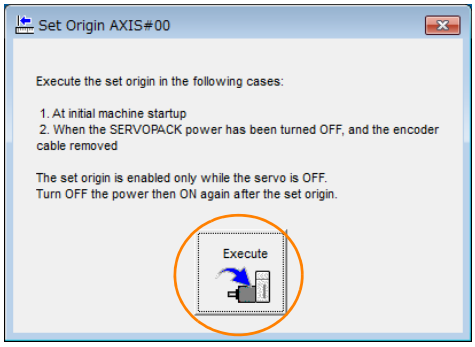

5. Click the **Continue** Button.

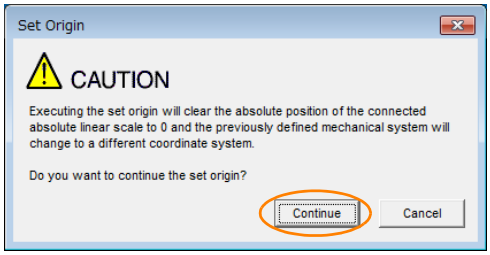

Click the **Cancel** Button to cancel setting the origin of the absolute linear encoder. The previous dialog box will return.

6. Click the **OK** Button.

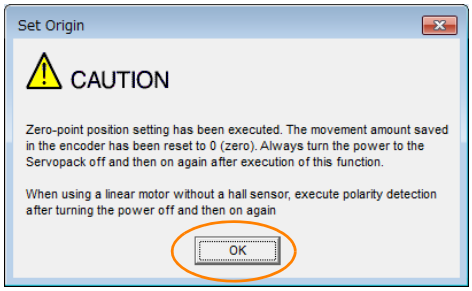

7. Turn the power supply to the SERVOPACK OFF and ON again.

8. If you use a Linear Servomotor that does not have a polarity sensor, perform polarity detection.
   Refer to the following section for details on the polarity detection.
   ☞ *5.11 Polarity Detection* on page 5-27

This concludes the procedure to set the origin of the absolute linear encoder.

5.19 Setting the Regenerative Resistor Capacity

The regenerative resistor consumes regenerative energy that is generated by the Servomotor, e.g., when the Servomotor decelerates.

If an External Regenerative Resistor is connected, you must set Pn600 (Regenerative Resistor Capacity) and Pn603 (Regenerative Resistance).

Refer to the following manual to select the capacity of a Regenerative Resistor.

Σ-7-Series Peripheral Device Selection Manual (Manual No.: SIEP S800001 32)

WARNING

- **If you connect an External Regenerative Resistor, set Pn600 and Pn603 to suitable values.**
  If a suitable value is not set, A.320 alarms (Regenerative Overload) will not be detected correctly, and the External Regenerative Resistor may be damaged or personal injury or fire may result.
- **When you select an External Regenerative Resistor, make sure that it has a suitable capacity.**
  There is a risk of personal injury or fire.

	Regenerative Resistor Capacity			Speed Position Torque	
Pn600	Setting Range	Setting Unit	Default Setting	When Enabled	Classification
	0 to SERVOPACK's maximum applicable motor capacity	10 W	0	Immediately	Setup
	Regenerative Resistance			Speed Position Torque	
Pn603	Setting Range	Setting Unit	Default Setting	When Enabled	Classification
	0 to 65,535	10 mΩ	0	Immediately	Setup

Set the regenerative resistor capacity to a value that is consistent with the allowable capacity of the External Regenerative Resistor. The setting depends on the cooling conditions of the External Regenerative Resistor.

- For self-cooling (natural convection cooling): Set the parameter to a maximum 20% of the capacity (W) of the actually installed regenerative resistor.
- For forced-air cooling: Set the parameter to a maximum 50% of the capacity (W) of the actually installed regenerative resistor.

Example For a self-cooling 100-W External Regenerative Resistor, set Pn600 to 2 (×10 W) (100 W × 20% = 20 W).

Note: 1. An A.320 alarm will be displayed if the setting is not suitable.
2. The default setting of 0 specifies that the SERVOPACK's built-in regenerative resistor or Yaskawa's Regenerative Resistor Unit is being used.

Important

1. When an External Regenerative Resistor is used at the normal rated load ratio, the resistor temperature increases to between 200°C and 300°C. Always apply derating. Consult the manufacturer for the resistor's load characteristics.
2. For safety, use an External Regenerative Resistor with a thermoswitch.

Application Functions

6

This chapter describes the application functions that you can set before you start servo system operation. It also describes the setting methods.

6.1 I/O Signal Allocations 6-5

6.1.1 Input Signal Allocations 6-5
6.1.2 Output Signal Allocations 6-8
6.1.3 ALM (Servo Alarm) Signal 6-9
6.1.4 ALO1 to ALO3 (Alarm Code) Signals 6-10
6.1.5 /WARN (Warning) Signal 6-10
6.1.6 /TGON (Rotation Detection) Signal 6-11
6.1.7 /S-RDY (Servo Ready) Signal 6-12

6.2 Operation for Momentary Power Interruptions . . 6-13

6.3 SEMI F47 Function 6-14

6.4 Setting the Motor Maximum Speed 6-16

6.5 Speed Control 6-17

6.5.1 Basic Settings for Speed Control 6-17
6.5.2 Soft Start Settings 6-24
6.5.3 Speed Reference Filter 6-24
6.5.4 Zero Clamping 6-25
6.5.5 /V-CMP (Speed Coincidence Detection) Signal 6-27
6.5.6 Operation Examples for Changing the Motor Direction 6-28

6.6 Position Control 6-30

6.6.1 Basic Settings for Position Control 6-31
6.6.2 CLR (Position Deviation Clear) Signal Function and Settings 6-33
6.6.3 Reference Pulse Input Multiplication Switching 6-34
6.6.4 Smoothing Settings 6-35
6.6.5 /COIN (Positioning Completion) Signal 6-37
6.6.6 /NEAR (Near) Signal 6-38
6.6.7 Reference Pulse Inhibition Function 6-39

6.7 Torque Control 6-40

6.7.1 Basic Settings for Torque Control 6-40
6.7.2 Adjusting the Torque Reference Offset 6-41
6.7.3 Torque Reference Filter Settings 6-45
6.7.4 Speed Limit during Torque Control 6-45

6.8 Encoder Divided Pulse Output 6-48

6.8.1 Encoder Divided Pulse Output Signals 6-48
6.8.2 Setting for the Encoder Divided Pulse Output . . 6-53

6.9 Internal Set Speed Control 6-55

6.9.1 Input Signals for Internal Set Speed Control . . . 6-55
6.9.2 Setting the Control Method to Internal Set Speed Control 6-56
6.9.3 Settings for Internal Set Speed Control 6-56
6.9.4 Changing Internal Set Speeds with Input Signals 6-57

6.10 Selecting Combined Control Methods . . . 6-59

6.10.1 Setting Pn000 = n.□□X□ (Control Method Selection) to 4, 5, or 6 6-59
6.10.2 Setting Pn000 = n.□□X□ (Control Method Selection) to 7, 8, or 9 6-62
6.10.3 Setting Pn000 = n.□□X□ (Control Method Selection) to A or B 6-62

6.11 Selecting Torque Limits 6-64

6.11.1 Internal Torque Limits 6-64
6.11.2 External Torque Limits 6-65
6.11.3 Limiting Torque with an Analog Reference 6-68
6.11.4 Limiting Torque with an External Torque Limit and an Analog Voltage Reference 6-70
6.11.5 /CLT (Torque Limit Detection) Signal 6-73

6.12 Absolute Encoders 6-74
6.12.1 Connecting an Absolute Encoder 6-75
6.12.2 Structure of the Position Data of the Absolute Encoder 6-75
6.12.3 Output Ports for the Position Data from the Absolute Encoder 6-76
6.12.4 Reading the Position Data from the Absolute Encoder 6-77
6.12.5 Transmission Specifications 6-81
6.12.6 Calculating the Current Position in Machine Coordinates 6-82
6.12.7 Alarm Output from Output Ports for the Position Data from the Absolute Encoder 6-83
6.12.8 Multiturn Limit Setting 6-83
6.12.9 Multiturn Limit Disagreement Alarm (A.CC0) . . . 6-85

6.13 Absolute Linear Encoders 6-88
6.13.1 Connecting an Absolute Linear Encoder 6-88
6.13.2 Structure of the Position Data of the Absolute Linear Encoder 6-88
6.13.3 Output Ports for the Position Data from the Absolute Linear Encoder 6-89
6.13.4 Reading the Position Data from the Absolute Linear Encoder 6-90
6.13.5 Transmission Specifications 6-94
6.13.6 Calculating the Current Position in Machine Coordinates 6-95
6.13.7 Alarm Output from the Output Ports for the Position Data from the Absolute Linear Encoder 6-96

6.14 Software Reset 6-97
6.14.1 Preparations 6-97
6.14.2 Applicable Tools 6-97
6.14.3 Operating Procedure 6-97

6.15 Initializing the Vibration Detection Level . . . 6-99
6.15.1 Preparations 6-99
6.15.2 Applicable Tools 6-100
6.15.3 Operating Procedure 6-100
6.15.4 Related Parameters 6-102

6.16 Adjusting the Motor Current Detection Signal Offset . . 6-103
6.16.1 Automatic Adjustment 6-103
6.16.2 Manual Adjustment 6-105

6.17 Forcing the Motor to Stop 6-107
6.17.1 FSTP (Forced Stop Input) Signal 6-107
6.17.2 Stopping Method Selection for Forced Stops 6-107
6.17.3 Resetting Method for Forced Stops 6-109

6.18 Overheat Protection 6-110
6.18.1 Connecting the Overheat Protection Input (TH) Signal 6-110
6.18.2 Overheat Protection Selection 6-111

6.1 I/O Signal Allocations

Functions are allocated to the pins on the I/O signal connector (CN1) in advance. You can change the allocations and the polarity for some of the connector pins. Function allocations and polarity settings are made with parameters.

This section describes the I/O signal allocations.

6.1.1 Input Signal Allocations

Although you can use the input signals with the default settings, you can also allocate the desired input signals to pins 40 to 46 on the I/O signal connector (CN1).

Specify the allocation method to use in Pn50A = n.□□□X (Input Signal Allocation Mode).

Parameter		Description	When Enabled	Classification
Pn50A	n.□□□0 (default setting)	Use the sequence input signal terminals with the default allocations.	After restart	Setup
	n.□□□1	Change the individual sequence input signal allocations.		

Using the Default Settings

The default settings for signal allocations are given in the following table.
If you change the control method that is set in Pn000 = n.□□X□, the signals will be allocated as required for the specified control method, as given in the following table.

If the control method is set to internal set speed control with contact commands (Pn000 = □□3□), the /P-CON signal (CN1-41) will be allocated as the /SPD-D signal, the /P-CL signal (CN1-45) as the /SPD-A signal, and the /N-CL signal (CN1-46) as the /SPD-B signal.

<table>
<tr><th rowspan="2">Pn000 = n.□□X□</th><th rowspan="2">Control Method Selection</th><th colspan="7">CN1 Pin No.</th></tr>
<tr><th>40</th><th>41</th><th>42</th><th>43</th><th>44</th><th>45</th><th>46</th></tr>
<tr><td>0</td><td>Speed control</td><td rowspan="13">/S-ON</td><td rowspan="3">/P-CON</td><td rowspan="13">P-OT</td><td rowspan="13">N-OT</td><td rowspan="13">/ALM-RST</td><td rowspan="3">/P-CL</td><td rowspan="3">/N-CL</td></tr>
<tr><td>1</td><td>Position control</td></tr>
<tr><td>2</td><td>Torque control</td></tr>
<tr><td>3</td><td>Internal set speed control</td><td rowspan="4">/SPD-D</td><td rowspan="4">/SPD-A</td><td rowspan="4">/SPD-B</td></tr>
<tr><td>4</td><td>Switching between internal set speed control and speed control with analog references</td></tr>
<tr><td>5</td><td>Switching between internal set speed control and position control</td></tr>
<tr><td>6</td><td>Switching between internal set speed control and torque control</td></tr>
<tr><td>7</td><td>Switching between position control and speed control</td><td rowspan="3">/C-SEL</td><td rowspan="6">/P-CL</td><td rowspan="6">/N-CL</td></tr>
<tr><td>8</td><td>Switching between position control and torque control</td></tr>
<tr><td>9</td><td>Switching between torque control and speed control</td></tr>
<tr><td>A</td><td>Switching between speed control with analog references and speed control with zero clamping</td><td>/ZCLAMP</td></tr>
<tr><td>B</td><td>Switching between normal position control and position control with reference pulse inhibition</td><td>/INHIBIT</td></tr>
</table>

Changing Input Signal Allocations

Important

- If you change the default polarity settings for the /S-ON (Servo ON), P-OT (Forward Drive Prohibit), or N-OT (Reverse Drive Prohibit) signal, the main circuit power supply will not be turned OFF and the overtravel function will not operate if there are signal line disconnections or other problems. If you must change the polarity of one of these signals, verify operation and make sure that no safety problems will exist.
- If you allocate two or more signals to the same input circuit, a logical OR of the inputs will be used and all of the allocated signals will operate accordingly. This may result in unexpected operation.

The input signals that you can allocate to the pins on the I/O signal connector (CN1) and the related parameters are given in the following table.

Input Signal	Input Signal Name	Parameter
/S-ON	Servo ON	Pn50A = n.□□X□
/P-CON	Proportional Control	Pn50A = n.□X□□
P-OT	Forward Drive Prohibit	Pn50A = n.X□□□
N-OT	Reverse Drive Prohibit	Pn50B = n.□□□X
/ARM-RST	Alarm Reset	Pn50B = n.□□X□
/P-CL	Forward External Torque Limit	Pn50B = n.□X□□
/N-CL	Reverse External Torque Limit	Pn50B = n.X□□□
/SPD-D	Motor Direction	Pn50C = n.□□□X
/SPD-A	Internal Set Speed Selection	Pn50C = n.□□X□
/SPD-B	Internal Set Speed Selection	Pn50C = n.□X□□
/C-SEL	Control Selection	Pn50C = n.X□□□
/ZCLAMP	Zero Camping	Pn50D = n.□□□X
/INHIBIT	Reference Pulse Inhibit	Pn50D = n.□□X□
/G-SEL	Gain Selection	Pn50D = n.□X□□
/P-DET	Polarity Detection	Pn50D = n.X□□□
SEN	Absolute Data Request	Pn515 = n.□□□X
/PSEL	Reference Pulse Input Multiplication Switch	Pn515 = n.□□X□
FSTP	Forced Stop	Pn516 = n.□□□X

◆ Relationship between Parameter Settings, Allocated Pins, and Polarities

The following table shows the relationship between the input signal parameter settings, the pins on the I/O signal connector (CN1), and polarities.

Parameter Setting	Pin No.	Description
0	40	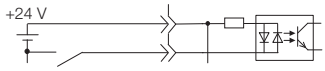 A reverse signal (a signal with "/" before the signal abbreviation, such as the /S-ON signal) is active when the contacts are ON (closed). A signal that does not have "/" before the signal abbreviation (such as the P-OT signal) is active when the contacts are OFF (open).
1	41	
2	42	
3	43	
4	44	
5	45	
6	46	
7	–	The input signal is not allocated to a connector pin and it is always active. If the signal is processed on a signal edge, then it is always inactive.
8	–	The input signal is not allocated to a connector pin and it is always inactive. Set the parameter to 8 if the signal is not used.
9	40	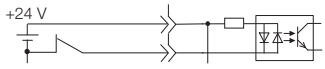 A reverse signal (a signal with "/" before the signal abbreviation, such as the /S-ON signal) is active when the contacts are OFF (open). A signal that does not have "/" before the signal abbreviation (such as the P-OT signal) is active when the contacts are ON (closed).
A	41	
B	42	
C	43	
D	44	
E	45	
F	46	

Note: Refer to the following section for details on input signal parameter settings.
☞ *14.1 List of Parameters* on page 14-2

Example of Changing Input Signal Allocations

The following example shows reversing the P-OT (Forward Drive Prohibit) signal allocated to CN1-42 and the /P-CL (External Torque Limit) signal allocated to CN1-45.

Pn50A = n.2□□0	Pn50B = n.□5□□	Before change
↓	↓	
Pn50A = n.5□□1	Pn50B = n.□2□□	After change

Refer to the following section for the parameter setting procedure.
☞ *5.1.3 Parameter Setting Methods* on page 5-6

Confirming the Allocation Status of Input Signals

You can confirm the allocation status of input signals with the I/O Signal Allocations Window of the SigmaWin+. Refer to the following section for details.
☞ *9.2.3 I/O Signals Status Monitor* on page 9-6

6.1.2 Output Signal Allocations

You can allocate the desired output signals to pins 25 to 30 and 37 to 39 on the I/O signal connector (CN1). You set the allocations in the following parameters: Pn50E, Pn50F, Pn510, Pn512, Pn513, Pn514, and Pn517.

Important

- The signals that are not detected are considered to be OFF. For example, the /COIN (Positioning Completion) signal is considered to be OFF during speed control.
- Reversing the polarity of the /BK (Brake) signal, i.e., changing it to positive logic, will prevent the holding brake from operating if its signal line is disconnected. If you must change the polarity of this signal, verify operation and make sure that no safety problems will exist.
- If you allocate more than one signal to the same output circuit, a logical OR of the signals will be output.

The following table shows the relationship between the parameters and the output signals that can be allocated to the pins on the I/O signal connector (CN1).

Output Signals	Output Signal Name	Parameter
/COIN	Positioning Completion	Pn50E = n.□□□X
/V-CMP	Speed Coincidence Detection	Pn50E = n.□□X□
/TGON	Rotation Detection	Pn50E = n.□X□□
/S-RDY	Servo Ready	Pn50E = n.X□□□
/CLT	Torque Limit Detection	Pn50F = n.□□□X
/VLT	Speed Limit Detection	Pn50F = n.□□X□
/BK	Brake	Pn50F = n.□X□□
/WARN	Warning	Pn50F = n.X□□□
/NEAR	Near	Pn510 = n.□□□X
/PSELA	Reference Pulse Input Multiplication Switching Output	Pn510 = n.□X□□
/PM	Preventative Maintenance	Pn514 = n.□X□□
ALO1	Alarm Code Output	Pn517 = n.□□□X
ALO2		Pn517 = n.□□X□
ALO3		Pn517 = n.□X□□

◆ Relationship between Parameter Settings and Allocated Pin Numbers

The following table shows the relationship between the output signal parameter settings and the pin numbers on the I/O signal connector (CN1).

Parameter Setting	Pin No.	Description
0	–	Disable (signal output is not used)
1	25 or 26	Output the allocated signal from the CN1-25 or CN1-26 output terminal.
2	27 or 28	Output the allocated signal from the CN1-27 or CN1-28 output terminal.
3	29 or 30	Output the allocated signal from the CN1-29 or CN1-30 output terminal.
4	37	Output the allocated signal from the CN1-37 output terminal.
5	38	Output the allocated signal from the CN1-38 output terminal.
6	39	Output the allocated signal from the CN1-39 output terminal.

◆ Output Signal Polarity Switching

The polarity of output signals is switched using Pn512 and Pn513.

Parameter			Pin No.	Description
Parameter No.		Setting Value		
Pn512	n.□□□X	0	25 or 26	The signal is not inverted.
		1		The signal is inverted.
	n.□□X□	0	27 or 28	The signal is not inverted.
		1		The signal is inverted.
	n.□X□□	0	29 or 30	The signal is not inverted.
		1		The signal is inverted.
	n.X□□□	0	37	The signal is not inverted.
		1		The signal is inverted.
Pn513	n.□□□X	0	38	The signal is not inverted.
		1		The signal is inverted.
	n.□□X□	0	39	The signal is not inverted.
		1		The signal is inverted.

Example of Changing Output Signal Allocations

The following example shows disabling the /COIN (Positioning Completion) signal allocated to CN1-25 and CN1-26 and allocating the /BK (Brake) signal.

Pn50E = n.□□1□ Pn50F = n.□0□□ Before change

↓ ↓

Pn50E = n.□□0□ Pn50F = n.□1□□ After change

Refer to the following section for the parameter setting procedure.

☞ *5.1.3 Parameter Setting Methods* on page 5-6

Confirming the Allocation Status of Output Signals

You can confirm the allocation status of output signals with the I/O Signal Allocations Window of the SigmaWin+. Refer to the following section for details.

☞ *9.2.3 I/O Signals Status Monitor* on page 9-6

6.1.3 ALM (Servo Alarm) Signal

This signal is output when the SERVOPACK detects an error.

> **Important**
> Configure an external circuit so that this alarm output turns OFF the main circuit power supply to the SERVOPACK whenever an error occurs.

Type	Signal	Connector Pin No.	Signal Status	Meaning
Output	ALM	CN1-31 and CN1-32	ON (closed)	Normal SERVOPACK status
			OFF (open)	SERVOPACK alarm

Alarm Reset Methods

Refer to the following section for information on the alarm reset methods.

☞ *12.2.3 Resetting Alarms* on page 12-41

6.1.4 ALO1 to ALO3 (Alarm Code) Signals

The ALO1 to ALO3 (Alarm Code) signals report alarms and warnings that occur in the SERVOPACK. Use the alarm code output signals as required to display the contents of the alarm at the host controller (e.g., HMI).

Refer to the following sections for the relationship between the alarm code output and the alarms/warnings.

☞ *12.2.1 List of Alarms* on page 12-5
☞ *12.3.1 List of Warnings* on page 12-48

ALO1 to ALO3 (Alarm Code) Signals

The ALO1 to ALO3 signals are allocated to the following output signal terminals (CN1) by default.

Type	Signal	Name	Pin No.
Output	ALO1	Alarm Code Output	CN1-37
	ALO2		CN1-38
	ALO3		CN1-39
	SG	Signal ground for alarm code output	CN1-1

You can allocate the ALO1 to ALO3 signals to connector pins other than those given above. Refer to the following section for details.

☞ *6.1.2 Output Signal Allocations* on page 6-8

6.1.5 /WARN (Warning) Signal

Both alarms and warnings are generated by the SERVOPACK. Alarms indicate errors in the SERVOPACK for which operation must be stopped immediately. Warnings indicate situations that may results in alarms but for which stopping operation is not yet necessary.

The /WARN (Warning) signal indicates that a condition exists that may result in an alarm.

Type	Signal	Connector Pin No.	Signal Status	Meaning
Output	/WARN	Must be allocated.	ON (closed)	Warning
			OFF (open)	Normal status

Note: You must allocate the /WARN signal to use it. Use Pn50F = n.X□□□ (/WARN (Warning Output) Signal Allocation) to allocate the signal to a connector pin. Refer to the following section for details.
☞ *6.1.2 Output Signal Allocations* on page 6-8

Setting the Warning Code Output

You can use the ALO1 to ALO3 (Alarm Code Output) signals to output warning codes. Use Pn001 = n.X□□□ (Warning Code Output Selection) to set the output.

Refer to the following sections for details on the warnings.

☞ *12.3.1 List of Warnings* on page 12-48

Parameter		Description	When Enabled	Classification
Pn001	n.0□□□ (default setting)	Output only alarm codes on the ALO1 to ALO3 terminals.	After restart	Setup
	n.1□□□	Output both warning codes and alarm codes on the ALO1 to ALO3 terminals. If there is an alarm, the alarm code is output.		

6.1.6 /TGON (Rotation Detection) Signal

The /TGON signal indicates that the Servomotor is operating.

This signal is output when the shaft of the Servomotor rotates at the setting of Pn502 (Rotation Detection Level) or faster or the setting of Pn581 (Zero Speed Level) or faster.

The /TGON signal is allocated to CN1-27 and CN1-28 by default.

Type	Signal	Connector Pin No.	Signal Status	Servomotor	Meaning
Output	/TGON	CN1-27 and CN1-28 (default setting)	ON (closed)	Rotary Servomotors	The Servomotor is operating at the setting of Pn502 or faster.
				Linear Servomotors	The Servomotor is operating at the setting of Pn581 or faster.
			OFF (open)	Rotary Servomotors	The Servomotor operating at a speed that is slower than the setting of Pn502.
				Linear Servomotors	The Servomotor is operating at a speed that is slower than the setting of Pn581.

Note: Use Pn50E = n.□X□□ (/TGON (Rotation Detection Output) Signal Allocation) to allocate the /TGON signal to another connector pin. Refer to the following section for details.
☞ *6.1.2 Output Signal Allocations* on page 6-8

Setting the Rotation Detection Level

Use the following parameter to set the speed detection level at which to output the /TGON signal.

- Rotary Servomotors

Pn502	Rotation Detection Level			Speed Position Torque	
	Setting Range	Setting Unit	Default Setting	When Enabled	Classification
	1 to 10,000	1 min^{-1}	20	Immediately	Setup

- Linear Servomotors

Pn581	Zero Speed Level			Speed Position Force	
	Setting Range	Setting Unit	Default Setting	When Enabled	Classification
	1 to 10,000	1 mm/s	20	Immediately	Setup

6.1.7 /S-RDY (Servo Ready) Signal

The /S-RDY (Servo Ready) signal turns ON when the SERVOPACK is ready to accept the /S-ON (Servo ON) input signal.

The /S-RDY signal is turned ON under the following conditions.

- Main circuit power supply is ON.
- There is no hard wire base block state.
- There are no alarms.
- There is no forced stop state (FSTP).
- If an absolute encoder is used, the SEN (Absolute Data Request) signal is ON (high level).
- If a Servomotor without a polarity sensor is used, polarity detection has been completed. *
- If an absolute encoder is used, the SERVOPACK must be ready to accept the /S-ON (Servo ON) signal and, if the SEN signal is ON (high level), the output of the position data from the absolute encoder to the host controller must have been completed.

* Do not include this condition if the /S-ON (Servo ON) signal is input for the first time after the control power supply was turned ON. In that case, when the first /S-ON signal is input, polarity detection is started immediately and the /S-RDY signal turns ON at the completion of polarity detection.

The /S-RDY signal is allocated to CN1-29 and CN1-30 by default.

Type	Signal	Connector Pin No.	Signal Status	Meaning
Output	/S-RDY	CN1-29 and CN1-30 (default setting)	ON (closed)	Ready to receive the /S-ON (Servo ON) signal.
			OFF (open)	Not ready to receive the /S-ON (Servo ON) signal.

Note: 1. Use Pn50E = n.X□□□ (/S-RDY (Servo Ready) Signal Allocation) to allocate the /S-RDY signal to another connector pin. Refer to the following section for details.
☞ *6.1.2 Output Signal Allocations* on page 6-8

2. Refer to the following section for information on the hard wire base block and the /S-RDY signal.
☞ *11.2.7 /S-RDY (Servo Ready Output) Signal* on page 11-7

6.2 Operation for Momentary Power Interruptions

Even if the main power supply to the SERVOPACK is interrupted momentarily, power supply to the motor (servo ON status) will be maintained for the time set in Pn509 (Momentary Power Interruption Hold Time).

Pn509	Momentary Power Interruption Hold Time			Speed Position Torque	
	Setting Range	Setting Unit	Default Setting	When Enabled	Classification
	20 to 50,000	1 ms	20	Immediately	Setup

If the momentary power interruption time is equal to or less than the setting of Pn509, power supply to the motor will be continued. If it is longer than the setting, power supply to the motor will be stopped. Power will be supplied to the motor again when the main circuit power supply recovers.

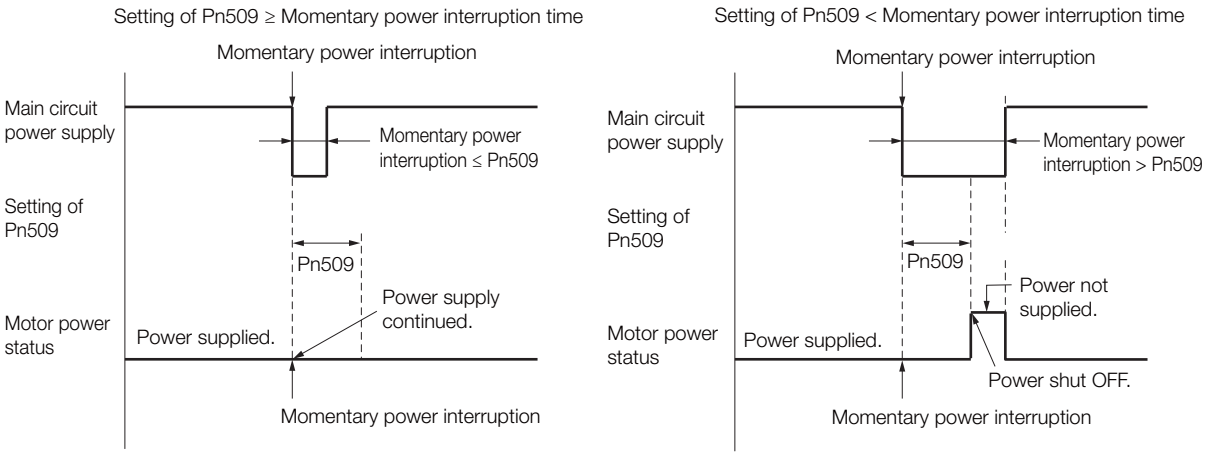

Information

1. If the momentary power interruption time exceeds the setting of Pn509, the /S-RDY (Servo Ready) signal will turn OFF.
2. If uninterruptible power supplies are used for the control power supply and main circuit power supply, the SERVOPACK can withstand a power interruption that lasts longer than 50,000 ms.
3. The holding time of the SERVOPACK control power supply is approximately 100 ms. If control operations become impossible during a momentary power interruption of the control power supply, the setting of Pn509 will be ignored and the same operation will be performed as for when the power supply is turned OFF normally.

Important

The holding time of the main circuit power supply depends on the output from the SERVOPACK. If the load on the Servomotor is large and an A.410 alarm (Undervoltage) occurs, the setting of Pn509 will be ignored.

6.3 SEMI F47 Function

The SEMI F47 function detects an A.971 warning (Undervoltage) and limits the output current if the DC main circuit power supply voltage to the SERVOPACK drops to a specified value or lower because the power was momentarily interrupted or the main circuit power supply voltage was temporarily reduced.

This function complies with the SEMI F47 standards for semiconductor manufacturing equipment.

You can combine this function with the momentary power interruption hold time (Pn509) to allow the Servomotor to continue operating without stopping for an alarm or without recovery work even if the power supply voltage drops.

Execution Sequence

This function can be executed either with the host controller or with the SERVOPACK. Use Pn008 = n.□□X□ (Function Selection for Undervoltage) to specify whether the function is executed by the host controller or by the SERVOPACK.

The default setting (Pn008 = n.□□0□) disables detection of an A.971 warning (Undervoltage).

Parameter		Description	When Enabled	Classification
Pn008	n.□□0□ (default setting)	Do not detect undervoltage.	After restart	Setup
	n.□□1□	Detect undervoltage warning and limit torque at host controller.		
	n.□□2□	Detect undervoltage warning and limit torque with Pn424 and Pn425 (i.e., only in SERVOPACK).		

◆ Execution with the Host Controller (Pn008 = n.□□1□)

The host controller limits the torque in response to an A.971 warning (Undervoltage).

The host controller removes the torque limit after the Undervoltage warning is cleared.

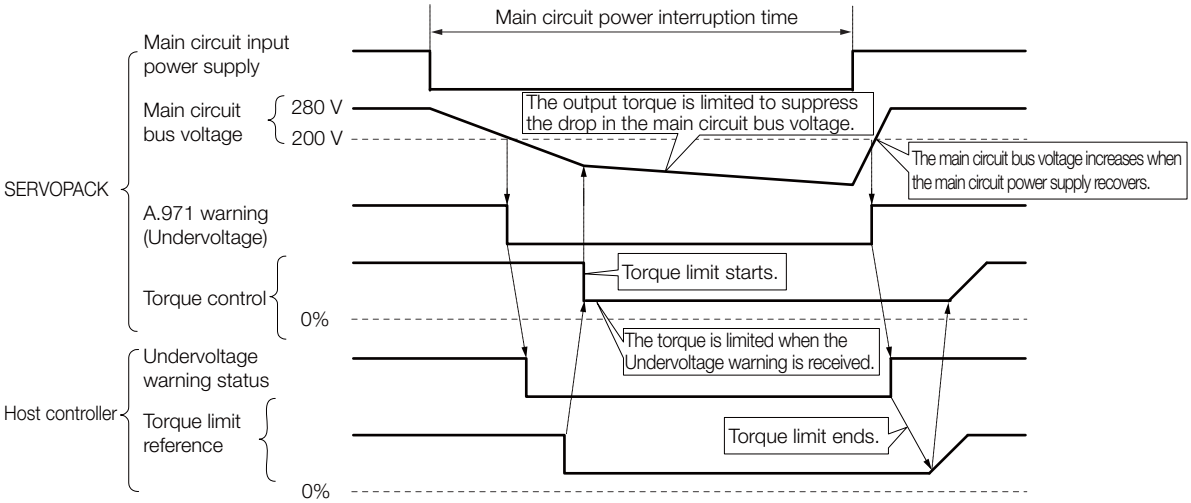

◆ Execution with the SERVOPACK (Pn008 = n.□□2□)

The torque is limited in the SERVOPACK in response to an Undervoltage warning.
The SERVOPACK controls the torque limit for the set time after the Undervoltage warning is cleared.

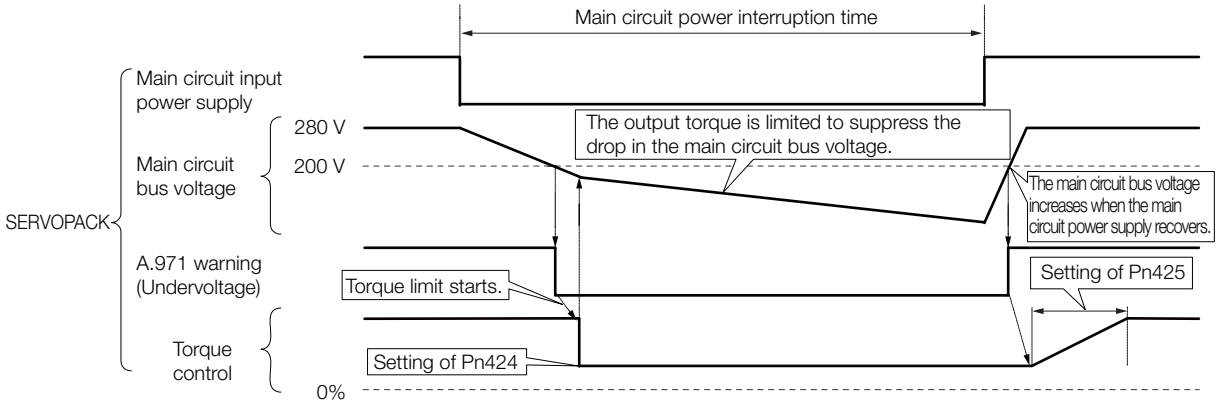

Related Parameters

The following parameters are related to the SEMI F47 function.

Pn424	Torque Limit at Main Circuit Voltage Drop			Speed Position Torque	
	Setting Range	Setting Unit	Default Setting	When Enabled	Classification
	0 to 100	1%*	50	Immediately	Setup
Pn425	Release Time for Torque Limit at Main Circuit Voltage Drop			Speed Position Torque	
	Setting Range	Setting Unit	Default Setting	When Enabled	Classification
	0 to 1,000	1 ms	100	Immediately	Setup
Pn509	Momentary Power Interruption Hold Time			Speed Position Torque	
	Setting Range	Setting Unit	Default Setting	When Enabled	Classification
	20 to 50,000	1 ms	20	Immediately	Setup

* Set a percentage of the motor rated torque.

Note: If you will use the SEMI F47 function, set the time to 1,000 ms.

Important

- This function handles momentary power interruptions for the voltage and time ranges stipulated in SEMI F47. An uninterruptible power supply (UPS) is required as a backup for momentary power interruptions that exceed these voltage and time ranges.
- Set the host controller or SERVOPACK torque limit so that a torque reference that exceeds the specified acceleration torque will not be output when the power supply for the main circuit is restored.
- For a vertical axis, do not limit the torque to a value that is lower than the holding torque.
- This function limits torque within the range of the SERVOPACK's capability for power interruptions. It is not intended for use under all load and operating conditions. Set the parameters while monitoring operation on the actual machine.
- You can set the momentary power interruption hold time to increase the amount of time from when the power supply is turned OFF until power supply to the motor is stopped. To stop the power supply to the motor immediately, use the /S-ON (Servo ON) signal.

6.4 Setting the Motor Maximum Speed

You can set the maximum speed of the Servomotor with the following parameter.

- Rotary Servomotors

Pn316	Maximum Motor Speed			Speed Position Torque	
	Setting Range	Setting Unit	Default Setting	When Enabled	Classification
	0 to 65,535	1 min^{-1}	10,000	After restart	Setup

- Linear Servomotors

Pn385	Maximum Motor Speed			Speed Position Force	
	Setting Range	Setting Unit	Default Setting	When Enabled	Classification
	1 to 100	100 mm/s	50	After restart	Setup

You can achieve the following by lowering the maximum speed of the Servomotor.

- If the Servomotor speed exceeds the setting, an A.510 alarm (Overspeed) will occur.
- With a Linear Servomotor, you can increase the upper limit for the setting of Pn281 (Encoder Output Resolution). Refer to the following section for details.
  ☞ *6.8 Encoder Divided Pulse Output* on page 6-48

Changing the setting of the parameter is effective in the following cases.

- To protect the machine by stopping machine operation with an alarm when the set speed is reached or exceeded
- To limit the speed so that the load is driven beyond the allowable moment of inertia
  Refer to relevant manual from the following list for the relationship between the speed and the allowable moment of inertia.
  - Σ-7-Series Rotary Servomotor Product Manual (Manual No.: SIEP S800001 36)
  - Σ-7-Series Direct Drive Servomotor Product Manual (Manual No.: SIEP S800001 38)
  - Σ-7-Series Linear Servomotor Product Manual (Manual No.: SIEP S800001 37)
- To increase the encoder output resolution and increase the position resolution managed by the host controller (for a Linear Servomotor)

6.5 Speed Control

There are two types of speed control: speed control with an analog voltage reference and speed control with internal set speeds. This section describes speed control with an analog voltage reference.

You input a speed reference into the SERVOPACK with an analog voltage to operate the Servomotor at the reference speed. Refer to the following section for information on speed control with internal set speeds.

☞ *6.9 Internal Set Speed Control* on page 6-55

- If you create a position loop in the host controller, you use the SERVOPACK for speed control.
- If you need to control only the speed of the Servomotor, you use the SERVOPACK for speed control.

You set the control method in Pn000 = n.□□X□ (Control Method Selection).

Set Pn000 to n.□□0□ to set the control method to speed control.

Parameter		Meaning	When Enabled	Classification
Pn000	n.□□0□ (default setting)	Speed control with analog references	After restart	Setup

6.5.1 Basic Settings for Speed Control

This section describes the use of the V-REF (Speed Reference Input) Signal, /SPD-D (Motor Direction Input) Signal, speed reference input gain, and speed reference offset adjustment in speed control with analog voltages.

V-REF (Speed Reference Input) Signal

Input the V-REF (Speed Reference Input) signal to the SERVOPACK to operate the Servomotor at a speed that is proportional to the input voltage.

Type	Signal	Connector Pin No.	Meaning
Input	V-REF	CN1-5	Speed reference input signal
	SG	CN1-6	Signal ground for speed reference input signal

Maximum input voltage: ±12 VDC

If you will use a host controller, such as a programmable controller, for position control, connect the above output pins to the speed reference output terminals on the host controller.

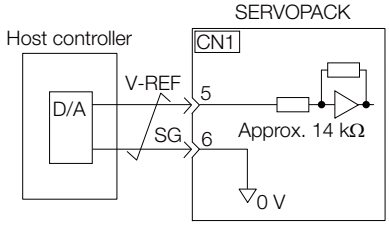

Note: Always use twisted-pair cables to control noise.

/SPD-D (Motor Direction Input) Signal

You can turn the /SPD-D signal ON and OFF to change the direction of the Servomotor.

Classification	Signal	Connector Pin No.	Description
Input	/SPD-D	Must be allocated.	Changes the Servomotor direction.

Note: You must allocate the /SPD-D signal to use it. Use Pn50C = n.□□□X (/SPD-D (Motor Direction) Signal Allocation) to allocate the signal to a connector pin. Refer to the following section for details.

☞ *6.1.1 Input Signal Allocations* on page 6-5

Relation between the /SPD-D (Motor Direction Input) Signal and V-REF (Speed Reference Input) Signal

The following graphs show the relationship between the V-REF (Speed Reference Input) signal and the speed reference depending on whether the /SPD-D signal is ON or OFF.

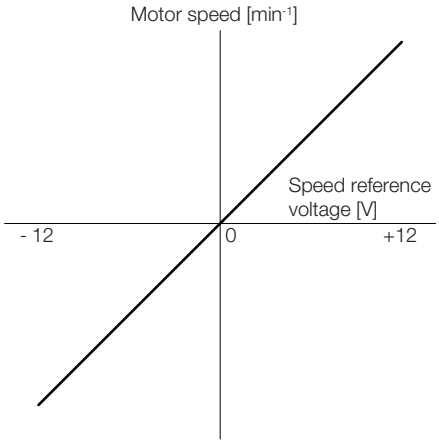

/SPD-D (Motor Direction Input) Signal: OFF

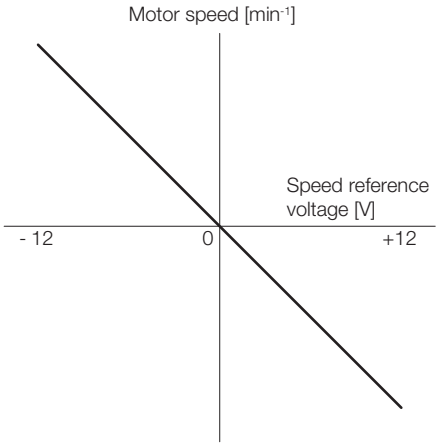

/SPD-D (Motor Direction Input) Signal: ON

Example

Speed Reference Input Example
If Pn300 is set to 600, the motor would operate at the rated speed for 6.00 V.

- For Rotary Servomotors

Speed Reference Input	/SPD-D Signal	Rotation Direction	Motor Speed	For SGM7A Servomotor
+6 V	ON	Reverse	Rated motor speed	-3000 min^{-1}
	OFF	Forward		3000 min^{-1}
-3 V	ON	Forward	1/2 of rated motor speed	1500 min^{-1}
	OFF	Reverse		-1500 min^{-1}
+1 V	ON	Reverse	1/6 of rated motor speed	-500 min^{-1}
	OFF	Forward		500 min^{-1}

- Linear Servomotors

Speed Reference Input	/SPD-D Signal	Rotation Direction	Movement Speed	For SGLGW-30A Linear Servomotor
+6 V	ON	Reverse	Rated motor speed	-1500 mm/s
	OFF	Forward		1500 mm/s
-3 V	ON	Forward	1/2 of rated motor speed	750 mm/s
	OFF	Reverse		-750 mm/s
+1 V	ON	Reverse	1/6 of rated motor speed	-250 mm/s
	OFF	Forward		250 mm/s

Setting the Speed Reference Input Gain (Pn300)

The reference voltage for the rated motor speed is set for the speed reference input gain (Pn300) to define the relationship between the position reference voltage and the motor speed.

Pn300	Speed Reference Input Gain			Speed Position Torque	
	Setting Range	Setting Unit	Default Setting	When Enabled	Classification
	150 to 3,000	0.01 V	600 (rated speed for 6.00 V)	Immediately	Setup

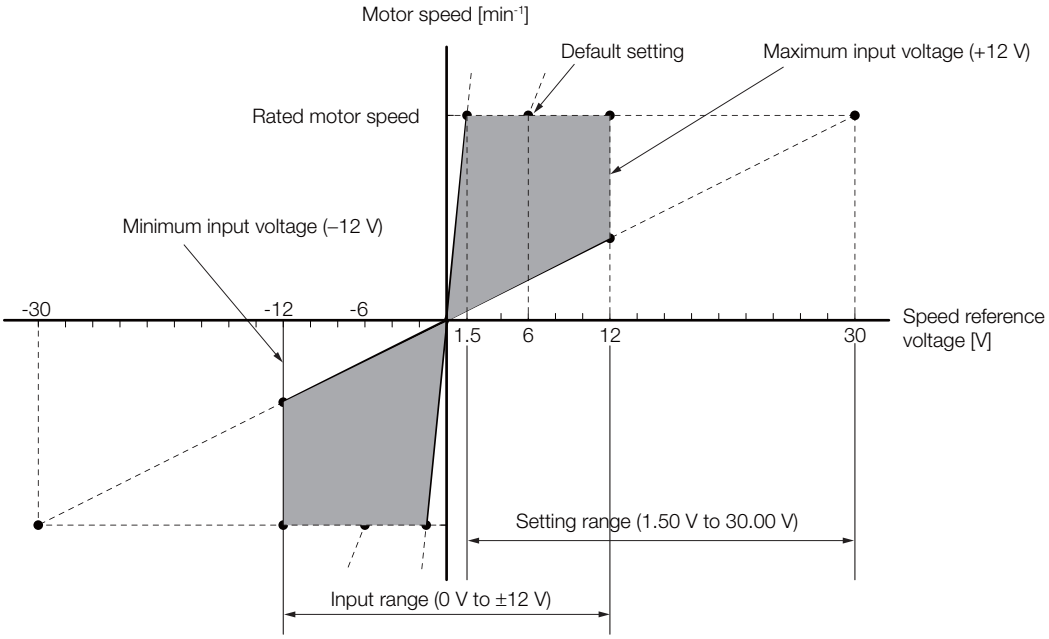

Adjusting the Speed Reference Offset

With speed control, the Servomotor may sometimes rotate at a very low speed for a speed reference of 0 V (with a reference speed of 0 or when the speed reference is stopped). This occurs because the internal reference in the SERVOPACK has a slight offset.

If the Servomotor moves at a very low speed, the offset needs to be eliminated by adjusting the offset.

You can adjust the speed reference offset either automatically or manually.

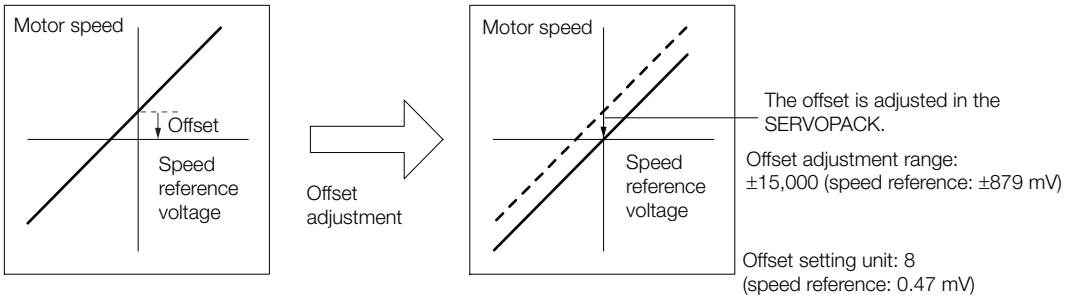

◆ Automatically Adjusting the Speed Reference Offset

To automatically adjust the speed reference offset, the amount of offset is measured and the speed reference voltage is adjusted automatically.

The measured offset is saved in the SERVOPACK.

Information The offset does not use a parameter, so it will not change even if the parameter settings are initialized.

■ Preparations

The following conditions must be met to automatically adjust the reference offset.

- The parameters must not be write prohibited.
- The servo must be OFF.
- There must not be a position loop in the host controller.

■ Applicable Tools

The following table lists the tools that you can use to automatically adjust the speed reference offset.

Tool	Fn No./Function Name	Operating Procedure Reference
Panel Operator	Fn009	☞ *13.4.8 Autotune Analog (Speed/Torque) Reference Offset (Fn009)* on page 13-18
Digital Operator	Fn009	📖 Σ-7-Series Digital Operator Operating Manual (Manual No.: SIEP S800001 33)
SigmaWin+	***Others – Adjust the Speed and Torque Reference Offset***	☞ ■ *Operating Procedure* on page 6-20

■ Operating Procedure

Use the following procedure to automatically adjust the speed reference offset.

1. Confirm that the servo is OFF in the SERVOPACK.
2. Input a 0-V reference voltage from the host controller or an external circuit.

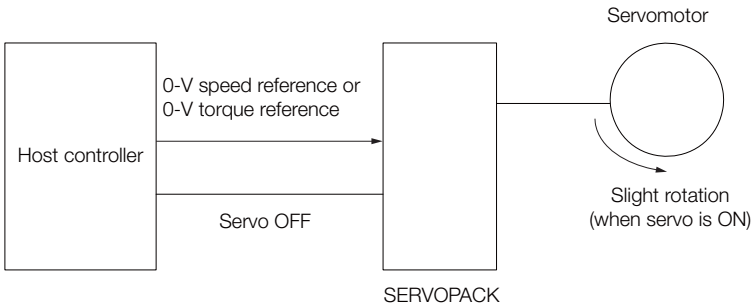

3. Click the Servo Drive Button in the workspace of the Main Window of the SigmaWin+.
4. Select **Adjust the Speed and Torque Reference Offset** in the Menu Dialog Box.
   The Adjust the Speed and Torque Reference Offset Dialog Box will be displayed.
5. Click the **Automatic Adjustment** Tab.

6. Click the **Adjust** Button.

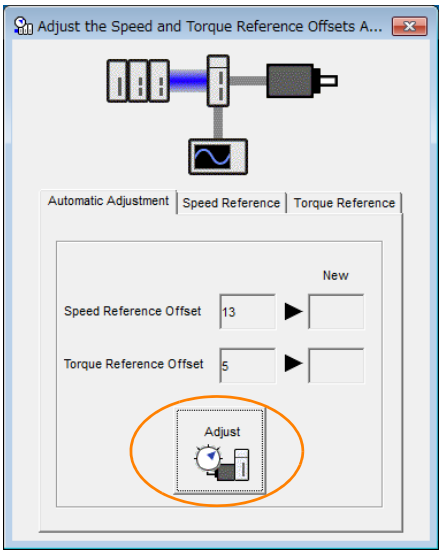

The value that results from automatic adjustment will be displayed in the **New** Box.

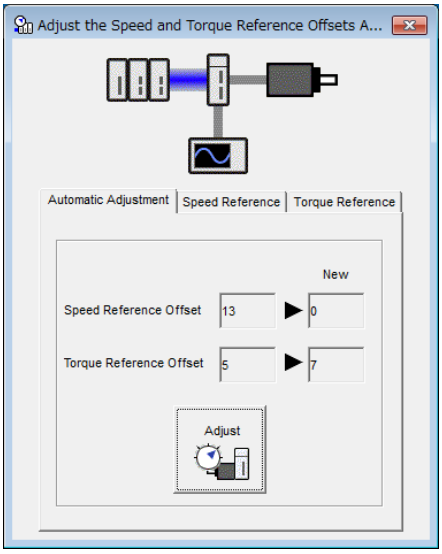

This concludes the procedure to automatically adjust the speed reference offset.

◆ Manually Adjusting the Speed Reference Offset

You can directly input a speed reference offset to adjust the speed reference. The offset is adjusted manually in the following cases.

- When a position loop is created with the host computer and the position deviation when the Servomotor is stopped by a servo lock is to be set to 0
- To intentionally set the offset to a desired value
- To check an offset that was set automatically

Information The offset does not use a parameter, so it will not change even if the parameter settings are initialized.

■ Preparations

The following conditions must be met to manually adjust the reference offset.

- The parameters must not be write prohibited.

■ Applicable Tools

The following table lists the tools that you can use to manually adjust the speed reference offset.

Tool	Fn No./Function Name	Operating Procedure Reference
Panel Operator	Fn00A	☞ *13.4.9 Manually Adjust Speed Reference Offset (Fn00A)* on page 13-18
Digital Operator	Fn00A	📖 Σ-7-Series Digital Operator Operating Manual (Manual No.: SIEP S800001 33)
SigmaWin+	***Others – Adjust the Speed and Torque Reference Offset***	☞ ■ *Operating Procedure* on page 6-22

■ Operating Procedure

Use the following procedure to manually adjust the speed reference offset.

1. Input a 0-V reference voltage from the host controller or an external circuit.

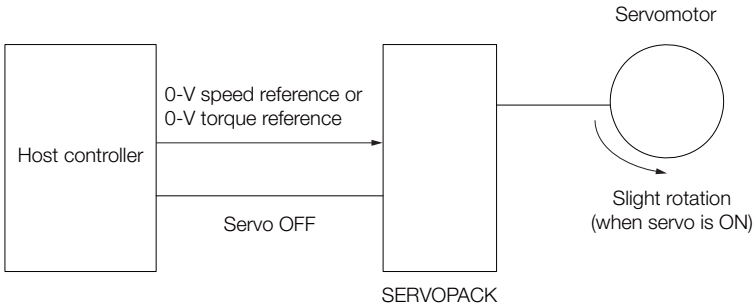

2. Click the Servo Drive Button in the workspace of the Main Window of the SigmaWin+.

3. Select **Adjust the Speed and Torque Reference Offset** in the Menu Dialog Box.
The Adjust the Speed and Torque Reference Offset Dialog Box will be displayed.

4. Click the **Speed Reference** Tab.

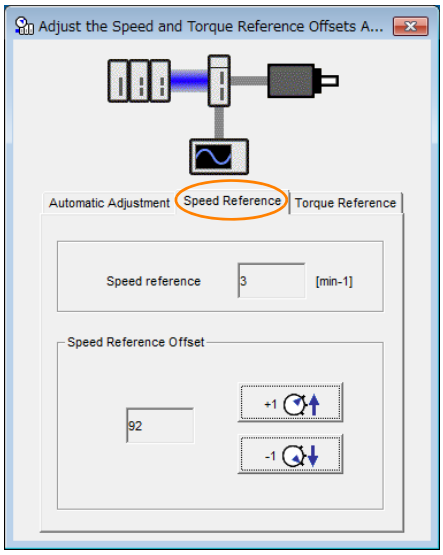

5. Use the **+1** and **-1** Buttons to adjust the value in the **Speed Reference** Box to 0.

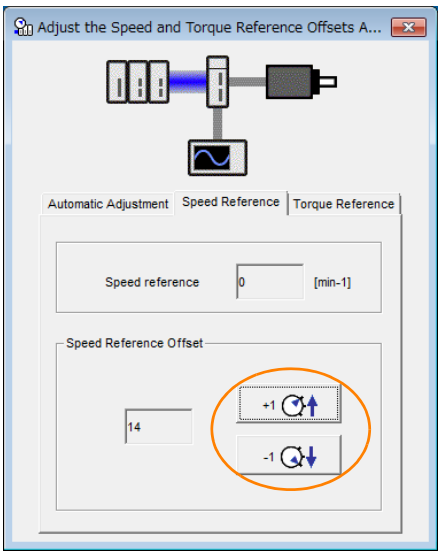

This concludes the procedure to manually adjust the speed reference offset.

6.5.2 Soft Start Settings

The soft start function takes a stepwise speed reference input and applies the specified acceleration/deceleration rates to convert it to a trapezoidal speed reference.

You specify the acceleration/deceleration rates in Pn305 (Soft Start Acceleration Time) and Pn306 (Soft Start Deceleration Time).

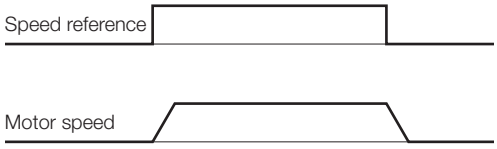

Use this function to perform smoother speed control (including internal set speed control).

Pn305	Soft Start Acceleration Time			Speed	
	Setting Range	Setting Unit	Default Setting	When Enabled	Classification
	0 to 10,000	1 ms	0	Immediately	Setup
Pn306	Soft Start Deceleration Time			Speed	
	Setting Range	Setting Unit	Default Setting	When Enabled	Classification
	0 to 10,000	1 ms	0	Immediately	Setup

Pn305: The time required for the Servomotor to accelerate from a stopped state to the maximum motor speed.

Pn306: The time required for the Servomotor to decelerate from the maximum motor speed to a stopped state.

You can calculate the actual acceleration/deceleration times with the following formulas.

$$\text{Actual acceleration time} = \frac{\text{Target speed}}{\text{Maximum speed}} \times \text{Soft start acceleration time (Pn305)}$$

$$\text{Actual deceleration time} = \frac{\text{Target speed}}{\text{Maximum speed}} \times \text{Soft start deceleration time (Pn306)}$$

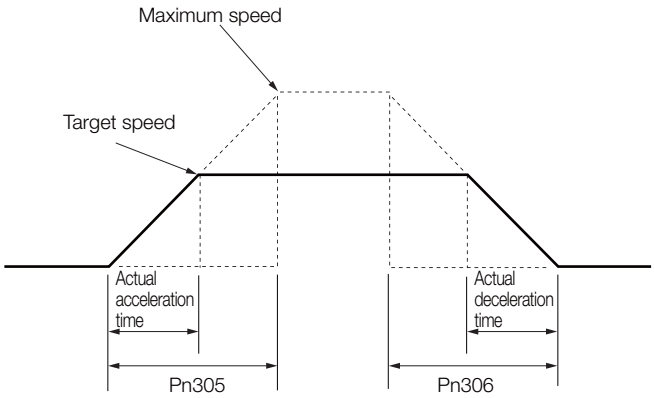

6.5.3 Speed Reference Filter

The speed reference filter is a first order lag filter that is applied to the V-REF (Speed Reference Input) signal.

You set the speed reference filter in Pn307 (Speed Reference Filter Time Constant).

It is normally not necessary to change this parameter. If the setting is too high, the response to the speed reference may be slowed down. Monitor the response to the speed reference as you set this parameter.

Pn307	Speed Reference Filter Time Constant			Speed Position	
	Setting Range	Setting Unit	Default Setting	When Enabled	Classification
	0 to 65,535	0.01 ms	40	Immediately	Setup

6.5.4 Zero Clamping

Zero clamping is used to lock the servo when the input voltage of the V-REF (Speed Reference Input) signal is equal to or lower than the speed set for the zero clamping level (Pn501 or Pn580) while the /ZCLAMP (Zero Clamping) signal is ON. The SERVOPACK internally forms a position loop, ignoring the speed reference.

Zero clamping is used for speed control in systems in which the host controller does not form a position loop.

The Servomotor is clamped within one pulse of the position where zero clamping was applied, and will return to the zero clamping position even if it is moved by an external force.

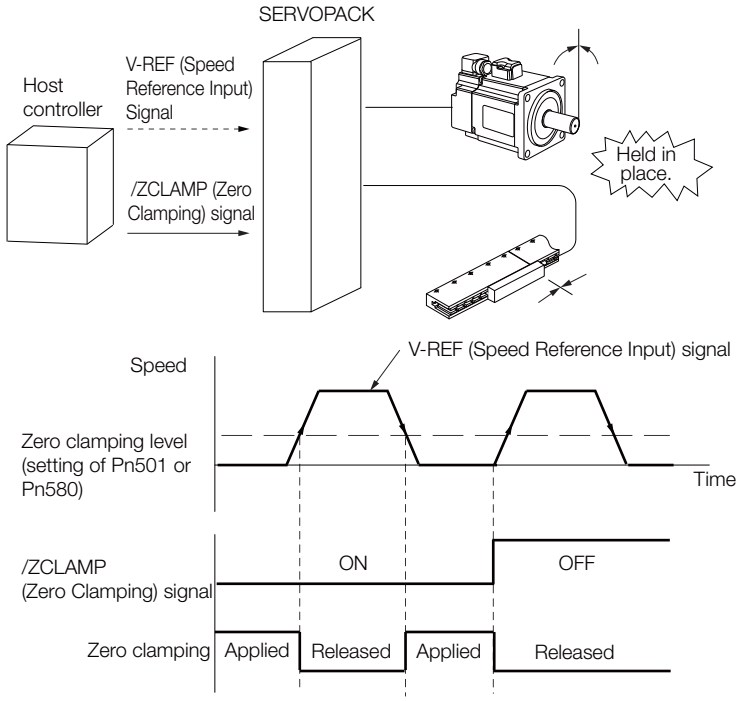

Adjust Pn102 (Position Loop Gain) if the Servomotor oscillates during zero clamping. If gain selection is used, you must also adjust Pn106 (Second Position Loop Gain).

/ZCLAMP (Zero Clamping) Signal

Use the /ZCLAMP signal to enable zero clamping.

◆ When Using the Default Input Signal Allocations (Pn50A = n.□□□0)

The /ZCLAMP signal is allocated to pin CN1-41 on the I/O signal connector by default.

Type	Signal	Connector Pin No.	Signal Status	Meaning
Input	/ZCLAMP	CN1-41	ON (closed)	Zero clamping is applied if the input voltage of the V-REF (Speed Reference Input) signal is equal to or lower than the speed set for the zero clamping level (Pn501 or Pn580).
			OFF (open)	Zero clamping is disabled.

◆ When Changing Input Signal Allocations (Pn50A = n.□□□1)

You must allocate the /ZCLAMP signal. Allocate the signal with Pn50D = n.□□□X (/ZCLAMP (Zero Clamping Input) Signal Allocation).

Refer to the following section for details.

☞ *6.1.1 Input Signal Allocations* on page 6-5

Type	Signal	Connector Pin No.	Signal Status	Meaning
Input	/ZCLAMP	Must be allocated.	ON (closed)	Zero clamping is applied if the input voltage of the V-REF (Speed Reference Input) signal is equal to or lower than the speed set for the zero clamping level (Pn501 or Pn580).
			OFF (open)	Zero clamping is disabled.

Enabling Zero Clamping

To enable using zero clamping, set the control method (Pn000 = n.□□X□) to 0, 3, 4, 5, 6, 7, 9 or A. You can use zero clamping only for operation with speed control.

If Pn000 = n.□□X□ is set to 5, 6, 7, or 9, zero clamping will be disabled when the control method is changed to any method other than speed control.

Information If you set the parameter to keep the /ZCLAMP always active (Pn50D = n.□□□7) for speed control, zero clamping will be applied whenever the speed reference is equal to or lower than the speed set for the zero clamping level. In this case, using the /ZCLAMP signal is not necessary.

Parameter		Control Method	Used Input Signals	When Enabled	Classification
Pn000	n.□□0□	Speed control	/ZCLAMP	After restart	Setup
	n.□□3□	Internal set speed control	/ZCLAMP, SPD-A, SPD-B, SPD-D		
	n.□□4□	Switching between internal set speed control and speed control with analog references	/ZCLAMP, SPD-A, SPD-B, SPD-D, C-SEL		
	n.□□5□	Switching between internal set speed control and position control	/ZCLAMP, SPD-A, SPD-B, SPD-D, C-SEL		
	n.□□6□	Switching between internal set speed control and torque control	/ZCLAMP, SPD-A, SPD-B, SPD-D, C-SEL		
	n.□□7□	Switching between position control and speed control	/ZCLAMP, C-SEL		
	n.□□9□	Switching between torque control and speed control	/ZCLAMP, C-SEL		
	n.□□A□	Switching between speed control with analog references and speed control with zero clamping	/ZCLAMP		

◆ Related Parameters

You set the speed at which to apply zero clamping as the zero clamping level (Pn501 or Pn580). If you set a value that exceeds the maximum speed of the Servomotor, the actual speed will be limited to the maximum speed of the Servomotor.

- Rotary Servomotors

Pn501	Zero Clamping Level			Speed	
	Setting Range	Setting Unit	Default Setting	When Enabled	Classification
	0 to 10,000	1 min^{-1}	10	Immediately	Setup

- Linear Servomotors

Pn580	Zero Clamping Level			Speed	
	Setting Range	Setting Unit	Default Setting	When Enabled	Classification
	0 to 10,000	1 mm/s	10	Immediately	Setup

6.5.5 /V-CMP (Speed Coincidence Detection) Signal

The /V-CMP (Speed Coincidence Output) signal is output when the Servomotor speed is the same as the reference speed. This signal is used, for example, to interlock the SERVOPACK and the host controller. You can use this output signal only during speed control.

The /V-CMP signal is described in the following table.

Type	Signal	Connector Pin No.	Signal Status	Meaning
Output	/V-CMP	CN1-25 and CN1-26 (default setting)	ON (closed)	The speed coincides.
			OFF (open)	The speed does not coincide.

Note: You can use Pn50E = n.□□X□ (/V-CMP (Speed Coincidence Detection Output) Signal Allocation) to allocate the /V-CMP signal to different output connector pins.
Refer to the following section for details on allocations.
☞ *6.1.2 Output Signal Allocations* on page 6-8

You can set the speed detection width for the /V-CMP signal in Pn503 (Speed Coincidence Detection Signal Output Width) for a Rotary Servomotor or in Pn582 (Speed Coincidence Detection Signal Output Width) for a Linear Servomotor.

- Rotary Servomotors

Pn503	Speed Coincidence Detection Signal Output Width			Speed	
	Setting Range	Setting Unit	Default Setting	When Enabled	Classification
	0 to 100	1 min^{-1}	10	Immediately	Setup

The signal is output when the difference between the reference speed and motor speed is equal or less than the setting.

Example: If Pn503 is set to 100 and the speed reference is 2,000 min^{-1}, the signal would be output when the motor speed is between 1,900 min^{-1} and 2,100 min^{-1}.

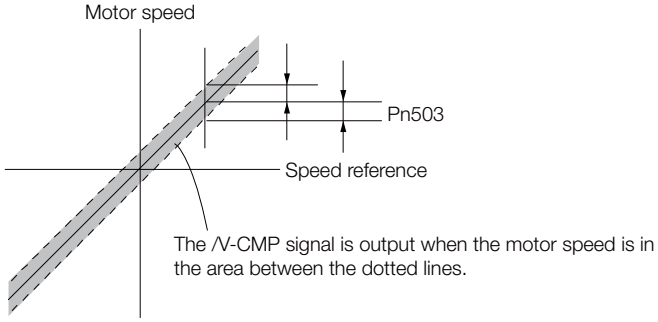

- Linear Servomotors

Pn582	Speed Coincidence Detection Signal Output Width			Speed	
	Setting Range	Setting Unit	Default Setting	When Enabled	Classification
	0 to 100	1 mm/s	10	Immediately	Setup

The signal is output when the difference between the reference speed and motor speed is equal or less than the setting.

Example: If Pn582 is set to 100 and the speed reference is 2,000 mm/s the signal would be output when the motor speed is between 1,900 mm/s and 2,100 mm/s.

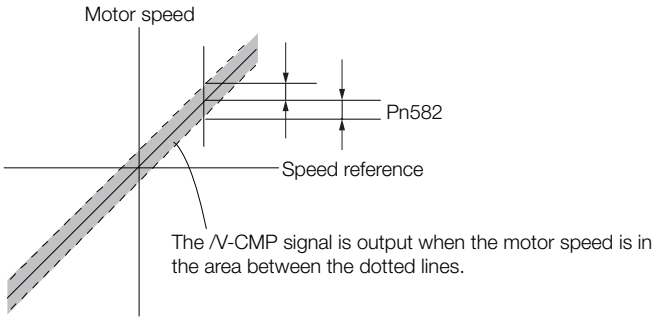

6.5.6 Operation Examples for Changing the Motor Direction

This section describes examples of using the /SPD-D (Motor Direction Input) signal in combination with zero clamping and internal set speed control.

Operation Example for Changing the Motor Direction and Zero Clamping

This section provides an example of changing the motor direction without changing the polarity of the speed reference voltage by using the /SPD-D (Motor Direction Input) signal.

/ZCLAMP	/SPD-D	Polarity of Analog Speed Reference Voltage		
		Positive	Zero Clamping Level or Lower ((Pn501 (Pn580))*	Negative
		Rotation Direction	Operating Status	Rotation Direction
OFF	OFF	CCW	Speed Control	CW
OFF	ON	CW	Speed Control	CCW
ON	OFF	CCW	Servo lock (clamped to zero)	CW
ON	ON	CW	Servo lock (clamped to zero)	CCW

* Pn501 (Zero Clamping Level): Used with a Rotary Servomotor.
  Pn580 (Zero Clamping Level): Used with a Linear Servomotor.

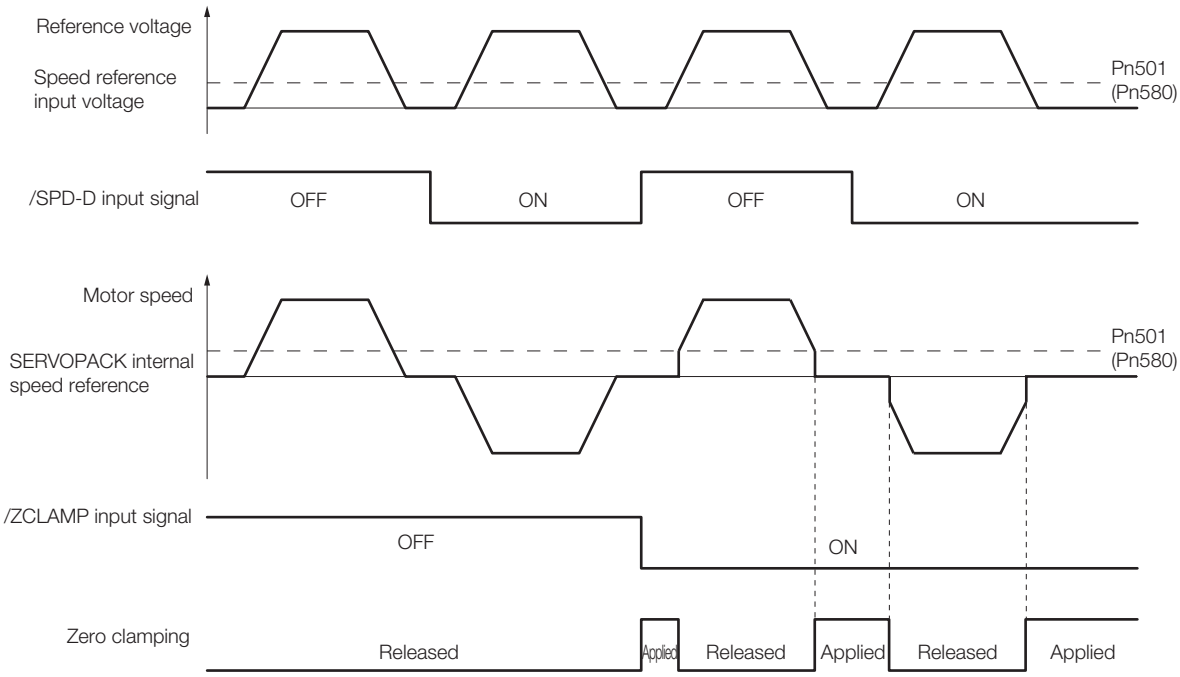

Note: The soft start function is used for the acceleration/deceleration time of the speed reference.

Operation Example for Changing the Motor Direction and Internal Set Speed Control

Even with a speed reference with the same polarity, you can change the Servomotor direction and stop the Servomotor by changing the control mode to internal set speed control and combining the /SPD-D (Motor Direction Input) signal and /C-SEL (Control Selection Input) signal.

The following operation example combines internal set speed control, the /SPD-D signal, and the /C-SEL signal. For this example, the internal set speeds must be set to 0.

◆ Parameter Settings

You must make the following parameter settings to combine internal set speed control, the /SPD-D signal, and the /C-SEL signal.

- Set Pn000 = n.□□X□ (Control Method Selection) to 4 (Switching between internal set speed control and speed control).
- Set Pn305 (Soft Start Acceleration Time) to the required acceleration time.
- Set Pn306 (Soft Start Deceleration Time) to the required deceleration time.
- Set Pn50A = n.□□□X (Input Signal Allocation Mode) to 1 (Change the sequence input signal allocations).
- Set Pn50C = n.□□□X (/SPD-D (Motor Direction) Signal Allocation) to any setting other than 7 (the signal is always active) or 8 (the signal is always inactive).
- Set Pn50C = n.□□X□ (/SPD-A (Internal Set Speed Selection Input) Signal Allocation) to 8 (the signal is always inactive).
- Set Pn50C = n.□X□□ (/SPD-B (Internal Set Speed Selection Input) Signal Allocation) to 8 (the signal is always inactive).
- Set Pn50C = n.X□□□ (/C-SEL (Control Selection Input) Signal Allocation) to any setting other than 7 (the signal is always active) or 8 (the signal is always inactive).

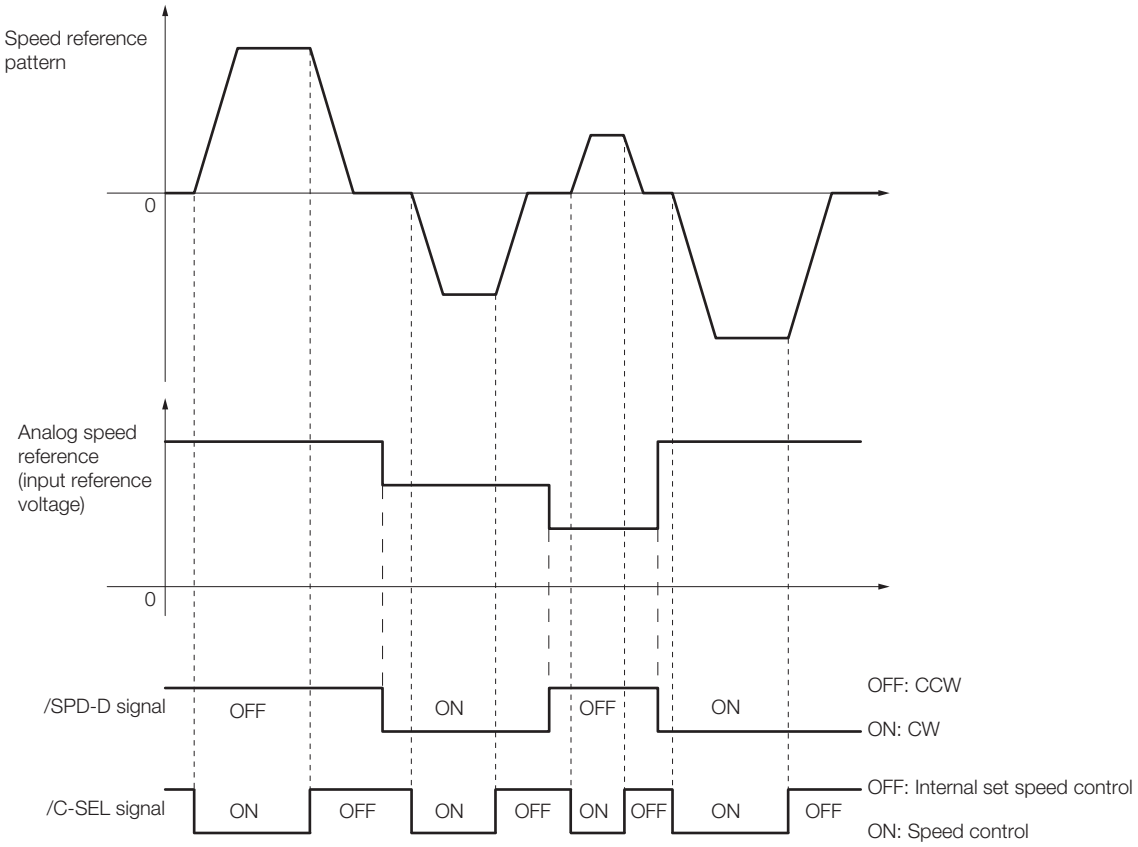

6.6 Position Control

Position control is used to input a pulse train reference from the host controller to the SERVOPACK to move to a target position. The position is controlled with the number of input pulses, and the speed is controlled with the input pulse frequency. Use position control when positioning is required.

You set the control method to position control in Pn000 = n.□□X□ (Control Method Selection).

Parameter		Meaning	When Enabled	Classification
Pn000	n.□□1□	Position Control	After restart	Setup

The control block diagrams for position control are provided below.

- Rotary Servomotors

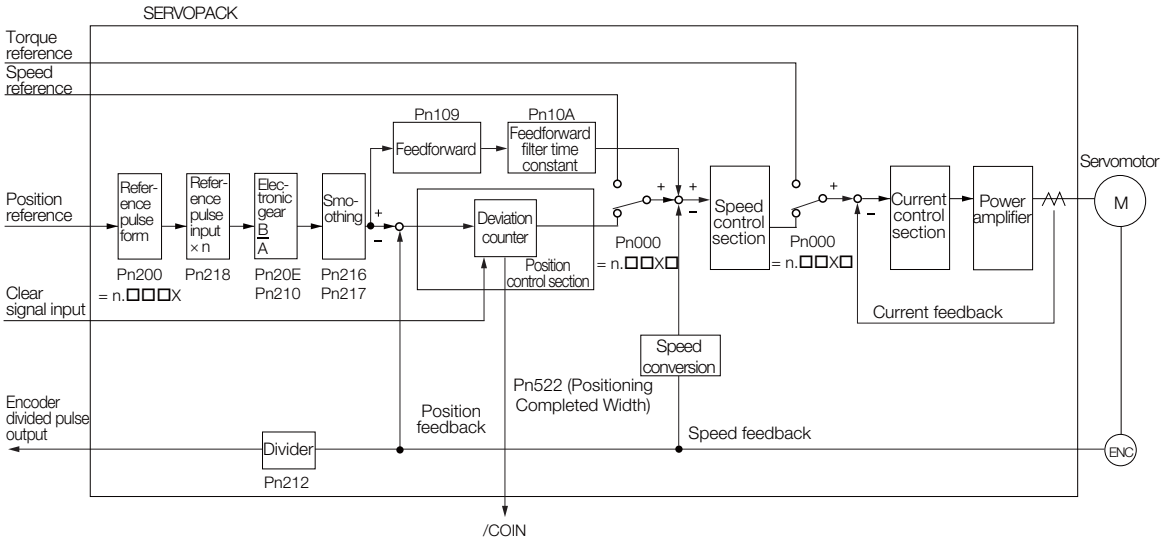

- Linear Servomotors

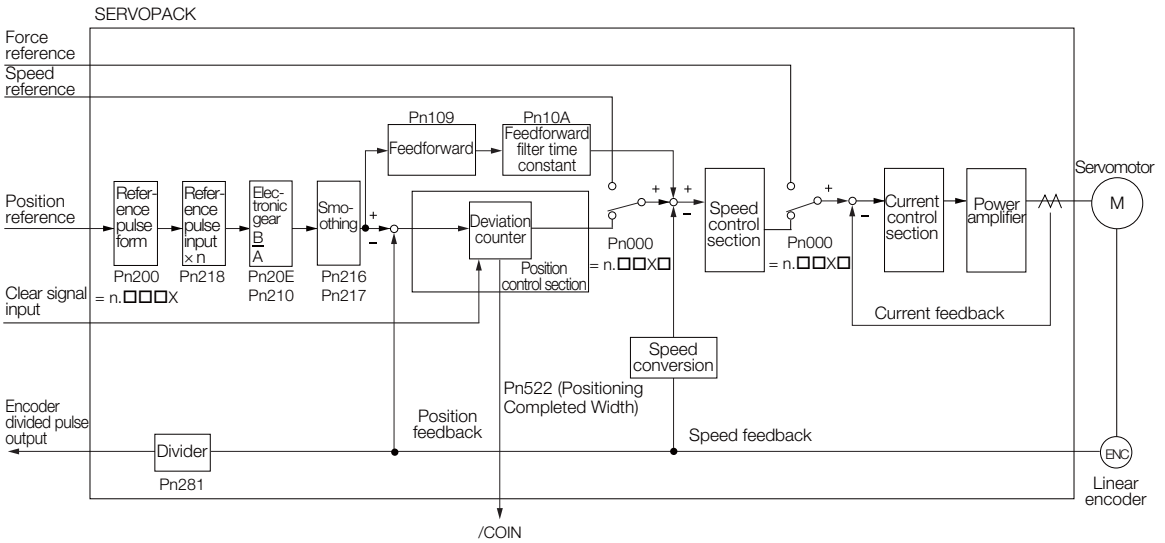

6.6.1 Basic Settings for Position Control

This section describes the reference pulse forms and input filters.

Reference Pulse Forms

To perform speed control, you must specify how the reference is input from the host controller (i.e., the reference pulse form). You set the reference pulse form in Pn200 (Position Control Reference Form Selections).

Parameter		Reference Pulse Form	Input Pulse Multiplier	Forward Reference	Reverse Reference
Pn200	n.□□□0 (default setting)	Sign and pulse train, positive logic.	–	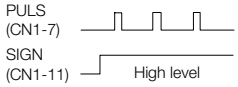	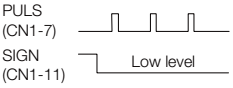
	n.□□□1	CW and CCW pulse trains, positive logic	–	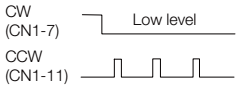	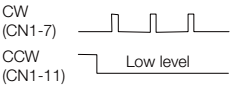
	n.□□□2	90° phase-differential pulses	×1	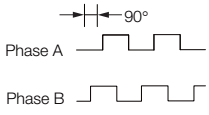	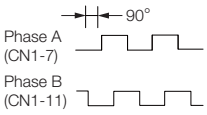
	n.□□□3		×2		
	n.□□□4		×4		
	n.□□□5	Sign and pulse train, negative logic.	–	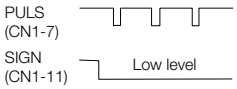	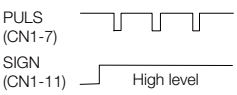
	n.□□□6	CW and CCW pulse trains, negative logic	–	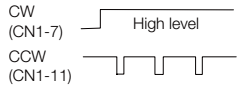	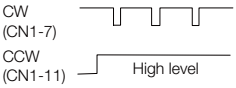

Selecting an Input Filter

Parameter		Meaning	When Enabled	Classification
Pn200	n.0□□□ (default setting)	Use the reference input filter 1 for a line-driver signal. (1 Mpps max.)	After restart	Setup
	n.1□□□	Use the reference input filter for an open-collector signal. (200 kpps max.)		
	n.2□□□	Use reference input filter 2 for a line-driver signal. (1 to 4 Mpps)		

Electrical Specifications for Pulse Train Reference

The following table describes the forms for pulse train references.

Pulse Train Reference Form	Electrical Specifications		Remarks
Sign and pulse train (SIGN and PLUS signals) Maximum reference frequency: 4 Mpps (maximum reference frequency for open-collector output: 200 kpps)	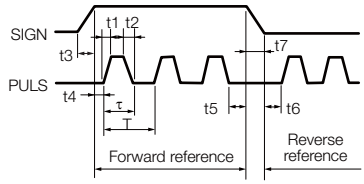	t1, t2, t3, t7 ≤ 0.025 μs t4, t5, t6 ≥ 0.5 μs τ ≥ 0.125 μs T-τ ≥ 0.125 μs	SIGN is high for a forward reference and low for a reverse reference.
CW and CCW pulse trains Maximum reference frequency: 4 Mpps (maximum reference frequency for open-collector output: 200 kpps)	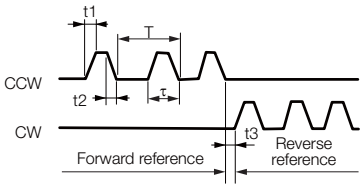	t1, t2 ≤ 0.025 μs t3 ≥ 0.5 μs τ ≥ 0.125 μs T-τ ≥ 0.125 μs	–
Two-phase pulse trains with 90° phase differential (phases A and B) Maximum reference frequency: 1 Mpps* (maximum reference frequency for open-collector output: 200 kpps)	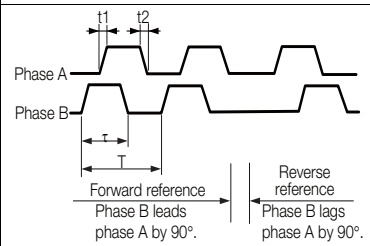	t1 ≤ 0.1 μs t2 ≤ 0.1 μs τ ≥ 0.5 μs T-τ ≥ 0.5 μs	–

* The maximum reference frequency for the multipliers before multiplication are as follows:
×1 multiplier: 1 Mpps
×2 multiplier: 1 Mpps
×4 multiplier: 1 Mpps

Timing Example for Pulse Train References

The following example shows the timing of inputting the pulse train reference after the servo turns ON when a signal and pulse train are used.

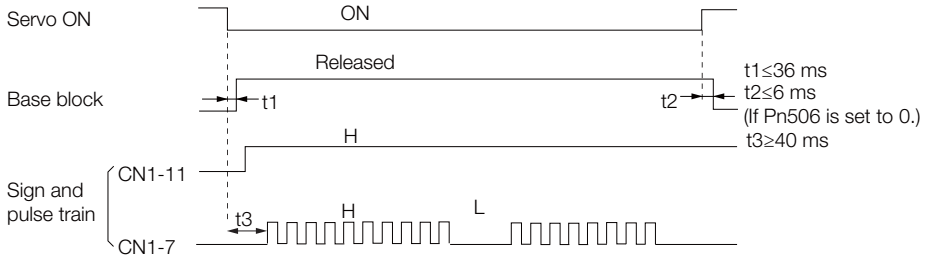

The interval (t3) between when the servo is turned ON until the pulse train reference is input must be at least 40 ms. If the reference is input in less than 40 ms, the reference pulses may not be received by the SERVOPACK.

6.6.2 CLR (Position Deviation Clear) Signal Function and Settings

The CLR (Position Deviation Clear) signal is used to clear the deviation counter in the SERVOPACK.
As long as the CLR signal is ON, the deviation counter will be 0, so a position loop will not be formed.

Term

Deviation counter
The deviation counter counts the deviation between the reference input pulses and the feedback pulses from the encoder (i.e., the accumulated pulses).

CLR (Position Deviation Clear) Signal

Type	Signal	Connector Pin No.	Name
Input	CLR	CN1-15	Position deviation clear input
	/CLR	CN1-14	

Setting the Form of the CLR (Position Deviation Clear) Signal

You set the CLR signal form to use to clear the deviation counter in Pn200 = n.□□X□ (Clear Signal Form).

Parameter		Reference Form	Clear Timing	When Enabled	Classification
Pn200	n.□□0□ (default setting)	Clear position deviation when the signal is at high level.	CLR (CN1-15) ON Cleared.	After restart	Setup
	n.□□1□	Clear position deviation on the rising edge of the signal.	CLR (CN1-15) ON Cleared here just once.		
	n.□□2□	Clear position deviation when the signal is at low level.	CLR (CN1-15) OFF Cleared.		
	n.□□3□	Clear position deviation on the falling edge of the signal.	CLR (CN1-15) OFF Cleared here just once.		

Information
The pulse width of the CLR signal must meet the following condition.
- If Pn200 = n.□□X□ is set to 0 or 2, the width of the CLR signal must be at least 250 μs to reset the deviation counter.
- If Pn200 = n.□□X□ is set to 1 or 3, the width of the CLR signal must be at least 20 μs to reset the deviation counter.

Setting the Clear Operation (Pn200 = n.□X□□)

This parameter determines when the position error should be set to zero according to the condition of the SERVOPACK. Set Pn200 = n.□X□□ (Clear Operation).

Parameter		Meaning	When Enabled	Classification
Pn200	n.□0□□ (default setting)	Clear position deviation at a base block (at servo OFF or when alarm occurs).	After restart	Setup
	n.□1□□	Do not clear position deviation. The position deviation is cleared only with CLR (Clear Position Deviation) signal.		
	n.□2□□	Clear position deviation when an alarm occurs.		

6.6.3 Reference Pulse Input Multiplication Switching

You can switch the input multiplier for the position reference pulses with the /PSEL (Reference Pulse Input Multiplication Switch) signal. The number of reference pulses input to the SERVOPACK is multiplied by the reference pulse input multiplier. You can change the multiplier from 1 to a specified value n (n can be up to 100). You set the multiplier in Pn218 (Reference Pulse Input Multiplier).

You can confirm if the multiplier was changed with the /PSELA (Reference Pulse Input Multiplication Switching Output) signal.

This section describes the /PSEL (Reference Pulse Input Multiplication Switch) signal, the reference pulse input multiplier, and restrictions.

/PSEL (Reference Pulse Input Multiplication Switch) Signal

Use the /PSEL signal to change to the reference pulse input multiplier that is set in Pn218 (Reference Pulse Input Multiplier).

Type	Signal	Connector Pin No.	Signal Status	Meaning
Input	/PSEL	Must be allocated.	ON (closed)	Enables the reference pulse input multiplier.
			OFF (open)	Disables the reference pulse input multiplier. The multiplier will be 1.

Note: You must allocate the /PSEL signal to use it. You can use the following parameters to allocate the signal to a terminal.
- Pn50A = n.□□□1 (Change the sequence input signal allocations.)
- Pn515 = n.□□X□ (/PSEL (Reference Pulse Input Multiplication Switching Input) Signal Allocation)

Refer to the following section for details.
☞ *6.1.1 Input Signal Allocations* on page 6-5

/PSELA (Reference Pulse Input Multiplication Switching Output) Signal

You can confirm if the reference pulse input multiplier was changed with the /PSELA (Reference Pulse Input Multiplication Switching Output) signal.

Type	Signal	Connector Pin No.	Signal Status	Meaning
Output	/PSELA	Must be allocated.	ON (closed)	The reference pulse input multiplier was enabled.
			OFF (open)	The reference pulse input multiplier was disabled.

Note: You must allocate the /PSELA signal to use it. You can use Pn510 = n.□X□□ (/PSELA (Reference Pulse Input Multiplication Switching Output) Signal Allocation) to allocate the signal to a terminal. Refer to the following section for details.
☞ *6.1.2 Output Signal Allocations* on page 6-8

⚠ CAUTION

- Always use the /PSELA signal to confirm that the reference pulse input multiplier has been switched and make sure that there are no position reference pulses before you input a position reference.
  Unexpected operation may occur if position reference pulses are input before the reference pulse input multiplier changes.

Setting the Reference Pulse Input Multiplier (Pn218)

Pn218	Reference Pulse Input Multiplier				Position
	Setting Range	Setting Unit	Default Setting	When Enabled	Classification
	1 to 100	×1	1	Immediately	Setup

A timing chart for switching the reference pulse input multiplier is provided below.

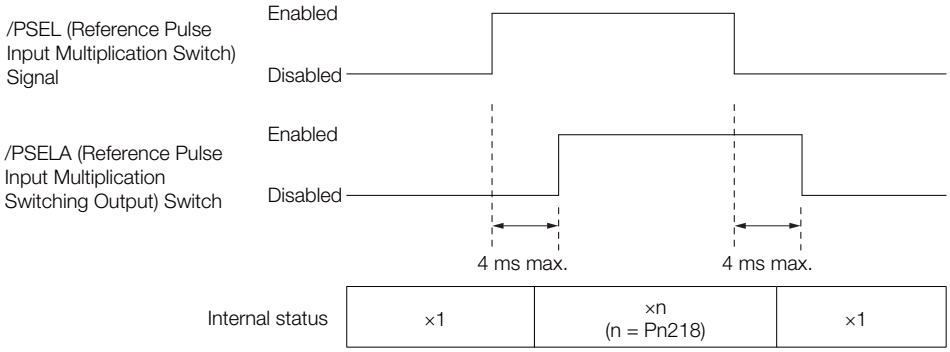

⚠ CAUTION

- If you change the reference pulse input multiplier (Pn218), perform trial operation of the Servomotor without the machine coupled to the Servomotor shaft to confirm that no problems will occur in operation before you couple the Servomotor to the machine.

Restrictions

The reference pulse input multiplier will not change during the following operations regardless of the status of the /PSEL signal.

- Program jogging
- Autotuning without a reference input

6.6.4 Smoothing Settings

Smoothing allows you to apply a filter to the position reference to produce smoother Servomotor operation. Smoothing is effective in the following cases.

- When the host controller that outputs the references cannot perform acceleration or deceleration
- When the reference pulse frequency is very low

Note: Smoothing does not affect the travel distance (i.e., the number of reference pulses).

The following parameters are related to smoothing.
Change the settings while there is no reference pulse input and the Servomotor is stopped.

Pn216	Position Reference Acceleration/Deceleration Time Constant				Position
	Setting Range	Setting Unit	Default Setting	When Enabled	Classification
	0 to 65,535	0.1 ms	0*	Immediately after the motor stops	Setup
Pn217	Average Position Reference Movement Time				Position
	Setting Range	Setting Unit	Default Setting	When Enabled	Classification
	0 to 10,000	0.1 ms	0*	Immediately after the motor stops	Setup

* The filter is disabled if you set the parameter to 0

Information Changes to the settings in Pn216 or Pn217 are not applied while the Servomotor is operating. The changes will be enabled the next time the Servomotor comes to a stop.

Restrictions

The limit value of the acceleration/deceleration filter is affected by the maximum motor speed and encoder resolution.

The Σ-7 Servomotor is subject to the following time constant restrictions.

Servomotor Model	Encoder Resolution [bit]	Maximum Motor Speed [min^{-1}]	Time Constant [ms]
SGM7M	20	7000	No limit
SGM7J	24	6000	640
SGM7A	24	6000	640
SGM7P	24	6000	640
SGM7G	24	3000	1280
SGM7E	24	500	No limit
SGM7F	24	600	6400
SGMCV	22	600	No limit
SGMCS	20	500	No limit

The difference between the position reference acceleration/deceleration time constant (Pn216) and the average position reference movement time (Pn217) is shown below.

Position Reference Acceleration/Deceleration Filter	Average Position Reference Movement Filter
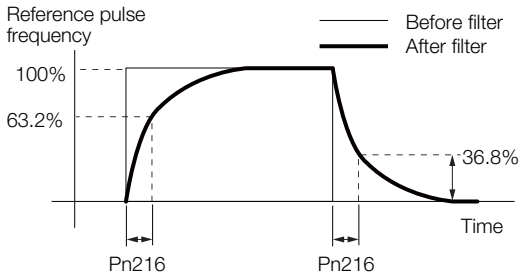	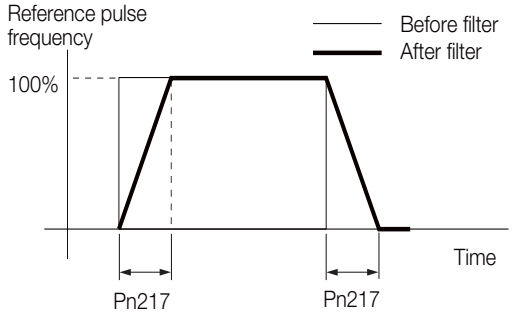
–	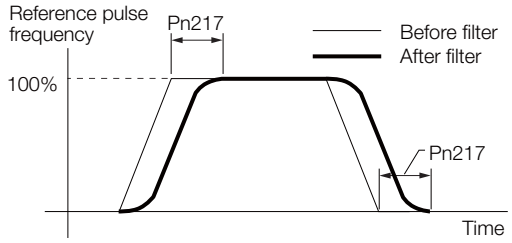

6.6.5 /COIN (Positioning Completion) Signal

The /COIN (Positioning Completion) signal indicates that Servomotor positioning has been completed during position control.

The /COIN signal is output when the difference between the reference position output by the host controller and the current position of the Servomotor (i.e., the position deviation as given by the value of the deviation counter) is equal to or less than the setting of the positioning completed width (Pn522).

Use this signal to check the completion of positioning from the host controller.

Type	Signal	Connector Pin No.	Signal Status	Meaning
Output	/COIN	CN1-25 and CN1-26 (default setting)	ON (closed)	Positioning has been completed.
			OFF (open)	Positioning has not been completed.

Note: Use Pn50E = n.□□□X (/COIN (Positioning Completion Output) Signal Allocation) to allocate the /COIN signal to other connector pins. Refer to the following section for details.
☞ *6.1.2 Output Signal Allocations* on page 6-8

Setting the Positioning Completed Width

The /COIN signal is output when the difference between the reference position and the current position (i.e., the position deviation as given by the value of the deviation counter) is equal to or less than the setting of the positioning completed width (Pn522).

Pn522	Positioning Completed Width				Position
	Setting Range	Setting Unit	Default Setting	When Enabled	Classification
	0 to 1,073,741,824	1 reference unit	7	Immediately	Setup

The setting of the positioning completed width has no effect on final positioning accuracy.

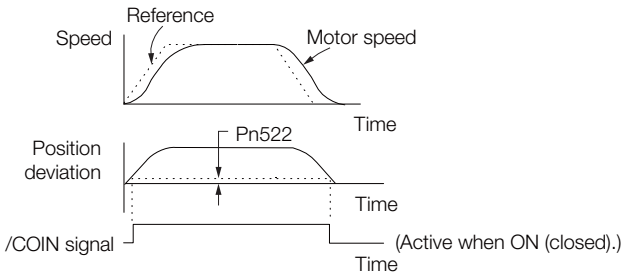

Note: If the parameter is set to a value that is too large, the /COIN signal may be output when the position deviation is low during a low-speed operation. If that occurs, reduce the setting until the signal is no longer output.

Setting the Output Timing of the /COIN (Positioning Completion Output) Signal

You can add a reference input condition to the output conditions for the /COIN signal to change the signal output timing.

If the position deviation is always low and a narrow positioning completed width is used, change the setting of Pn207 = n.X□□□ (/COIN (Positioning Completion Output) Signal Output Timing) to change output timing for the /COIN signal.

Parameter		Description	When Enabled	Classification
Pn207	n.0□□□ (default setting)	Output the /COIN signal when the absolute value of the position deviation is the same or less than the setting of Pn522 (Positioning Completed Width).	After restart	Setup
	n. 1□□□	Output the /COIN signal when the absolute value of the position deviation is the same or less than the setting of Pn522 (Positioning Completed Width) and the reference after the position reference filter is 0.		
	n. 2□□□	Output the /COIN signal when the absolute value of the position deviation is the same or less than the setting of Pn522 (Positioning Completed Width) and the reference input is 0.		

6.6.6 /NEAR (Near) Signal

The /NEAR (Near) signal indicates when positioning completion is being approached.

The host controller receives the NEAR signal before it receives the /COIN (Positioning Completion) signal, it can start preparations for the operating sequence to use after positioning has been completed. This allows you to reduce the time required for operation when positioning is completed.

The NEAR signal is generally used in combination with the /COIN signal.

Type	Signal	Connector Pin No.	Signal Status	Meaning
Output	/NEAR	Must be allocated.	ON (closed)	The Servomotor has reached a point near to positioning completion.
			OFF (open)	The Servomotor has not reached a point near to positioning completion.

Note: You must allocate the /NEAR signal to use it. Use Pn510 = n.□□□X (/NEAR (Near) Signal Allocation) to allocate the signal to a connector pin. Refer to the following section for details.
☞ *6.1.2 Output Signal Allocations* on page 6-8

/NEAR (Near) Signal Setting

You set the condition for outputting the /NEAR (Near) signal (i.e., the near signal width) in Pn524 (Near Signal Width). The /NEAR signal is output when the difference between the reference position and the current position (i.e., the position deviation as given by the value of the deviation counter) is equal to or less than the setting of the near signal width (Pn524).

Pn524	Near Signal Width			Position	
	Setting Range	Setting Unit	Default Setting	When Enabled	Classification
	1 to 1,073,741,824	1 reference unit	1,073,741,824	Immediately	Setup

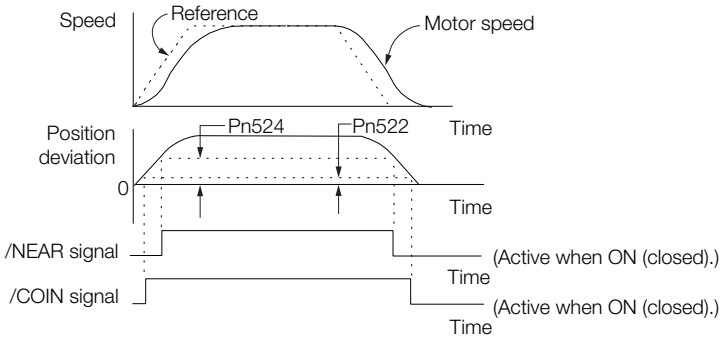

Note: Normally, set Pn524 to a value that is larger than the setting of Pn522 (Positioning Completed Width).

6.6.7 Reference Pulse Inhibition Function

You can stop the SERVOPACK from counting the reference input pulses during position control. When this function is enabled, the SERVOPACK will ignore the reference pulse input.

/INHIBIT (Reference Pulse Inhibit) Signal

If you set the control method to switch between normal position control and position control with reference pulse inhibition (Pn000 = n.□□B□), the /INHIBIT signal is used as the Reference Pulse Inhibit signal (default setting).

◆ When Using the Default Input Signal Allocations (Pn50A = n.□□□0)

Type	Signal	Connector Pin No.	Signal Status	Meaning
Input	/INHIBIT	CN1-41 (default setting)	ON (closed)	Counting the reference pulses is stopped.
			OFF (open)	The reference pulses are counted.

◆ When Changing Input Signal Allocations (Pn50A = n.□□□1)

If you set Pn000 = n.□□X□ (Control Method Selection) to 1, 5, 7, 8, or B, the /INHIBIT signal is used as the Reference Pulse Inhibit signal for reference pulse inhibition.

Type	Signal	Connector Pin No.	Signal Status	Meaning
Input	/INHIBIT	Must be allocated.	ON (closed)	Counting the reference pulses is stopped.
			OFF (open)	The reference pulses are counted.

Note: You must allocate the /INHIBIT signal to use it. Use Pn50D = n.□□X□ (/INHIBIT (Reference Pulse Inhibit Input) Signal Allocation) to allocate the signal to a connector pin. Refer to the following section for details.
☞ *6.1.2 Output Signal Allocations* on page 6-8

◆ Reference Pulse Inhibition Settings

To use reference pulse inhibition, set Pn000 = n.□□X□ (Control Method Selection) to 1, 5, 7, 8, or B.

Parameter		Control Method	Used Input Signals	When Enabled	Classification
Pn000	n.□□1□	Position control	/INHIBIT	After restart	Setup
	n.□□5□	Switching between internal set speed control and position control	/INHIBIT /SPD-A /SPD-B /SPD-D /C-SEL		
	n.□□7□	Switching between position control and speed control	/INHIBIT /C-SEL		
	n.□□8□	Switching between position control and torque control	/INHIBIT /C-SEL		
	n.□□B□	Switching between normal position control and position control with reference pulse inhibition	/INHIBIT		

Information Counting reference pulses can be inhibited only for position control.

6.7 Torque Control

Torque control is performed by inputting a torque reference with an analog voltage reference to the SERVOPACK to control the Servomotor with a torque that is proportional to the input voltage.

Torque control is set by setting Pn000 = n.□□X□ (Control Method Selection) to 2 (Torque control).

Parameter		Meaning	When Enabled	Classification
Pn000	n.□□2□	Torque control	After restart	Setup

6.7.1 Basic Settings for Torque Control

This section describes the torque reference input signal and torque reference input gain.

T-REF (Torque Reference Input) Signal

The T-REF signal is described in the following table.

Type	Signal	Connector Pin No.	Name
Input	T-REF	CN1-9	Torque reference input
	SG	CN1-10	Signal ground for torque reference input

Maximum input voltage: ±12 VDC

Example

Input Circuit Example

Pn400 (Torque Reference Input Gain) is set to 3 (setting unit: V) by default.

Torque Reference Input	Rotation Direction	Torque
+3 V	Forward	Rated torque
+1 V	Forward	1/3 rated torque
–1.5 V	Reverse	1/2 rated torque

If you will use a host controller, such as a programmable controller, for torque control, connect the above output pins to the analog reference output terminals on the host controller . Always use twisted-pair cables to control noise.

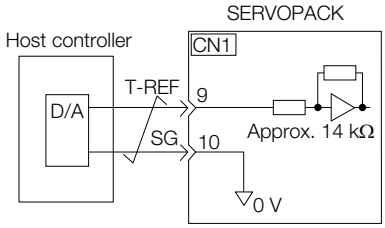

Setting the Torque Reference Input Gain (Pn400)

The torque of the Servomotor is controlled in proportion to an analog voltage reference.

The reference voltage for the rated motor torque is set in Pn400 (Torque Reference Input Gain) to define the relationship between the analog voltage reference and the motor output torque.

Pn400	Torque Reference Input Gain			Speed Position Torque	
	Setting Range	Setting Unit	Default Setting	When Enabled	Classification
	10 to 100	0.1 V	30 (rated torque at 3.0 V)	Immediately	Setup

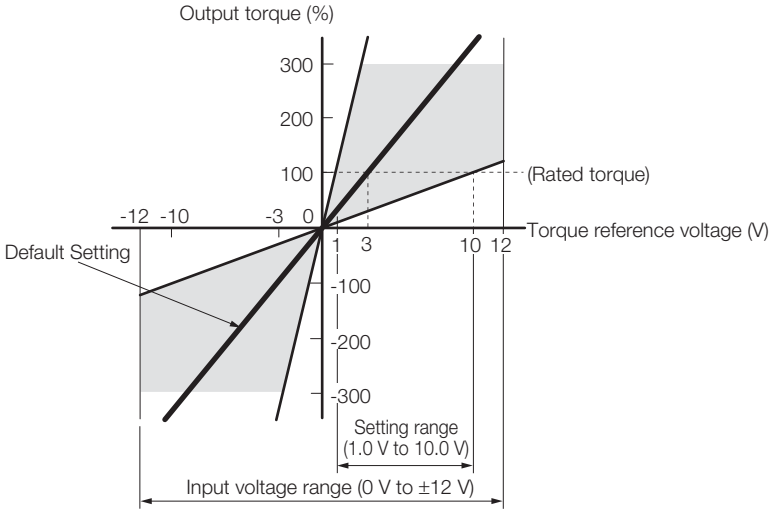

Note: You can input a torque reference that exceeds the rated torque, but A.710 (Instantaneous Overload) or A.720 (Continuous Overload) alarms may occur if the reference is maintained for a long time or the motor outputs a torque that exceeds the rated torque. Refer to the following section for details.
☞ *12.2.2 Troubleshooting Alarms* on page 12-12

6.7.2 Adjusting the Torque Reference Offset

With torque control, the Servomotor may sometimes operate at a very low speed for a torque reference of 0 V. This occurs because the internal reference in the SERVOPACK has a slight offset of a few millivolts.

If the Servomotor moves at a very low speed, the offset needs to be eliminated by adjusting the offset.

You can adjust the torque reference offset either automatically or manually.

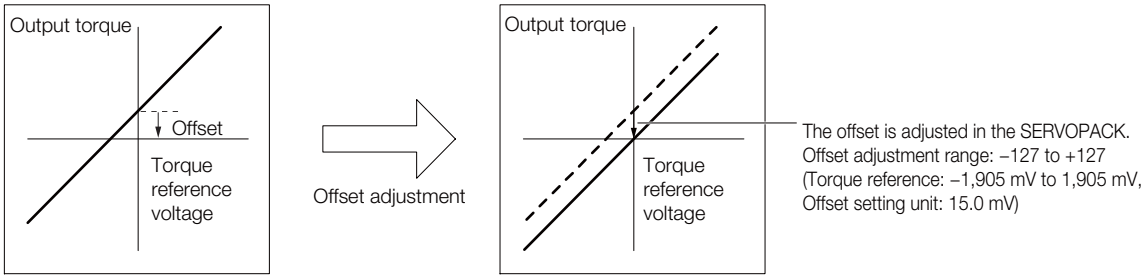

Automatically Adjusting the Torque Reference Offset

To automatically adjust the torque reference offset, the amount of offset is measured and the torque reference voltage is adjusted automatically.
The measured offset is saved in the SERVOPACK.

Information The offset does not use a parameter, so it will not change even if the parameter settings are initialized.

◆ Preparations

The following conditions must be met to automatically adjust the reference offset.

- The parameters must not be write prohibited.
- The servo must be OFF.
- There must not be a position loop or speed loop in the host controller.

◆ Applicable Tools

The following table lists the tools that you can use to automatically adjust the torque reference offset.

Tool	Fn No./Function Name	Operating Procedure Reference
Panel Operator	Fn009	☞ *13.4.8 Autotune Analog (Speed/Torque) Reference Offset (Fn009)* on page 13-18
Digital Operator	Fn009	📖 Σ-7-Series Digital Operator Operating Manual (Manual No.: SIEP S800001 33)
SigmaWin+	***Others – Adjust the Speed and Torque Reference Offset***	☞ ◆ *Operating Procedure* on page 6-42

◆ Operating Procedure

Use the following procedure to automatically adjust the torque reference offset.

1. Confirm that the servo is OFF in the SERVOPACK.
2. Input a 0-V reference voltage from the host controller or an external circuit.

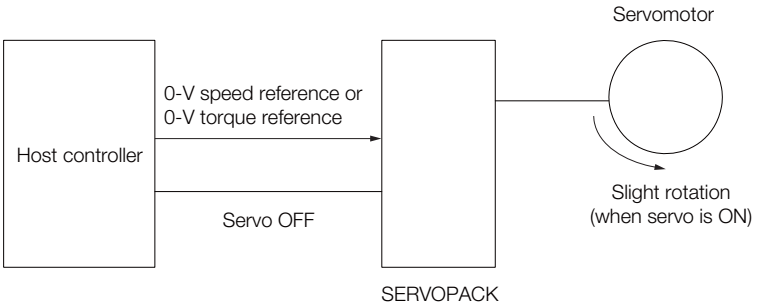

3. Click the Servo Drive Button in the workspace of the Main Window of the SigmaWin+.
4. Select **Adjust the Speed and Torque Reference Offset** in the Menu Dialog Box.
   The Adjust the Speed and Torque Reference Offset Dialog Box will be displayed.
5. Click the **Automatic Adjustment** Tab.

6. Click the **Adjust** Button.

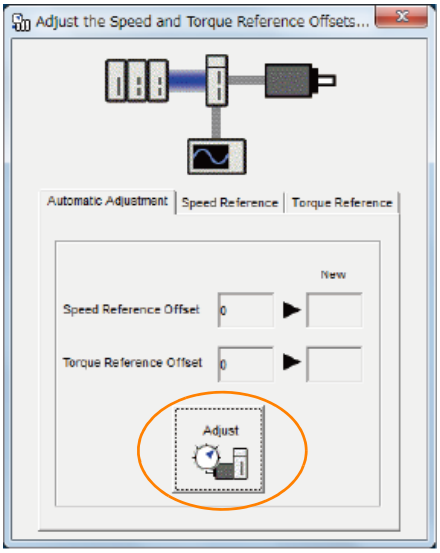

The value that results from automatic adjustment will be displayed in the **New** Box.

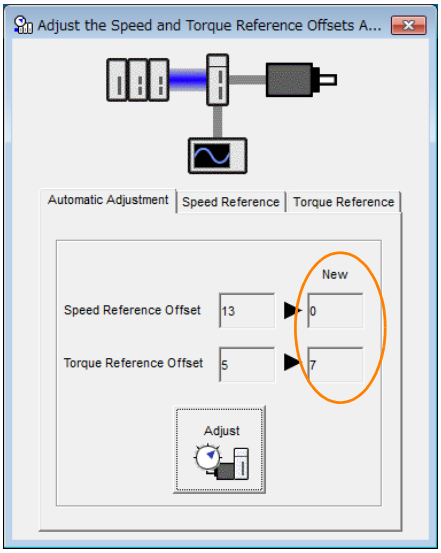

Note: You cannot automatically adjust the reference offset if a position loop is created with the host controller. Manually adjust the torque reference offset.

This concludes the procedure to automatically adjust the torque reference offset.

Manually Adjusting the Torque Reference Offset

You can directly input a torque reference offset to adjust the torque reference. The offset is adjusted manually in the following cases.

- To intentionally set the offset to a desired value
- To check an offset that was set automatically

Information The offset does not use a parameter, so it will not change even if the parameter settings are initialized.

◆ Preparations

The following conditions must be met to manually adjust the reference offset.

- The parameters must not be write prohibited.

◆ Applicable Tools

The following table lists the tools that you can use to manually adjust the torque reference offset.

Tool	Fn No./Function Name	Operating Procedure Reference
Panel Operator	Fn009	☞ *13.4.10 Manually Adjust Torque Reference Offset (Fn00B)* on page 13-19
Digital Operator	Fn009	📖 Σ-7-Series Digital Operator Operating Manual (Manual No.: SIEP S800001 33)
SigmaWin+	***Others – Adjust the Speed and Torque Reference Offset***	☞ ◆ *Operating Procedure* on page 6-44

◆ Operating Procedure

Use the following procedure to manually adjust the torque reference offset.

1. Input a 0-V reference voltage from the host controller or an external circuit.

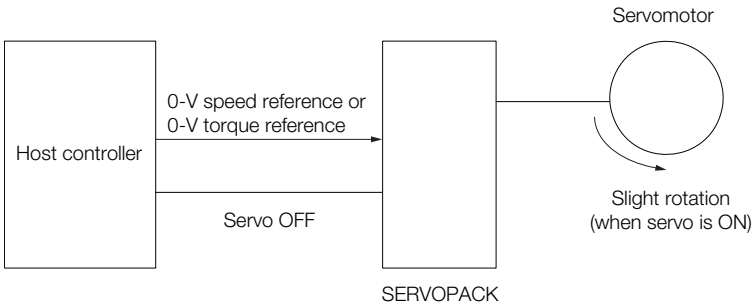

2. Click the Servo Drive Button in the workspace of the Main Window of the SigmaWin+.

3. Select **Adjust the Speed and Torque Reference Offset** in the Menu Dialog Box.
The Adjust the Speed and Torque Reference Offset Dialog Box will be displayed.

4. Click the **Torque Reference** Tab.

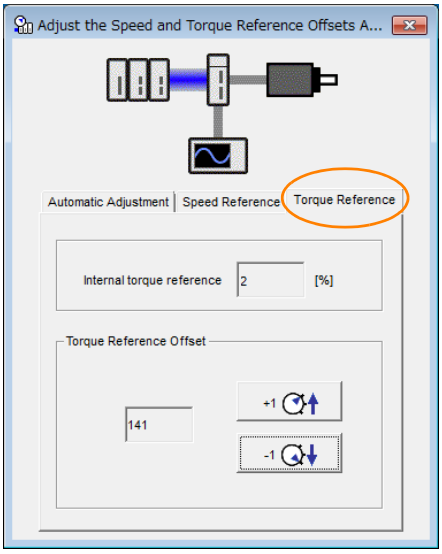

5. Use the **+1** and **-1** Buttons to adjust the value in the **Torque Reference** Box to 0.

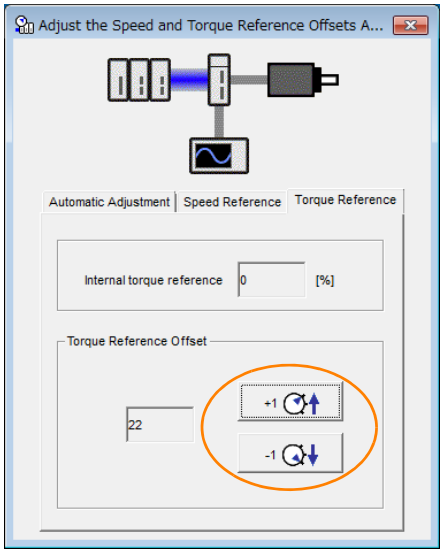

This concludes the procedure to manually adjust the torque reference offset.

6.7.3 Torque Reference Filter Settings

The torque reference filter is a first order lag filter that is applied to the T-REF (Torque Reference Input) signal. The torque reference input filter is set in Pn415 (T-REF Filter Time Constant).

If the setting is too high, the response to the torque reference may be slowed down. Monitor the response as you set this parameter.

Pn415	T-REF Filter Time Constant			Speed / Position / Torque	
	Setting Range	Setting Unit	Default Setting	When Enabled	Classification
	0 to 65,535	0.01 ms	0	Immediately	Setup

6.7.4 Speed Limit during Torque Control

You can limit the speed of the Servomotor to protect the machine.

When you use a Servomotor for torque control, the Servomotor is controlled to output the specified torque, but the motor speed is not controlled. Therefore, if a reference torque is input that is larger than the machine torque, the speed of the Servomotor may increase greatly. If that may occur, use this function to limit the speed.

Note: The actual limit of Servomotor speed depends on the load conditions on the Servomotor.

With No Speed Limit	With a Speed Limit
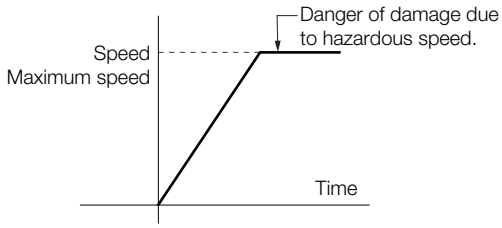	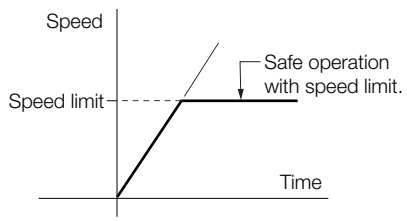

/VLT (Speed Limit Detection) Signal

The signal that is output when the motor speed is being limited by the speed limit is described in the following table.

Type	Signal	Connector Pin No.	Signal Status	Meaning
Output	/VLT	Must be allocated.	ON (closed)	The Servomotor speed is being limited.
			OFF (open)	The Servomotor speed is not being limited.

Note: You must allocate the /VLT signal to use it. Use Pn50F = n.□□X□ (/VLT (Speed Limit Detection) Signal Allocation) to allocate the signal to a connector pin. Refer to the following section for details.
☞ *6.1.2 Output Signal Allocations* on page 6-8

Selecting the Speed Limit

You set the speed limit to use in Pn002 = n.□□X□ (Torque Control Option). If you set Pn.002 to n.□□1□ (Use V-REF as an external speed limit input), the smaller of the external speed limit and the internal speed limit will be used.

Parameter		Meaning	When Enabled	Classification
Pn002	n.□□0□ (default setting)	Use Pn407 or Pn480 as the speed limit. (Use internal speed limiting.)	After restart	Setup
	n.□□1□	Use V-REF (CN1-5 and CN1-6) as an external speed limit input signal and limit the speed with the V-REF input voltage and the setting of Pn300. (Use external speed limiting.)		

Note: If you are using a Rotary Servomotor, set Pn407 (Speed Limit during Torque Control). If you are using a Linear Servomotor, set Pn480 (Speed Limit during Force Control).

◆ Internal Speed Limiting

If you select internal speed limiting for the torque control option (Pn002 = n.□□0□), set the speed limit for the motor in Pn407 (Speed Limit during Torque Control) or Pn480 (Speed Limit during Force Control).

Also set Pn408 = n.□□X□ (Speed Limit Selection) to specify using the maximum motor speed or the overspeed alarm detection speed as the speed limit. Select the overspeed alarm detection speed to limit the speed to the equivalent of the maximum motor speed.

Parameter		Meaning	When Enabled	Classification
Pn408	n.□□0□ (default setting)	Use the smaller of the maximum motor speed and the setting of Pn407 or Pn480 as the speed limit.	After restart	Setup
	n.□□1□	Use the smaller of the overspeed alarm detection speed and the setting of Pn407 or Pn480 as the speed limit.		

Note: If you are using a Rotary Servomotor, set Pn407 (Speed Limit during Torque Control). If you are using a Linear Servomotor, set Pn480 (Speed Limit during Force Control).

- Rotary Servomotors

Pn407	Speed Limit during Torque Control				Torque
	Setting Range	Setting Unit	Default Setting	When Enabled	Classification
	0 to 10,000	1 min^{-1}	10000	Immediately	Setup

- Linear Servomotors

Pn480	Speed Limit during Force Control				Force
	Setting Range	Setting Unit	Default Setting	When Enabled	Classification
	0 to 10,000	1 mm/s	10000	Immediately	Setup

Note: If the parameter setting exceeds the maximum speed of the Servomotor, the Servomotor's maximum speed or the overspeed alarm detection speed will be used.

◆ External Speed Limiting

If you select external speed limiting for the torque control option (Pn002 = n.□□1□), set the V-REF (Speed Reference Input) signal and the speed reference input gain (Pn300).

Type	Signal	Connector Pin No.	Name
Input	V-REF	CN1-5	External speed limit input
	SG	CN1-6	Signal ground for external speed limit input

During torque control, the motor speed limit is controlled by the analog voltage reference.

Information

1. If you set Pn002 to n.□□1□, the smaller of the speed limit input with the V-REF signal and the value of Pn407 or Pn480 is used.
2. The setting of Pn300 determines the voltage level to be input as the speed limit. The polarity has no effect.
3. If you set Pn300 to 6.00 (default setting) and 6 V is input to the V-REF (CN1-5 and CN1-6) signal, the speed is limited to the rated speed of the Servomotor.

Pn300	Speed Reference Input Gain			Speed Position Torque	
	Setting Range	Setting Unit	Default Setting	When Enabled	Classification
	150 to 3,000	0.01 V	600	Immediately	Setup

6.8 Encoder Divided Pulse Output

The encoder divided pulse output is a signal that is output from the encoder and processed inside the SERVOPACK. It is then output externally in the form of two phase pulse signals (phases A and B) with a 90° phase differential. At the host controller, it is used as the position feedback.

The following table describes the signals and output phase forms.

6.8.1 Encoder Divided Pulse Output Signals

Type	Signal	Connector Pin No.	Name	Remarks
Output	PAO	CN1-33	Encoder Divided Pulse Output, Phase A	• Rotary Servomotors These encoder divided pulse output pins output the number of pulses per Servomotor resolution that is set in Pn212 (Number of Encoder Output Pulses). The phase difference between phase A and phase B is an electric angle of 90°. • Linear Servomotors These encoder divided pulse output pins output pulses at the resolution that is set in Pn281 (Encoder Output Resolution). The phase difference between phase A and phase B is an electric angle of 90°.
	/PAO	CN1-34		
	PBO	CN1-35	Encoder Divided Pulse Output, Phase B	
	/PBO	CN1-36		
	PCO	CN1-19	Encoder Divided Pulse Output, Phase C*	These pins output one pulse every Servomotor rotation.
	/PCO	CN1-20		

* Refer to the following section for information on the origin within one encoder rotation.

☞ ◆ *Relation between Renishaw PLC Incremental Linear Encoders and Encoder Output Pulse Signal from the SERVOPACK When Using a RGS20 Scale and RGH22B Sensor Head* on page 6-49

• Rotary Servomotor

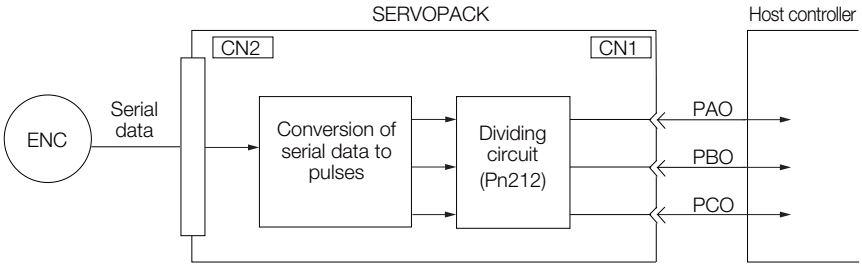

• Linear Servomotors

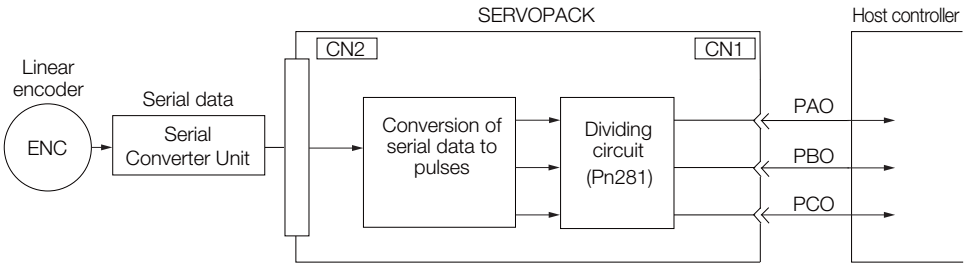

Output Phase Forms

Forward rotation or movement (phase B leads by 90°)	Reverse rotation or movement (phase A leads by 90°)
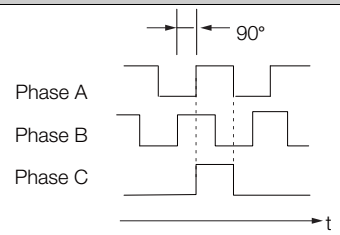	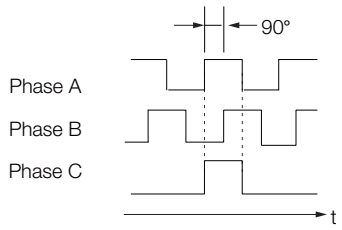

Note: The pulse width of the origin within one encoder rotation depends on the setting of number of encoder output pulses (Pn212) or the encoder output resolution (Pn281). It is the same as the width of phase A.
Even for reverse operation (Pn000 = n.□□□1), the output phase form is the same as shown above.

> **Important**
> If you use the SERVOPACK's phase-C pulse output for an origin return, rotate the Servomotor two or more rotations before you start an origin return. If the Servomotor cannot be rotated two or more times, perform an origin return operation at a motor speed of 600 min^{-1} or lower. If the motor speed is higher than 600 min^{-1}, the phase-C pulse may not be output correctly.

Linear Encoder Application Precautions

The following precautions apply to the encoder output pulses when an external linear encoder is used.

◆ Relation between Renishaw PLC Incremental Linear Encoders and Encoder Output Pulse Signal from the SERVOPACK When Using a RGS20 Scale and RGH22B Sensor Head

The output position of the origin signal (Ref) will depend on the direction of movement for some models of incremental linear encoders from Renishaw PLC.

In that case, the phase-C pulse of the SERVOPACK is output at two positions.

For detailed specifications on the origin signal, refer to the manual for the Renishaw PLC incremental linear encoder.

■ When Passing the First Origin Signal (Ref) in the Forward Direction and Returning after Turning ON the Power Supply

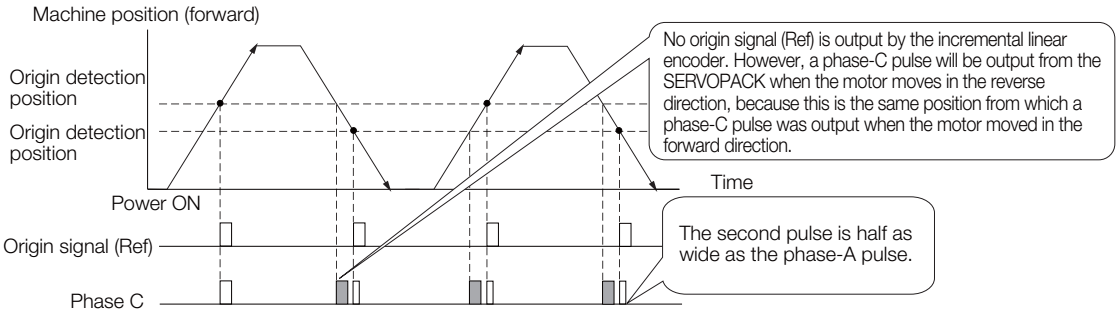

■ When Passing the First Origin Signal (Ref) in the Reverse Direction and Returning after Turning ON the Power Supply

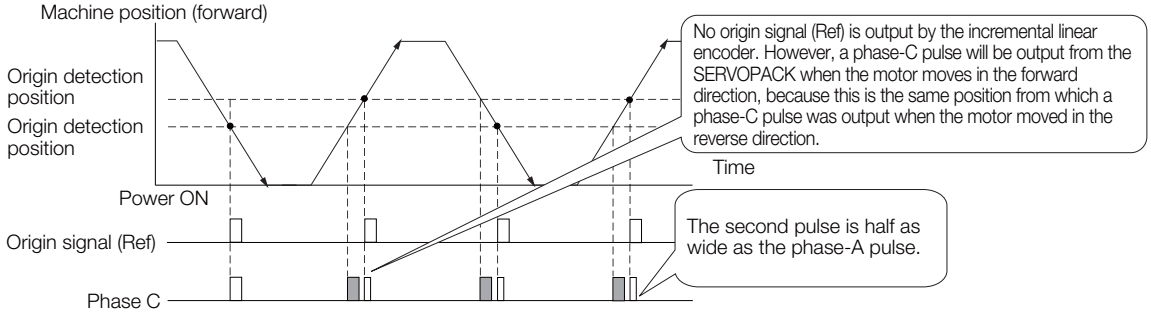

◆ Precautions When Using a Linear Incremental Encoder from Magnescale Co., Ltd.

■ Encoder Divided Phase-C Pulse Output Selection

You can also output the encoder's phase-C pulse for reverse movement. To do so, set Pn081 to n.□□□1.

Parameter		Meaning	When Enabled	Classification
Pn081	n.□□□0 (default setting)	Output phase-C pulses only in the forward direction.	After restart	Setup
	n.□□□1	Output phase-C pulses in both the forward and reverse directions.		

Important

Precautions on Setting the Phase-C Pulse Output Selection (Pn081 = n.□□□X)

- If you set Pn081 to n.□□□1 (Output phase-C pulses in both the forward and reverse directions), the width of the phase-C pulse output may be narrower than the width of the phase-A pulse.
- There is a difference of 1/8th of the scale pitch in the phase-C detection position for the encoder's phase-C pulse output position between when Pn081 = n.□□□X is set to 0 (Output phase-C pulses only in the forward direction) and when it is set to 1 (Output phase-C pulses in both the forward and reverse directions).

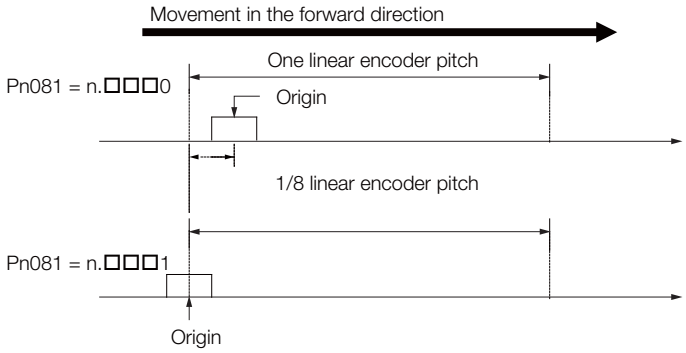

Observe the following precaution if you set Pn081 to n.□□□0 (Output phase-C pulses only in the forward direction).

When a linear incremental encoder from Magnescale Co., Ltd. is used, the count direction of the encoder determines how the phase-C pulse (CN1-19 and CN1-20) is output.

Note: The count direction (up or down) of the linear encoder determines whether a phase-C pulse is output. The output of the pulse does not depend on the setting of the movement direction (Pn000 = n.□□□1).

Encoder Model	Interpolator	Linear Encoder Pitch [μm]
SL710	PL101-RY MJ620-T13	800
SL720		800
SL730		800
SR75		80
SR85		80
SQ10	MQ10-FLA	400
	MQ10-GLA	

■ When First Passing the Origin Signal in the Forward Direction and Returning after Turning ON the Power Supply

The encoder's phase-C pulse (CN1-19 and CN1-20) is output when the origin detection position is passed for the first time in the forward direction after the power supply is turned ON. After that, the phase-C pulse is output whenever the origin detection position is passed in the forward or reverse direction.

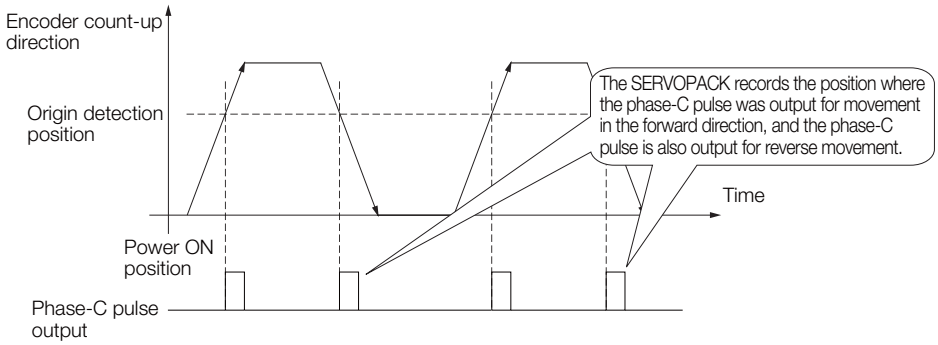

■ When First Passing the Origin Signal in the Reverse Direction and Returning after Turning ON the Power Supply

The encoder's phase-C pulse (CN1-19 and CN1-20) is not output when the origin detection position is passed for the first time in the reverse direction after the power supply is turned ON.

However, after the origin detection position is passed in the forward direction and the encoder's phase-C pulse is output, it will then also be output when the origin detection point is passed in the reverse direction.

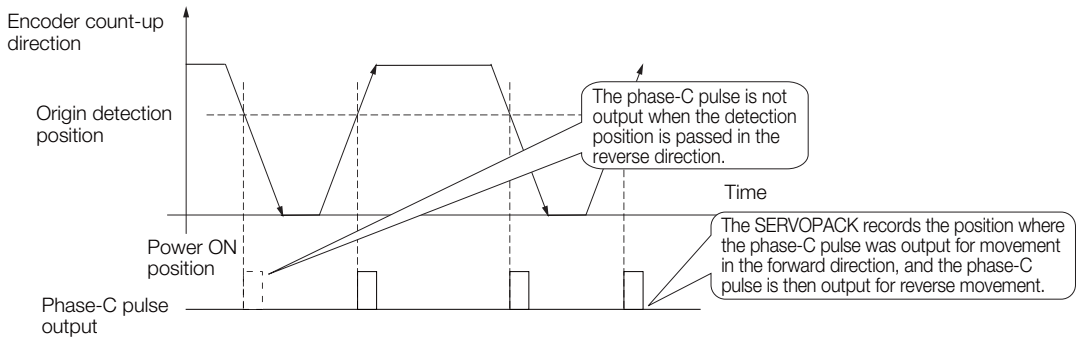

■ When Using a Linear Encoder with Multiple Origins and First Passing the Origin Position in the Forward Direction and Returning after Turning ON the Power Supply

The encoder's phase-C pulse is output when the origin detection position is passed for the first time in the forward direction after the power supply is turned ON. After that, the phase-C pulse is output whenever the origin detection position is passed in the forward or reverse direction.

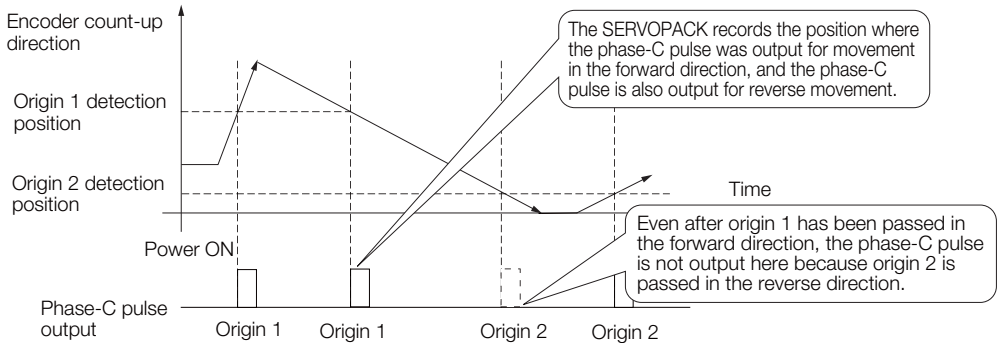

■ When Using a Linear Encoder with Multiple Origins and First Passing the Origin Position in the Reverse Direction after Turning ON the Power Supply

The encoder's phase-C pulse is not output when the origin detection position is passed for the first time in the reverse direction after the power supply is turned ON.
However, after the origin detection position is passed in the forward direction and the encoder's phase-C pulse it output, it will then also be output when the origin detection point is passed in the reverse direction.

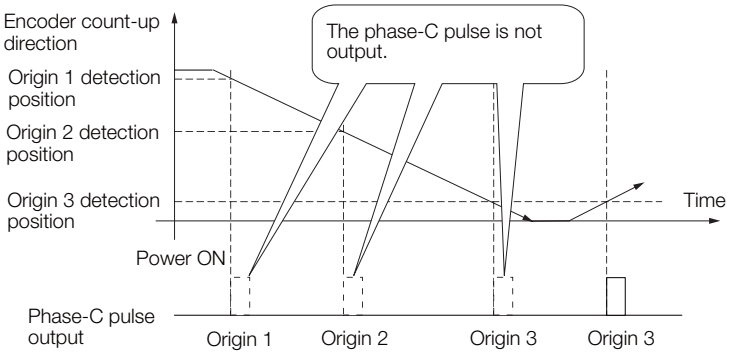

6.8.2 Setting for the Encoder Divided Pulse Output

This section describes the setting for the encoder divided pulse output for a Rotary Servomotor or Linear Servomotor.

Encoder Divided Pulse Output When Using a Rotary Servomotor

If you will use a Rotary Servomotor, set the number of encoder output pulses (Pn212).

Pn212	Number of Encoder Output Pulses			Speed Position Torque	
	Setting Range	Setting Unit	Default Setting	When Enabled	Classification
	16 to 1,073,741,824	1 P/Rev	2,048	After restart	Setup

The number of pulses from the encoder per rotation are processed inside the SERVOPACK, divided by the setting of Pn212, and then output.

Set the number of encoder divided output pulses according to the system specifications of the machine or host controller.

The setting of the number of encoder output pulses is limited by the resolution of the encoder.

Setting of the Number of Encoder Output Pulses [P/Rev]	Setting Increment	Encoder Resolution			Upper Limit of Servomotor Speed for Set Number of Encoder Output Pulses [min^{-1}]
		20 bits (1,048,576 pulses)	22 bits (4,194,304 pulses)	24 bits (16,777,216 pulses)	
16 to 16,384	1	○	○	○	6,000
16,386 to 32,768	2	○	○	○	3,000
32,772 to 65,536	4	○	○	○	1,500
65,544 to 131,072	8	○	○	○	750
131,088 to 262,144	16	○	○	○	375
262,176 to 524,288	32	–	○	○	187
524,352 to 1,048,576	64	–	○	○	93
1,048,704 to 2,097,152	128	–	–	○*	46
2,097,408 to 4,194,304	256	–	–	○*	23

* Available only for incremental encoder

Note: 1. The setting range of the number of encoder output pulses (Pn212) depends on the resolution of the Servomotor encoder. An A.041 alarm (Encoder Output Pulse Setting Error) will occur if the above setting conditions are not met.
Correct setting example: Pn212 can be set to 25,000 [P/Rev].
Incorrect setting example: Pn212 cannot be set to 25,001 (P/Rev) because the setting increment in the above table is not used.

2. The upper limit of the pulse frequency is approximately 1.6 Mpps. The Servomotor speed will be limited if the setting of the number of encoder output pulses is too high.
An A.511 alarm (Encoder Output Pulse Overspeed) will occur if the upper limit of the motor speed is exceeded.

Output example: An output example is given below for the PAO (Encoder Pulse Output Phase A) signal and the PBO (Encoder Pulse Output Phase B) signal when Pn212 is set to 16 (16 pulses output per revolution).

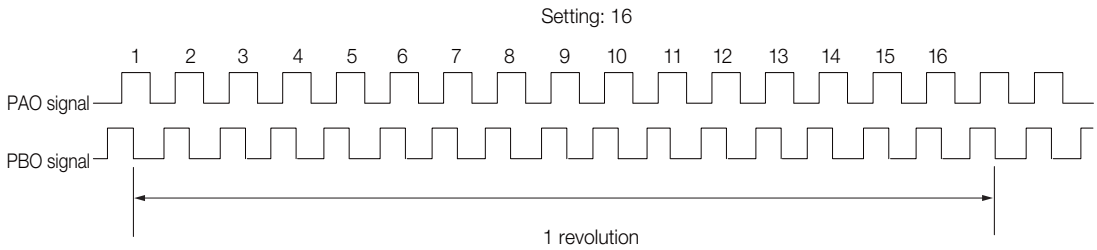

Encoder Divided Pulse Output When Using a Linear Servomotor

If you will use a Linear Servomotor, set the encoder output resolution (Pn281).

Pn281	Encoder Output Resolution			Speed Position Force	
	Setting Range	Setting Unit	Default Setting	When Enabled	Classification
	1 to 4,096	1 edge/pitch	20	After restart	Setup

Note: 1. The maximum setting for the encoder output resolution is 4,096.
If the resolution of the external encoder exceeds 4,096, pulse output will no longer be possible at the resolution given in ■ *Feedback Resolution of Linear Encoder* on page 5-49.
2. If the setting of Pn281 exceeds the resolution of the external encoder, the A.041 alarm (Encoder Output Pulse Setting Error) will be output.

Set the encoder output resolution for the encoder pulse output signals (PAO, /PAO, PBO, and /PBO) from the SERVOPACK to the host controller.

The number of feedback pulses per linear encoder pitch is divided by the setting of Pn281 (after multiplication by 4) inside the SERVOPACK and then the resulting number of pulses is output. Set the parameter according to the system specifications of the machine or host controller.

The setting range depends on the Servomotor's maximum speed (Pn385) and the Linear Encoder Scale Pitch (Pn282).* You can calculate the upper limit of the setting of Pn281 with the following formula.

$$\text{Upper limit of Pn281} = \frac{\text{Linear Encoder Pitch*/100}}{\text{Pn385}} \times 72$$

* The value depends on whether a Serial Converter Unit is used.

Using a Serial Converter Unit	Setting of Pn282
Not Using a Serial Converter Unit (when the linear encoder and SERVOPACK are connected directly or when a linear encoder that does not require a Serial Converter Unit is used)	The linear encoder pitch is automatically detected by the SERVOPACK, so the setting of Pn282 is disabled.

Information

When the linear encoder pitch is 4 μm, the maximum motor speed is limited to 1 m/s because of the maximum response frequency of the Serial Converter Unit.
If the setting is out of range or does not satisfy the setting conditions, an A.041 alarm (Encoder Output Pulse Setting Error) will be output. If the motor speed exceeds the upper limit for the set encoder output resolution, an A.511 alarm (Encoder Output Pulse Overspeed) will be output.
The upper limit of the encoder output resolution is restricted by the dividing specifications of the Serial Converter Unit.

Example

Setting Example
Correct setting for a linear encoder pitch of 20 μm and a maximum motor speed of 5 m/s (Pn385 = 50): Pn281 = 28 (edges/pitch)
Incorrect setting: Pn281 = 29 (edges/pitch) (An A.041 alarm would be output.)

Example

Pulse Output Example
When Pn281 = 20 (20-edge output (5-pulse output) per linear encoder pitch)

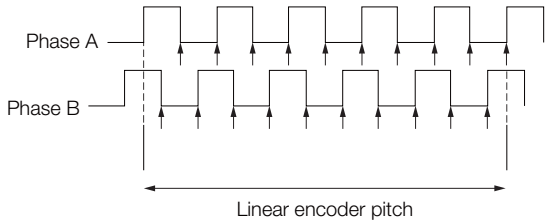

6.9 Internal Set Speed Control

You can set motor speeds in three parameters in the SERVOPACK and then perform speed control by using external input signals to select the motor speed and direction. Because the speed is controlled with parameters in the SERVOPACK, an external pulse generator or a reference generator is not required to control the speed.

- Rotary Servomotors

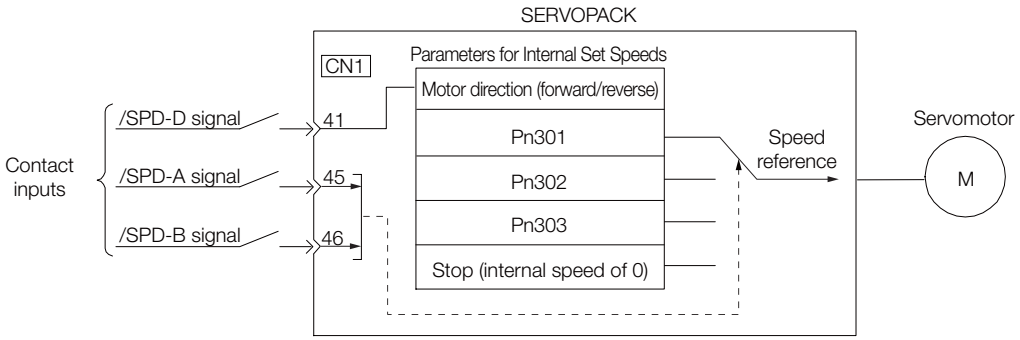

- Linear Servomotors

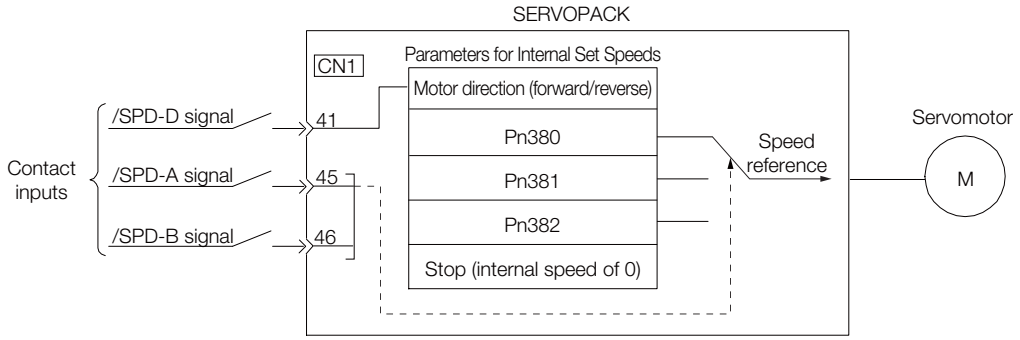

6.9.1 Input Signals for Internal Set Speed Control

The following input signals are used to change the speed.

When Using the Default Input Signal Allocations (Pn50A = n.□□□0)

Type	Signal	Connector Pin No.	Meaning
Input	/SPD-D	CN1-41	Changes the Servomotor direction.
	/SPD-A	CN1-45	Used to select the internal set speed.
	/SPD-B	CN1-46	Used to select the internal set speed.

When Changing Input Signal Allocations (Pn50A = n.□□□1)

Type	Signal	Connector Pin No.	Meaning
Input	/SPD-D	Must be allocated.	Changes the Servomotor direction.
	/SPD-A		Used to select the internal set speed.
	/SPD-B		Used to select the internal set speed.

Note: You must allocate the /SPD-D, /SPD-A, and /SPD-B signals to use them. You can use the following parameters to allocate the signal to a terminal.
- Pn50C = n.□□□X (/SPD-D (Motor Direction) Signal Allocation)
- Pn50C = n.□□X□ (/SPD-A (Internal Set Speed Selection Input) Signal Allocation)
- Pn50C = n.□X□□ (/SPD-B (Internal Set Speed Selection Input) Signal Allocation)

Refer to the following section for details.
☞ *6.1.1 Input Signal Allocations* on page 6-5

6.9.2 Setting the Control Method to Internal Set Speed Control

Set Pn000 to n.□□X□ (Control Method Selection) to 3 to specify internal set speed control.

Parameter		Meaning	When Enabled	Classification
Pn000	n.□□3□	Internal set speed control with contact commands	After restart	Setup

6.9.3 Settings for Internal Set Speed Control

The parameters that you set depend on the type of Servomotor.

- Rotary Servomotors

Pn301	Internal Set Speed 1			Speed	
	Setting Range	Setting Unit*	Default Setting	When Enabled	Classification
	0 to 10,000	1 min^{-1}	100	Immediately	Setup
Pn302	Internal Set Speed 2			Speed	
	Setting Range	Setting Unit*	Default Setting	When Enabled	Classification
	0 to 10,000	1 min^{-1}	200	Immediately	Setup
Pn303	Internal Set Speed 3			Speed	
	Setting Range	Setting Unit*	Default Setting	When Enabled	Classification
	0 to 10,000	1 min^{-1}	300	Immediately	Setup

* When a Direct Drive Servomotor is connected, the setting unit will automatically be 0.1 min^{-1}.

Note: If you set a value that exceeds the maximum speed of the Servomotor, the actual speed will be limited to the maximum speed of the Servomotor.

- Linear Servomotors

Pn380	Internal Set Speed 1			Speed	
	Setting Range	Setting Unit	Default Setting	When Enabled	Classification
	0 to 10,000	1 mm/s	10	Immediately	Setup
Pn381	Internal Set Speed 2			Speed	
	Setting Range	Setting Unit	Default Setting	When Enabled	Classification
	0 to 10,000	1 mm/s	20	Immediately	Setup
Pn382	Internal Set Speed 3			Speed	
	Setting Range	Setting Unit	Default Setting	When Enabled	Classification
	0 to 10,000	1 mm/s	30	Immediately	Setup

Note: If you set a value that exceeds the maximum speed of the Servomotor, the actual speed will be limited to the maximum speed of the Servomotor.

6.9.4 Changing Internal Set Speeds with Input Signals

You can select the internal set speed and direction with the ON/OFF combinations of the /SPD-D (Motor Direction) signal and the /SPD-A and /SPD-B (Internal Set Speed Selection) signals.

- Rotary Servomotors

Input Signals			Motor Direction	Motor Speed
/SPD-D	/SPD-A	/SPD-B		
OFF	OFF	OFF	Forward	Stops the motor with an internal speed of 0.
	OFF	ON		Operates the motor with internal set speed 1, which is set in Pn301.
	ON	ON		Operates the motor with internal set speed 2, which is set in Pn302.
	ON	OFF		Operates the motor with internal set speed 3, which is set in Pn303.
ON	OFF	OFF	Reverse	Stops the motor with an internal speed of 0.
	OFF	ON		Operates the motor with internal set speed 1, which is set in Pn301.
	ON	ON		Operates the motor with internal set speed 2, which is set in Pn302.
	ON	OFF		Operates the motor with internal set speed 3, which is set in Pn303.

- Linear Servomotors

Input Signals			Motor Direction	Motor Speed
/SPD-D	/SPD-A	/SPD-B		
OFF	OFF	OFF	Forward	Stops the motor with an internal speed of 0.
	OFF	ON		Operates the motor with internal set speed 1, which is set in Pn380.
	ON	ON		Operates the motor with internal set speed 2, which is set in Pn381.
	ON	OFF		Operates the motor with internal set speed 3, which is set in Pn382.
ON	OFF	OFF	Reverse	Stops the motor with an internal speed of 0.
	OFF	ON		Operates the motor with internal set speed 1, which is set in Pn380.
	ON	ON		Operates the motor with internal set speed 2, which is set in Pn381.
	ON	OFF		Operates the motor with internal set speed 3, which is set in Pn382.

An operating example of speed control with the internal set speeds is given below. This example combines speed control with the internal set speeds with the soft start function. The shock that results from speed changes is reduced by using the soft start function.

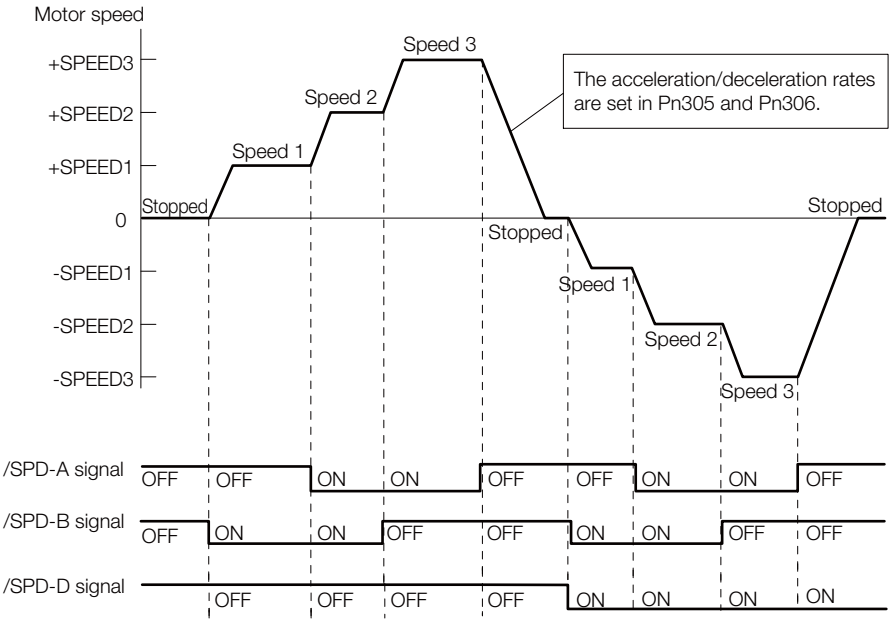

6.10 Selecting Combined Control Methods

You can specify switching the SERVOPACK between two control methods. To combine control methods, set Pn000 = n.□□X□ (Control Method Selection) to between 4 and B. This section describes how to switch between the methods and the switching conditions.

Parameter		Combined Control Methods			When Enabled	Classification
Pn000	n.□□4□	Internal set speed control	⇔	Speed control with external references	After restart	Setup
	n.□□5□	Internal set speed control	⇔	Position control		
	n.□□6□	Internal set speed control	⇔	Torque control		
	n.□□7□	Position control	⇔	Speed control with external references		
	n.□□8□	Position control	⇔	Torque control		
	n.□□9□	Torque control	⇔	Speed control with external references		
	n.□□A□	Speed control with external references	⇔	Speed control with zero clamping		
	n.□□B□	Normal position control	⇔	Position control with reference pulse inhibition		

6.10.1 Setting Pn000 = n.□□X□ (Control Method Selection) to 4, 5, or 6

The conditions for switching between internal set speed control and another control method are given below.

When Using the Default Input Signal Allocations (Pn50A = n.□□□0)

You can use the /SPD-A and /SPD-B (Internal Set Speed Selection) signals to change the control method and select the internal set speed.
You can switch between speed control, position control, or torque control and internal set speed control even while the Servomotor is operating.

- Rotary Servomotors

Input Pins			Motor Direction	Operation for Setting of Pn000 = n.□□X□		
/SPD-D (CN1-41)	/SPD-A (CN1-45)	/SPD-B (CN1-46)		n.□□4□	n.□□5□	n.□□6□
OFF	OFF	OFF	Forward	Speed control	Position control	Torque control
	OFF	ON		Operates the motor with internal set speed 1, which is set in Pn301.		
	ON	ON		Operates the motor with internal set speed 2, which is set in Pn302.		
	ON	OFF		Operates the motor with internal set speed 3, which is set in Pn303.		
ON	OFF	OFF	Reverse	Speed control	Position control	Torque control
	OFF	ON		Operates the motor with internal set speed 1, which is set in Pn301.		
	ON	ON		Operates the motor with internal set speed 2, which is set in Pn302.		
	ON	OFF		Operates the motor with internal set speed 3, which is set in Pn303.		

• Linear Servomotors

Input Pins			Motor Direction	Operation for Setting of Pn000 = n.□□X□		
/SPD-D (CN1-41)	/SPD-A (CN1-45)	/SPD-B (CN1-46)		n.□□4□	n.□□5□	n.□□6□
OFF	OFF	OFF	Forward	Speed control	Position control	Force control
	OFF	ON		Operates the motor with internal set speed 1, which is set in Pn380.		
	ON	ON		Operates the motor with internal set speed 2, which is set in Pn381.		
	ON	OFF		Operates the motor with internal set speed 3, which is set in Pn382.		
ON	OFF	OFF	Reverse	Speed control	Position control	Force control
	OFF	ON		Operates the motor with internal set speed 1, which is set in Pn380.		
	ON	ON		Operates the motor with internal set speed 2, which is set in Pn381.		
	ON	OFF		Operates the motor with internal set speed 3, which is set in Pn382.		

An example of operation for Pn000 = n.□□5□ (Switching between internal set speed control and position control) is given below. This example combines speed control with the internal set speeds with the soft start function. The shock that results from speed changes is reduced by using the soft start function.

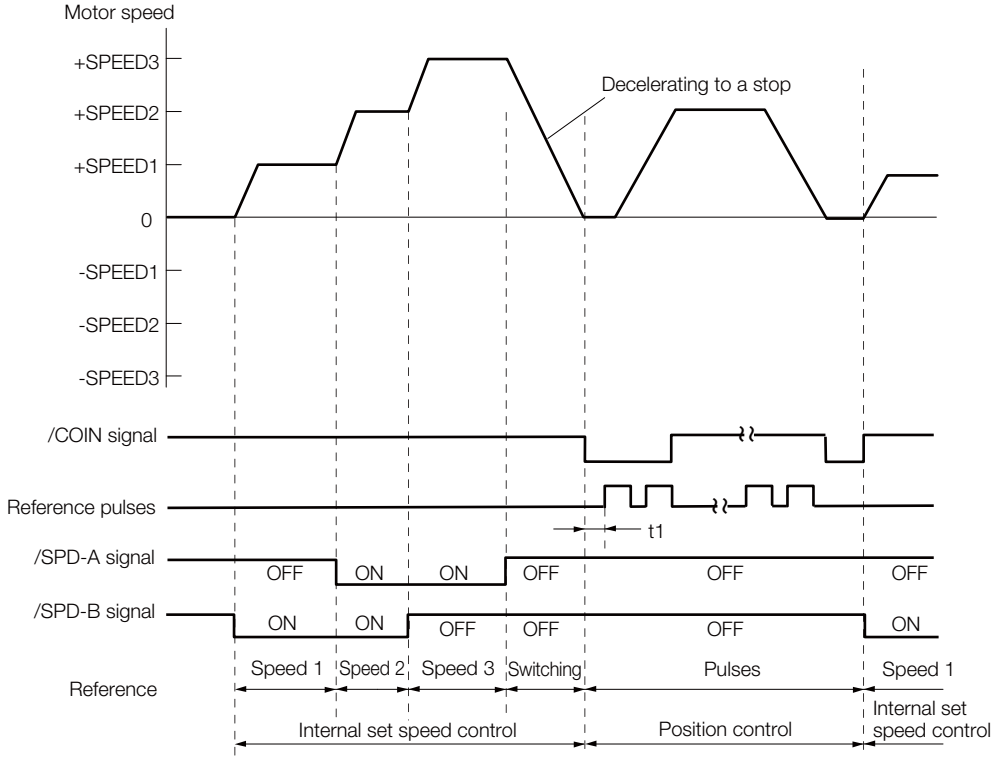

Note: 1. Set t1 so that it is greater than 2 ms. The value of t1 is not affected by whether the soft start function is used.
2. A maximum delay of 2 ms occurs in reading the /SPD-A and /SPD-B signals.
3. The speed is decelerated with the deceleration time set in Pn306 (Soft Start Deceleration Time), and internal set speed control is changed to position control after the Servomotor comes to a stop.
The pulse train reference is received after the switch to position control. Always wait until after position control is started before you input the pulse train reference from the host computer. After position control is started, the /COIN (Positioning Completion) signal is output. Use the /COIN signal to confirm that the control method has changed.

When Changing Input Signal Allocations (Pn50A = n.□□□1)

The following four signals are assigned to CN1-40 to CN1-46 on the I/O signal connector: /C-SEL (Control Selection), /SPD-A and /SPD-B (Internal Set Speed Selection) signals, and /SPD-D (Motor Direction) signal.

The control method is switched by turning the /C-SEL signal ON and OFF.

Type	Signal	Connector Pin No.	Setting	Control Method for Setting of Pn000 = n.□□X□		
				n.□□4□	n.□□5□	n.□□6□
Input	/C-SEL	Must be allocated.	ON (closed)	Speed control	Position control	Torque control
			OFF (open)	Internal set speed control	Internal set speed control	Internal set speed control

Note: You must allocate the /C-SEL signal to use it. Use Pn50C = n.X□□□ (/C-SEL (Control Selection Input) Signal Allocation) to allocate the signal to a connector pin. Refer to the following section for details.
☞ *6.1.1 Input Signal Allocations* on page 6-5

The operating method for internal set speed control (i.e., the /C-SEL signal is OFF) is given below.

- Rotary Servomotors

Input Signals			Motor Direction	Motor Speed
/SPD-D	/SPD-A	/SPD-B		
OFF	OFF	OFF	Forward	Stops the motor with an internal speed of 0.
	OFF	ON		Operates the motor with internal set speed 1, which is set in Pn301.
	ON	ON		Operates the motor with internal set speed 2, which is set in Pn302.
	ON	OFF		Operates the motor with internal set speed 3, which is set in Pn303.
ON	OFF	OFF	Reverse	Stops the motor with an internal speed of 0.
	OFF	ON		Operates the motor with internal set speed 1, which is set in Pn301.
	ON	ON		Operates the motor with internal set speed 2, which is set in Pn302.
	ON	OFF		Operates the motor with internal set speed 3, which is set in Pn303.

- Linear Servomotors

Input Signals			Motor Direction	Motor Speed
/SPD-D	/SPD-A	/SPD-B		
OFF	OFF	OFF	Forward	Stops the motor with an internal speed of 0.
	OFF	ON		Operates the motor with internal set speed 1, which is set in Pn380.
	ON	ON		Operates the motor with internal set speed 2, which is set in Pn381.
	ON	OFF		Operates the motor with internal set speed 3, which is set in Pn382.
ON	OFF	OFF	Reverse	Stops the motor with an internal speed of 0.
	OFF	ON		Operates the motor with internal set speed 1, which is set in Pn380.
	ON	ON		Operates the motor with internal set speed 2, which is set in Pn381.
	ON	OFF		Operates the motor with internal set speed 3, which is set in Pn382.

Note: You must allocate the /SPD-D, /SPD-A, and /SPD-B signals to use them. You can use the following parameters to allocate the signal to a terminal.
- Pn50C = n.□□□X (/SPD-D (Motor Direction) Signal Allocation)
- Pn50C = n.□□X□ (/SPD-A (Internal Set Speed Selection Input) Signal Allocation)
- Pn50C = n.□X□□ (/SPD-B (Internal Set Speed Selection Input) Signal Allocation)

Refer to the following section for details.
☞ *6.1.1 Input Signal Allocations* on page 6-5

6.10.2 Setting Pn000 = n.□□X□ (Control Method Selection) to 7, 8, or 9

You can set Pn000 = n.□□X□ (Control Method Selection) to switch between the following control methods.

- Switching between position control and speed control
- Switching between position control and torque control
- Switching between torque control and speed control

When Using the Default Input Signal Allocations (Pn50A = n.□□□0)

Type	Signal	Connector Pin No.	Signal Status	Control Method for Setting of Pn000 = n.□□X□		
				n.□□7□	n.□□8□	n.□□9□
Input	/C-SEL	CN1-41	ON (closed)	Speed control	Torque control	Speed control
			OFF (open)	Position control	Position control	Torque control

When Changing Input Signal Allocations (Pn50A = n.□□□1)

Type	Signal	Connector Pin No.	Signal Status	Control Method for Setting of Pn000 = n.□□X□		
				n.□□7□	n.□□8□	n.□□9□
Input	/C-SEL	Must be allocated.	ON (closed)	Speed control	Torque control	Speed control
			OFF (open)	Position control	Position control	Torque control

Note: You must allocate the /C-SEL signal to use it. Use Pn50C = n.X□□□ (/C-SEL (Control Selection Input) Signal Allocation) to allocate the signal to a connector pin.
☞ *6.1.1 Input Signal Allocations* on page 6-5

6.10.3 Setting Pn000 = n.□□X□ (Control Method Selection) to A or B

You can set Pn000 = n.□□X□ (Control Method Selection) to switch between the following control methods.

- Switching between speed control with analog references and speed control with zero clamping
- Switching between normal position control and position control with reference pulse inhibition

When Using the Default Input Signal Allocations (Pn50A = n.□□□0)

Type	Signal	Connector Pin No.	Signal Status	Control Method for Setting of Pn000 = n.□□X□	
				n.□□A□	n.□□B□
Input	/ZCLAMP	CN1-41	ON (closed)	Speed control with zero clamping	–
			OFF (open)	Speed control	–
	/INHIBIT		ON (closed)	–	Position control with reference pulse inhibition
			OFF (open)	–	Position control

When Changing Input Signal Allocations (Pn50A = n.□□□1)

Type	Signal	Connector Pin No.	Signal Status	Control Method for Setting of Pn000 = n.□□X□	
				n.□□A□	n.□□B□
Input	/ZCLAMP	Must be allocated.	ON (closed)	Speed control with zero clamping	–
			OFF (open)	Speed control	–
	/INHIBIT		ON (closed)	–	Position control with reference pulse inhibition
			OFF (open)	–	Position control

Note: You must allocate the /ZCLAMP and /INHIBIT signals to use them. You can use the following parameters to allocate the signal to a terminal.
- Pn50D = n.□□□X (/ZCLAMP (Zero Clamping Input) Signal Allocation)
- Pn50D = n.□□X□ (/INHIBIT (Reference Pulse Inhibit Input) Signal Allocation)

Refer to the following section for details.
☞ *6.1.1 Input Signal Allocations* on page 6-5

6.11 Selecting Torque Limits

You can limit the torque that is output by the Servomotor.

There are four different ways to limit the torque. These are described in the following table.

Limit Method	Outline	Control Method	Reference
Internal Torque Limits	The torque is always limited with the setting of a parameter.	Speed control, position control, or torque control	6.11.1
External Torque Limits	The torque is limited with an input signal from the host computer.		6.11.2
Limiting Torque with an Analog Reference	An analog reference is used to set the required torque limits.	Speed control or position control	6.11.3
Limiting Torque with an External Torque Limit and an Analog Reference	The torque is limited by combining torque limits for an external input signal and torque limits for an analog reference.	Speed control or position control	6.11.4

Note: If you set a value that exceeds the maximum torque of the Servomotor, the torque will be limited to the maximum torque of the Servomotor.

6.11.1 Internal Torque Limits

If you use internal torque limits, the maximum output torque will always be limited to the specified forward torque limit (Pn402) and reverse torque limit (Pn403).

- Rotary Servomotors

Pn402	Forward Torque Limit			Speed Position Torque	
	Setting Range	Setting Unit	Default Setting	When Enabled	Classification
	0 to 800	1%*	800	Immediately	Setup
Pn403	Reverse Torque Limit			Speed Position Torque	
	Setting Range	Setting Unit	Default Setting	When Enabled	Classification
	0 to 800	1%*	800	Immediately	Setup

* Set a percentage of the rated motor torque.

Note: If the setting of Pn402 or Pn403 is too low, the torque may be insufficient for acceleration or deceleration of the Servomotor.

Without Internal Torque Limits (Output to the maximum torque is possible.)	With Internal Torque Limits
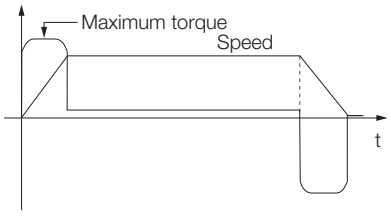	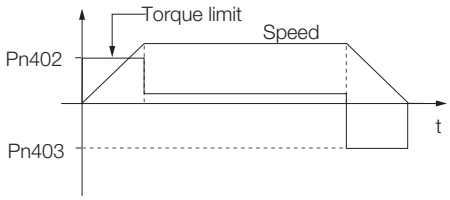

• Linear Servomotors

Pn483	Forward Force Limit			Speed Position Force	
	Setting Range	Setting Unit	Default Setting	When Enabled	Classification
	0 to 800	1%*	30	Immediately	Setup
Pn484	Reverse Force Limit			Speed Position Force	
	Setting Range	Setting Unit	Default Setting	When Enabled	Classification
	0 to 800	1%*	30	Immediately	Setup

* Set a percentage of the rated motor force.

Note: If the setting of Pn483 or Pn484 is too low, the force may be insufficient for acceleration or deceleration of the Servomotor.

Without Internal Torque Limits (Output to the maximum force is possible.)	With Internal Force Limits
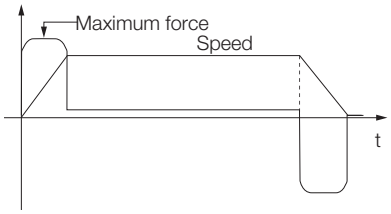	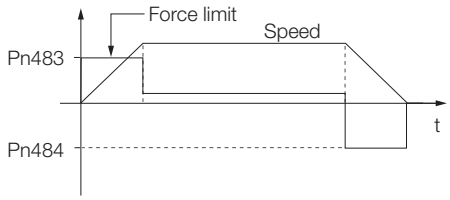

6.11.2 External Torque Limits

You can limit the torque only when required by the operating conditions of the machine by turning a signal ON and OFF.

You can use this for applications such as stopping on physical contact, or holding a workpiece with a robot.

External Torque Limit Reference Signals

The /P-CL (Forward External Torque Limit) and /N-CL (Reverse External Torque Limit) signals are used as the external torque limit reference signals. The /P-CL signal is used for the forward torque limit and the /N-CL signal is used for the reverse torque limit.

Type	Signal	Connector Pin No.	Signal Status	Meaning
Input	/P-CL	CN1-45 (default setting)	ON (closed)	Applies the forward external torque limit. The torque is limited to the smaller of the settings of Pn402*1 and Pn404.
			OFF (open)	Cancels the forward external torque limit. The torque is limited to the setting of Pn402*1.
Input	/N-CL	CN1-46 (default setting)	ON (closed)	Applies the reverse external torque limit. The torque is limited to the smaller of the settings of Pn403*2 and Pn405.
			OFF (open)	Cancels the reverse external torque limit. The torque is limited to the setting of Pn403*2.

*1. Pn483 is used for a Linear Servomotor.
*2. Pn484 is used for a Linear Servomotor.

Note: You can use the following parameters to allocate the /P-CL and /N-CL signals to other terminals.
• Pn50B = n.□X□□ (/P-CL (Forward External Torque Limit Input) Signal Allocation)
• Pn50B = n.X□□□ (/N-CL (Reverse External Torque Limit Input) Signal Allocation)
Refer to the following section for details.
☞ *6.1.1 Input Signal Allocations* on page 6-5

Setting the Torque Limits

The parameters that are related to setting the torque limits are given below.

- Rotary Servomotors
  If the setting of Pn402 (Forward Torque Limit), Pn403 (Reverse Torque Limit), Pn404 (Forward External Torque Limit), or Pn405 (Reverse External Torque Limit) is too low, the torque may be insufficient for acceleration or deceleration of the Servomotor.

Pn402	Forward Torque Limit			Speed Position Torque	
	Setting Range	Setting Unit	Default Setting	When Enabled	Classification
	0 to 800	1%*	800	Immediately	Setup
Pn403	Reverse Torque Limit			Speed Position Torque	
	Setting Range	Setting Unit	Default Setting	When Enabled	Classification
	0 to 800	1%*	800	Immediately	Setup
Pn404	Forward External Torque Limit			Speed Position Torque	
	Setting Range	Setting Unit	Default Setting	When Enabled	Classification
	0 to 800	1%*	100	Immediately	Setup
Pn405	Reverse External Torque Limit			Speed Position Torque	
	Setting Range	Setting Unit	Default Setting	When Enabled	Classification
	0 to 800	1%*	100	Immediately	Setup

* Set a percentage of the rated motor torque.

- Linear Servomotors
  If the setting of Pn483 (Forward Force Limit), Pn484 (Reverse Force Limit), Pn404 (Forward External Force Limit), or Pn405 (Reverse External Force Limit) is too low, the force may be insufficient for acceleration or deceleration of the Servomotor.

Pn483	Forward Force Limit			Speed Position Force	
	Setting Range	Setting Unit	Default Setting	When Enabled	Classification
	0 to 800	1%*	30	Immediately	Setup
Pn484	Reverse Force Limit			Speed Position Force	
	Setting Range	Setting Unit	Default Setting	When Enabled	Classification
	0 to 800	1%*	30	Immediately	Setup
Pn404	Forward External Force Limit			Speed Position Force	
	Setting Range	Setting Unit	Default Setting	When Enabled	Classification
	0 to 800	1%*	100	Immediately	Setup
Pn405	Reverse External Force Limit			Speed Position Force	
	Setting Range	Setting Unit	Default Setting	When Enabled	Classification
	0 to 800	1%*	100	Immediately	Setup

* Set a percentage of the rated motor force.

Changes in the Output Torque for External Torque Limits

The following table shows the changes in the output torque when the internal torque limit is set to 800%.

- Rotary Servomotors

In this example, the Servomotor direction is set to Pn000 = n.□□□0 (Use CCW as the forward direction).

		/P-CL signal	
		OFF	ON
/N-CL signal	OFF	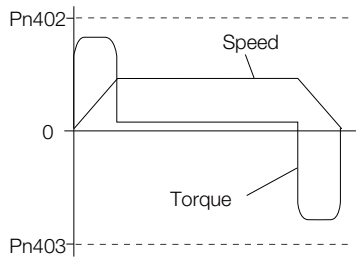	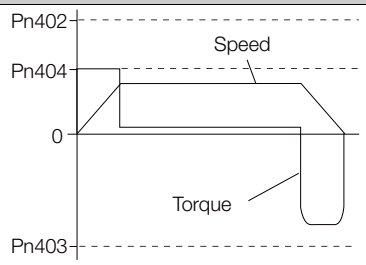
	ON	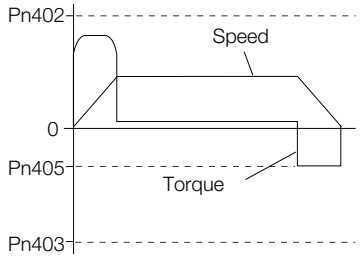	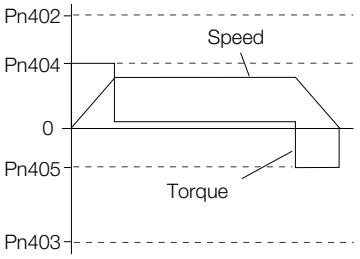

- Linear Servomotors

In this example, the Servomotor direction is set to Pn000 = n.□□□0 (Use the direction in which the linear encoder counts up as the forward direction).

		/P-CL signal	
		OFF	ON
/N-CL signal	OFF	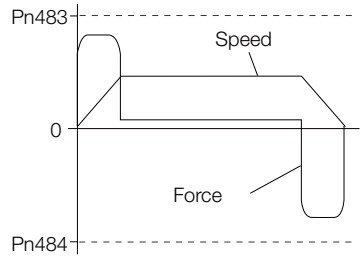	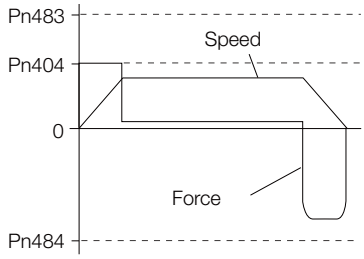
	ON	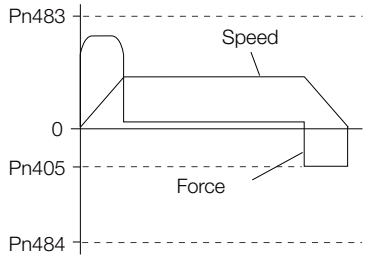	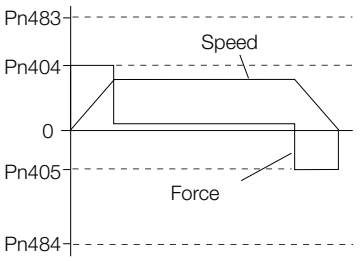

6.11.3 Limiting Torque with an Analog Reference

The analog voltage on the T-REF terminals (CN1-9 and CN1-10) is used to limit the torque with an analog reference.

The smallest of the analog reference torque reference and the torque limits for Pn402*1 and Pn403*2 is used.

*1. Pn483 is used for a Linear Servomotor.
*2. Pn484 is used for a Linear Servomotor.

The block diagrams for limiting the torque during speed control are provided below.

- Rotary Servomotors

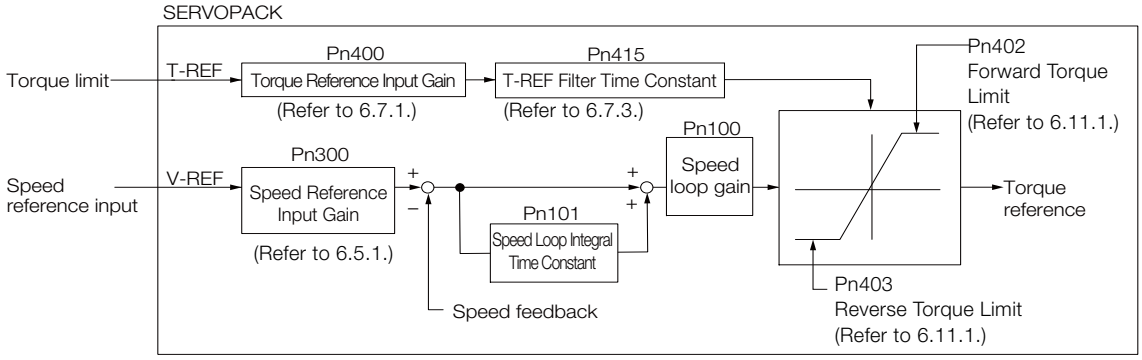

Information There is no polarity for the input voltage of the analog voltage reference for the torque limit. The absolute value of a voltage is input, and a torque limit that corresponds to that absolute value is applied in the forward and reverse directions.

- Linear Servomotors

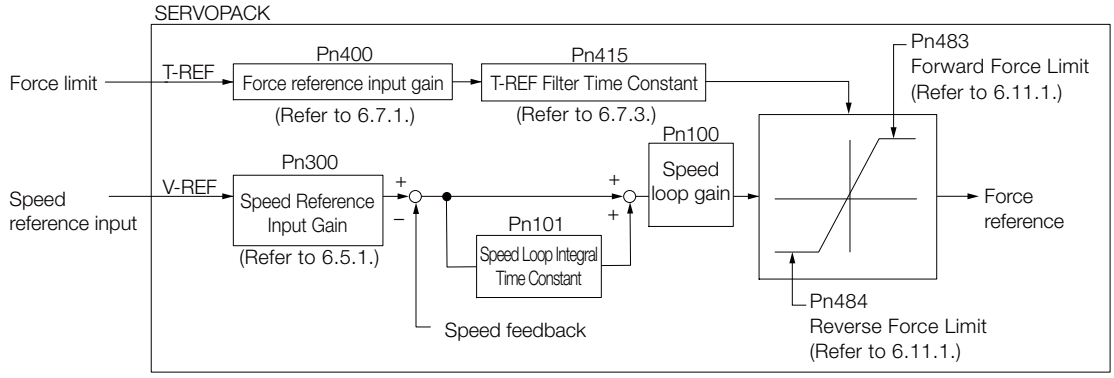

Information There is no polarity for the input voltage of the analog voltage reference for the force limit. The absolute value of a voltage is input, and a force limit that corresponds to the absolute value of the input voltage is applied in the forward and reverse directions.

T-REF (Torque Reference Input) Signal

The input signal that is used for torque limits with an analog voltage reference is described below.

Type	Signal	Connector Pin No.	Name
Input	T-REF	CN1-9	Torque reference input
	SG	CN1-10	Signal ground for torque reference input

Setting the External Torque Limit

You must set Pn002 to n.□□□1 (Use T-REF as an external torque limit input) to use T-REF (CN1-9 and CN1-10) as the torque limit input.

Parameter		Meaning	When Enabled	Classification
Pn002	n.□□□1	Use T-REF as an external torque limit input.	After restart	Setup

Settings Related to Limiting Torque with an Analog Voltage Reference

The parameters that are related to limiting torque with an analog voltage reference include parameters to set the input gain of the analog voltage reference, a reference filter time constant, and the internal torque limits.

- Rotary Servomotors

Pn400	Torque Reference Input Gain			Speed Position Torque	
	Setting Range	Setting Unit	Default Setting	When Enabled	Classification
	10 to 100	0.1 V	30 (rated torque at 3.0 V)	Immediately	Setup
Pn402	Forward Torque Limit			Speed Position Torque	
	Setting Range	Setting Unit	Default Setting	When Enabled	Classification
	0 to 800	1%*	800	Immediately	Setup
Pn403	Reverse Torque Limit			Speed Position Torque	
	Setting Range	Setting Unit	Default Setting	When Enabled	Classification
	0 to 800	1%*	800	Immediately	Setup
Pn415	T-REF Filter Time Constant			Speed Position Torque	
	Setting Range	Setting Unit	Default Setting	When Enabled	Classification
	0 to 65,535	0.01 ms	0	Immediately	Setup

* Set a percentage of the motor rated torque.

- Linear Servomotors

Pn400	Force Reference Input Gain			Speed Position Force	
	Setting Range	Setting Unit	Default Setting	When Enabled	Classification
	10 to 100	0.1 V	30 (rated force at 3.0 V)	Immediately	Setup
Pn483	Forward Force Limit			Speed Position Force	
	Setting Range	Setting Unit	Default Setting	When Enabled	Classification
	0 to 800	1%*	30	Immediately	Setup
Pn484	Reverse Force Limit			Speed Position Force	
	Setting Range	Setting Unit	Default Setting	When Enabled	Classification
	0 to 800	1%*	30	Immediately	Setup
Pn415	T-REF Filter Time Constant			Speed Position Force	
	Setting Range	Setting Unit	Default Setting	When Enabled	Classification
	0 to 65,535	0.01 ms	0	Immediately	Setup

* Set a percentage of the rated motor force.

6.11.4 Limiting Torque with an External Torque Limit and an Analog Voltage Reference

The torque is limited by combining torque limits for an external input signal and torque limits for an analog voltage reference.

When the /P-CL (Forward External Torque Limit) or /N-CL (Reverse External Torque Limit) signal is ON, the torque will be limited by the smaller of the torque limit for the analog voltage reference or the setting of Pn404 or Pn405.

The following block diagram shows limiting the torque with an external torque limit and an analog voltage reference.

- Rotary Servomotors

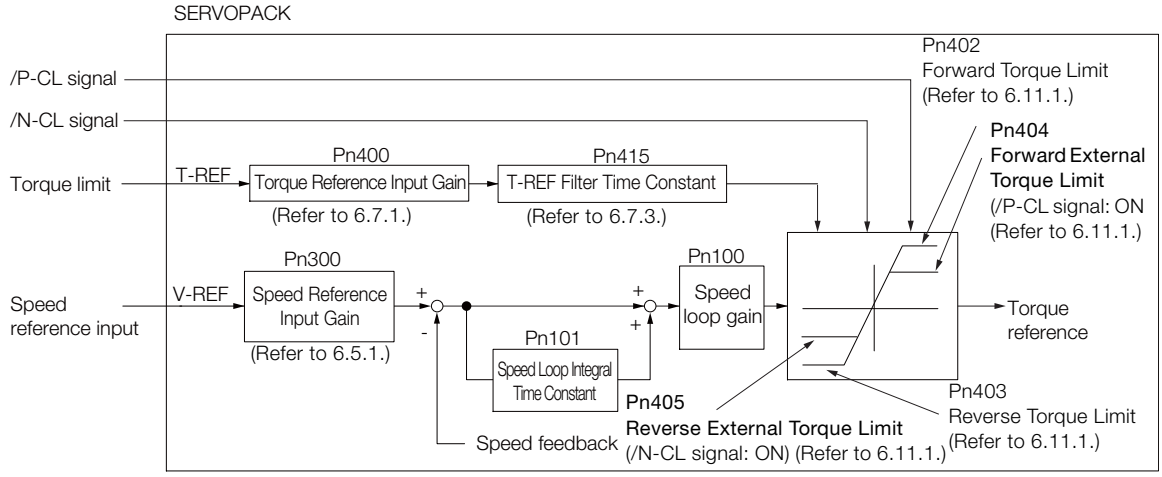

Note: You cannot use the torque limit of the analog voltage reference during torque control because the analog voltage is input with the T-REF (Torque Reference Input) signal.

- Linear Servomotors

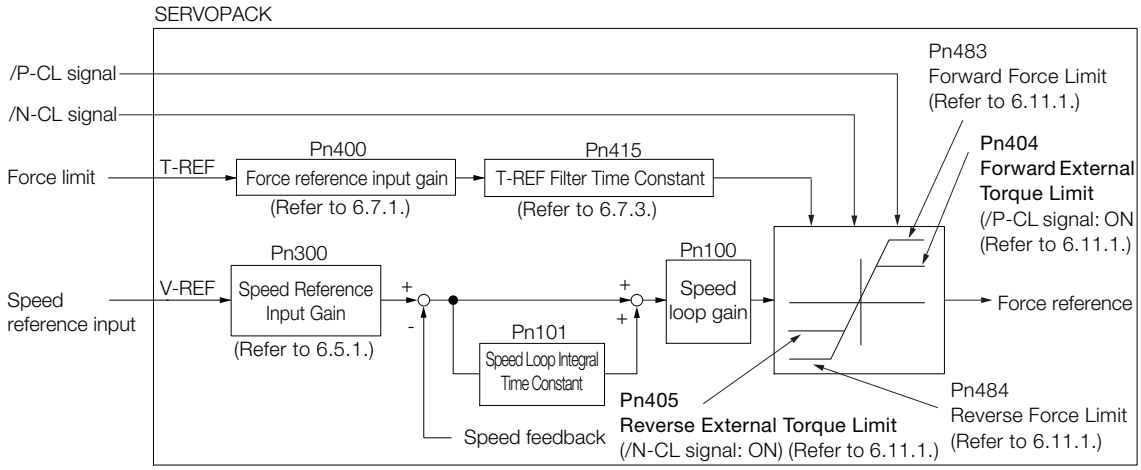

Note: You cannot use the force limit of the analog voltage reference during force control because the analog voltage is input with the T-REF (Torque Reference Input) signal.

/P-CL (Forward External Torque Limit) Signal, /N-CL (Reverse External Torque Limit) Signal, and T-REF (Torque Reference Input) Signal

The input signals that are used for torque limits with an external torque limit and an analog voltage reference are described below.

◆ T-REF (Torque Reference Input) Signal

Type	Signal	Connector Pin No.	Name
Input	T-REF	CN1-9	Torque reference input
	SG	CN1-10	Signal ground for torque reference input

◆ /P-CL (Forward External Torque Limit) Signal and /N-CL (Reverse External Torque Limit) Signal

Type	Signal	Connector Pin No.	Signal Status	Meaning
Input	/P-CL	CN1-45 (default setting)	ON (closed)	Applies the forward external torque limit. The torque is limited to the smallest of the analog reference or the setting of Pn402 or Pn404.
			OFF (open)	Cancels the forward external torque limit. The torque is limited to the setting of Pn402.
Input	/N-CL	CN1-46 (default setting)	ON (closed)	Applies the reverse external torque limit. The torque is limited to the smallest of the analog reference or the setting of Pn403 or Pn405.
			OFF (open)	Cancels the reverse external torque limit. The torque is limited to the setting of Pn403.

◆ /P-CL (Forward External Force Limit) Signal and /N-CL (Reverse External Force Limit) Signal

Type	Signal	Connector Pin No.	Signal Status	Meaning
Input	/P-CL	CN1-45 (default setting)	ON (closed)	Applies the forward external force limit. The force is limited to the smallest of the analog reference or the setting of Pn483 or Pn404.
			OFF (open)	Cancels the forward external force limit. The force is limited to the setting of Pn483.
Input	/N-CL	CN1-46 (default setting)	ON (closed)	Applies the reverse external force limit. The force is limited to the smallest of the analog reference or the setting of Pn484 or Pn405.
			OFF (open)	Cancels the reverse external force limit. The force is limited to the setting of Pn484.

Setting the Torque Limit with the External Torque Limit and an Analog Voltage Reference

To limit the torque with an external input signal and an analog voltage reference, you must set Pn002 to n.□□□3 (Use T-REF or /N_CL as the torque limit when /P_CL or /N_CL is active).

Parameter		Description	When Enabled	Classification
Pn002	n.□□□3	Use T-REF as the torque limit when /P_CL or /N_CL is active.	After restart	Setup

Related Parameters

The parameters that are related to torque limits with an external torque limit and an analog voltage reference are described below.

With the internal torque limits, the torque is always limited. To disable to internal torque limits, you must set the related parameters (Pn402, Pn403, Pn483, and Pn484) to the maximum values.

- Rotary Servomotors

Pn400	Torque Reference Input Gain			Speed Position Torque	
	Setting Range	Setting Unit	Default Setting	When Enabled	Classification
	10 to 100	0.1 V	30 (rated torque at 3.0 V)	Immediately	Setup
Pn402	Forward Torque Limit			Speed Position Torque	
	Setting Range	Setting Unit	Default Setting	When Enabled	Classification
	0 to 800	1%*	800	Immediately	Setup
Pn403	Reverse Torque Limit			Speed Position Torque	
	Setting Range	Setting Unit	Default Setting	When Enabled	Classification
	0 to 800	1%*	800	Immediately	Setup
Pn404	Forward External Torque Limit			Speed Position Torque	
	Setting Range	Setting Unit	Default Setting	When Enabled	Classification
	0 to 800	1%*	100	Immediately	Setup
Pn405	Reverse External Torque Limit			Speed Position Torque	
	Setting Range	Setting Unit	Default Setting	When Enabled	Classification
	0 to 800	1%*	100	Immediately	Setup
Pn415	T-REF Filter Time Constant			Speed Position Torque	
	Setting Range	Setting Unit	Default Setting	When Enabled	Classification
	0 to 65,535	0.01 ms	0	Immediately	Setup

* Set a percentage of the motor rated torque.

- Linear Servomotors

Pn400	Force Reference Input Gain			Speed Position Force	
	Setting Range	Setting Unit	Default Setting	When Enabled	Classification
	10 to 100	0.1 V	30 (rated force at 3.0 V)	Immediately	Setup
Pn483	Forward Force Limit			Speed Position Force	
	Setting Range	Setting Unit	Default Setting	When Enabled	Classification
	0 to 800	1%*	30	Immediately	Setup
Pn484	Reverse Force Limit			Speed Position Force	
	Setting Range	Setting Unit	Default Setting	When Enabled	Classification
	0 to 800	1%*	30	Immediately	Setup
Pn404	Forward External Force Limit			Speed Position Force	
	Setting Range	Setting Unit	Default Setting	When Enabled	Classification
	0 to 800	1%*	100	Immediately	Setup
Pn405	Reverse External Force Limit			Speed Position Force	
	Setting Range	Setting Unit	Default Setting	When Enabled	Classification
	0 to 800	1%*	100	Immediately	Setup
Pn415	T-REF Filter Time Constant			Speed Position Force	
	Setting Range	Setting Unit	Default Setting	When Enabled	Classification
	0 to 65,535	0.01 ms	0	Immediately	Setup

* Set a percentage of the rated motor force.

6.11.5 /CLT (Torque Limit Detection) Signal

This section describes the /CLT signal, which indicates the status of limiting the motor output torque.

Type	Signal	Connector Pin No.	Signal Status	Meaning
Output	/CLT	Must be allocated.	ON (closed)	The motor output torque is being limited.
			OFF (open)	The motor output torque is not being limited.

Note: You must allocate the /CLT signal to use it. Use Pn50F = n.□□□X (/CLT (Torque Limit Detection Output) Signal Allocation) to allocate the signal to a connector pin. Refer to the following section for details.
☞ *6.1.2 Output Signal Allocations* on page 6-8

6.12 Absolute Encoders

The absolute encoder records the current position of the stop position even when the power supply is OFF.

With a system that uses an absolute encoder, the host controller can monitor the current position. Therefore, it is not necessary to perform an origin return operation when the power supply to the system is turned ON.

There are four types of encoders for Rotary Servomotors. The usage of the encoder is specified in Pn002 = n.□X□□.

SERVOPACKs with software version 0023 or higher support batteryless absolute encoders.

Refer to the following section for encoder models.

☞ ■ *Encoder Resolution* on page 5-48

- Parameter Settings When Using an Incremental Encoder

Parameter		Meaning	When Enabled	Classification
Pn002	n.□0□□ (default setting)	Use the encoder as an incremental encoder. A battery is not required.	After restart	Setup
	n.□1□□	Use the encoder as an incremental encoder. A battery is not required.		
	n.□2□□	Use the encoder as a single-turn absolute encoder. A battery is not required.		

- Parameter Settings When Using a Single-Turn Absolute Encoder

Parameter		Meaning	When Enabled	Classification
Pn002	n.□0□□ (default setting)	Use the encoder as a single-turn absolute encoder. A battery is not required.	After restart	Setup
	n.□1□□	Use the encoder as an incremental encoder. A battery is not required.		
	n.□2□□	Use the encoder as a single-turn absolute encoder. A battery is not required.		

- Parameter Settings When Using a Multiturn Absolute Encoder

Parameter		Meaning	When Enabled	Classification
Pn002	n.□0□□ (default setting)	Use the encoder as a multiturn absolute encoder. A battery is required.	After restart	Setup
	n.□1□□	Use the encoder as an incremental encoder. A battery is not required.		
	n.□2□□	Use the encoder as a single-turn absolute encoder. A battery is not required.		

- Parameter Settings When Using a Batteryless Multiturn Absolute Encoder

Parameter		Meaning	When Enabled	Classification
Pn002	n.□0□□ (default setting)	Use the encoder as a batteryless multiturn absolute encoder. A battery is not required.	After restart	Setup
	n.□1□□	Use the encoder as an incremental encoder. A battery is not required.		
	n.□2□□	Use the encoder as a single-turn absolute encoder. A battery is not required.		

NOTICE

- **Install a battery at either the host controller or on the Encoder Cable.**
  If you install batteries both at the host controller and on the Encoder Cable at the same time, you will create a loop circuit between the batteries, resulting in a risk of damage or burning.

6.12.1 Connecting an Absolute Encoder

The following diagram shows the typical connections between a Servomotor with an absolute encoder, the SERVOPACK, and the host controller.

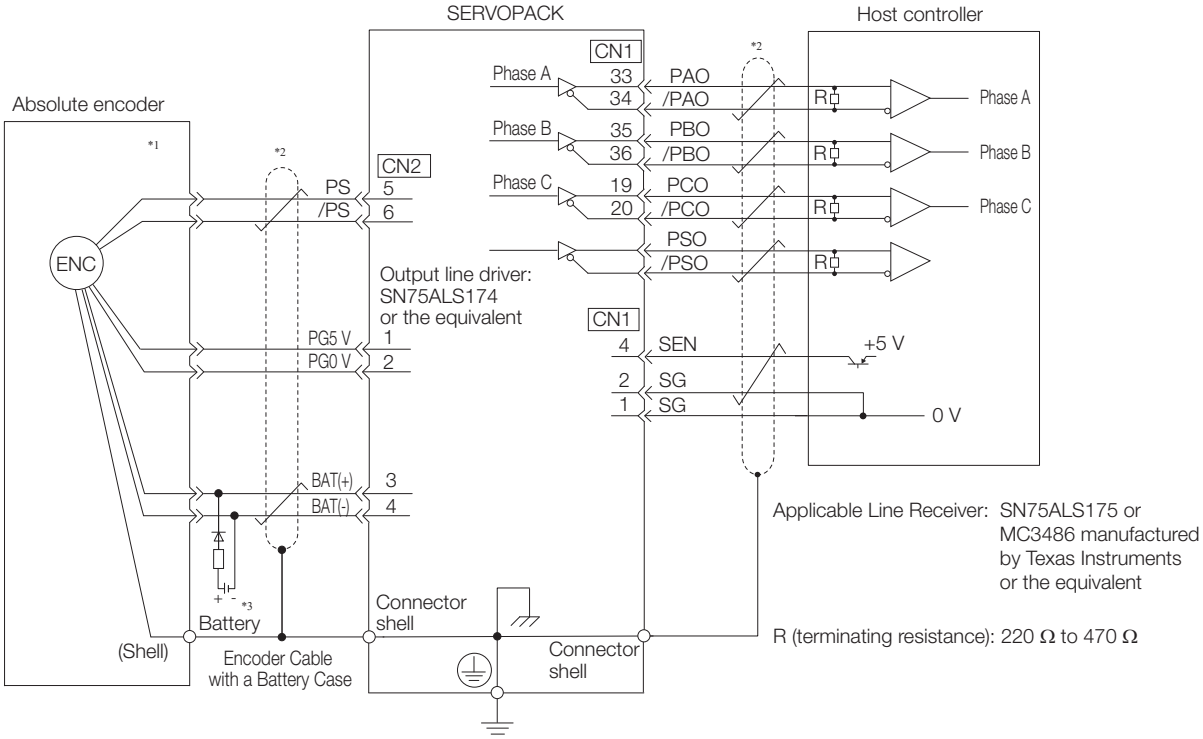

*1. The absolute encoder pin numbers for wiring the connector depend on the Servomotor that you use.

*2. represents a shielded twisted-pair cable.

*3. If you use an Encoder Cable with a Battery Case, do not install a battery at the host controller.

Refer to the following section for details on other connections.

☞ *4.4.3 Wiring the SERVOPACK to the Encoder* on page 4-26

6.12.2 Structure of the Position Data of the Absolute Encoder

The position data of the absolute encoder is the position coordinate from the origin of the absolute encoder.

The position data from the absolute encoder contains the following two items.

- The number of rotations from the origin of the encoder coordinate system (called the multiturn data)
- The position (number of pulses) within one rotation

The position data of the absolute encoder is as follows:

Position data of absolute encoder = Multiturn data × Number of pulses within one encoder rotation (setting of Pn212)+ Position (number of pulses) within one rotation.

For a single-turn absolute encoder, the multiturn data is 0.

6.12.3 Output Ports for the Position Data from the Absolute Encoder

You can read the position data of the absolute encoder from the PAO, PBO, and PCO (Encoder Divided Pulse Output) signals and the PSO (Absolute Encoder Position Output) signal.

The output method and timing for the position data of the absolute encoder are different in each case.

Encoder Divided Pulse Output Port

A conceptual diagram of the connections of the PAO, PBO, and PCO (Encoder Divided Pulse Output) signals to the host controller is provided below.

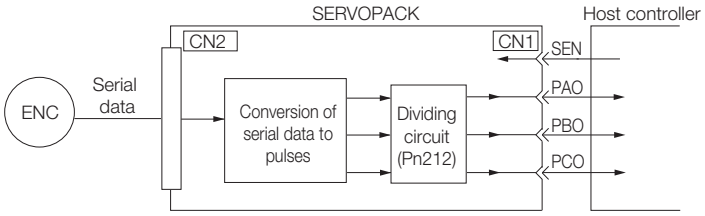

Signal	Status	Signal Contents
		When Using an Absolute Encoder
PAO	First signal	Multiturn data position within one rotation (pulse train)
	During normal operation	Incremental pulses
PBO	First signal	Position within one rotation (pulse train)
	During normal operation	Incremental pulses
PCO	Always	Origin pulse

The PAO (Encoder Divided Pulse Output) signal outputs the position data from the absolute encoder after the control power supply is turned ON. There are two methods that you can use to output the position data from the absolute encoder: Using the SEN (Absolute Data Request) signal and not using the SEN signal.

The position data of the absolute encoder is the current stop position. The absolute encoder outputs the multiturn data with the specified protocol. The absolute encoder outputs the position within one rotation as a pulse train. It then outputs pulses as an incremental encoder (incremental operation status).

The host controller must have a reception circuit (e.g., UART) for the position data from the absolute encoder. The pulse counter at the host controller will not count pulses when the multiturn data (communications message) is input because only phase A is input. Counting starts from the position of the absolute encoder within one rotation.

The output circuits for the PAO, PBO, and PCO signals use line drivers. Refer to the following section for details on line drivers.

☞ *4.5.4 I/O Circuits* on page 4-45

PSO (Absolute Encoder Position Output) Port

The PSO (Absolute Encoder Position Output) signal periodically outputs the position data from the absolute encoder according to the specified protocol after outputting the position data from the absolute encoder with the PAO and PBO signals has been completed. There are two methods that you can use to output the position data from the absolute encoder: Using the SEN (Absolute Data Request) signal and not using the SEN signal.

The host controller must have a reception circuit (e.g., UART) for the position data from the absolute encoder.

The output circuit for the PSO signal uses a line driver. Refer to the following section for details on line drivers.

☞ *4.5.4 I/O Circuits* on page 4-45

6.12.4 Reading the Position Data from the Absolute Encoder

There are two methods that you can use to read the position data from the absolute encoder: Using the SEN (Absolute Data Request) signal and not using the SEN signal.

Setting the Parameter to Specify Using or Not Using the SEN (Absolute Data Request) Signal

◆ Using the SEN Signal to Read the Position Data from the Absolute Encoder

- When Using the Default I/O Signals (Pn50A = n.□□□0)
  The setting of Pn515 = n.□□□X (SEN (Absolute Data Request Input) Signal Allocation) is ignored.
- Allocating the SEN Signal to CN1-40 to CN1-46 on the I/O Signal Connector (Pn50A = n.□□□1)
  Set Pn515 = n.□□□X (SEN (Absolute Data Request Input) Signal Allocation) to 0 to 6 or 9 to F.

Refer to the following section for the procedure to allocate input signals.

☞ *6.1.1 Input Signal Allocations* on page 6-5

Information: To use the default allocation of the SEN signal and to change the default settings of other I/O signals (Pn50A = n.□□□1), set Pn515 to n.□□□8 (Active when 5 V is input to CN1-4).

◆ Reading the Position Data from the Absolute Encoder without Using the SEN Signal

Set Pn50A to n.□□□1 and set Pn515 to n.□□□7 (The signal is always active).

Refer to the following sections for details on the parameters.

☞ *14.1 List of Parameters* on page 14-2

Connecting the SEN (Absolute Data Request) Signal

◆ Allocating the SEN Signal to CN1-4

Type	Signal	Connector Pin No.	Signal Status	Meaning
Input	SEN	CN1-4	OFF (open)	Does not request the position data from the absolute encoder. (This is the status after the power supply is turned ON.)
			ON (closed)	Requests the position data from the absolute encoder.

Circuit Example When the SEN Signal Is Allocated to CN1-4

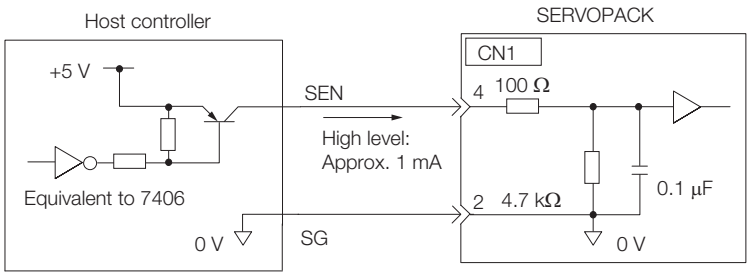

We recommend a PNP transistor.

◆ Allocating the SEN Signal to a General-Purpose Input

Type	Signal	Connector Pin No.	Signal Status	Meaning
Input	SEN	CN1-40 to CN1-46	OFF (open)	Does not request the position data from the absolute encoder. (This is the status after the power supply is turned ON.)
			ON (closed)	Requests the position data from the absolute encoder.

Refer to the following section for a circuit example for when the SEN signal is allocated to CN1-40 to CN1-46 on the I/O signal connector.

☞ ***Sequence Input Circuits*** on page 4-47

Refer to the following section for the procedure to allocate input signals.

☞ *6.1.1 **Input Signal Allocations*** on page 6-5

Sequence for Reading the Position Data from the Absolute Encoder Using the SEN (Absolute Data Request) Signal

The sequence for using the SEN signal to read the position data from the absolute encoder of a Rotary Servomotor is given below.

The multiturn data is sent according to the transmission specifications.

The position of the absolute encoder within one rotation is output as a pulse train.

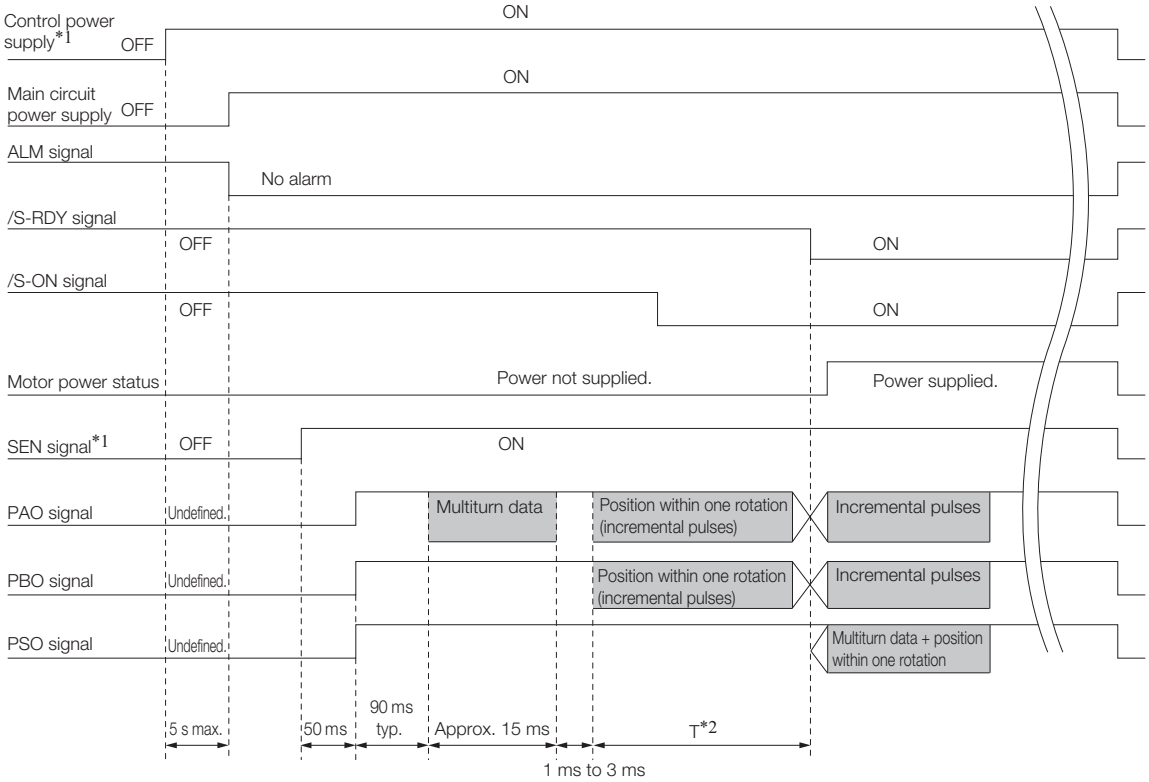

*1. When you turn OFF the control power supply, turn OFF the SEN signal.

*2. The pulse output time T for the position of the absolute encoder within one rotation depends on the setting of Pn212 (Number of Encoder Output Pulses). Refer to the following table.

Setting of Pn212	Calculation of the Pulse Output Speed for the Position of the Absolute Encoder within One Rotation	Calculation of the Pulse Output Time T for the Position of the Absolute Encoder within One Rotation
16 to 16,384	680 × Pn212/16,384 [kpps]	25 ms max.
16,386 to 32,768	680 × Pn212/32,768 [kpps]	50 ms max.
32,722 to 65,536	680 × Pn212/65,536 [kpps]	100 ms max.
65,544 to 131,072	680 × Pn212/131,072 [kpps]	200 ms max.
131,088 to 262,144	680 × Pn212/262,144 [kpps]	400 ms max.
262,176 to 524,288	680 × Pn212/524,288 [kpps]	800 ms max.
524,352 to 1,048,576	680 × Pn212/1,048,576 [kpps]	1,600 ms max.

Important

- Maintain the SEN signal at the high level for at least 1.3 seconds when you turn it OFF before you turn it ON again, as shown in the following figure.

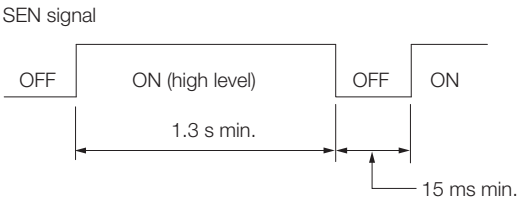

- The SEN signal is not acknowledged while the servo is ON.

Sequence for Reading the Position Data from the Absolute Encoder without Using the SEN (Absolute Data Request) Signal

The sequence for reading the position data from the absolute encoder of a Rotary Servomotor without using the SEN signal is given below.

When the specified time has elapsed after the control power supply to the SERVOPACK is turned ON, the SERVOPACK will automatically read the position data from the absolute encoder.

The position data from the absolute encoder is sent according to the transmission specifications.

The position of the absolute encoder within one rotation is output as a pulse train.

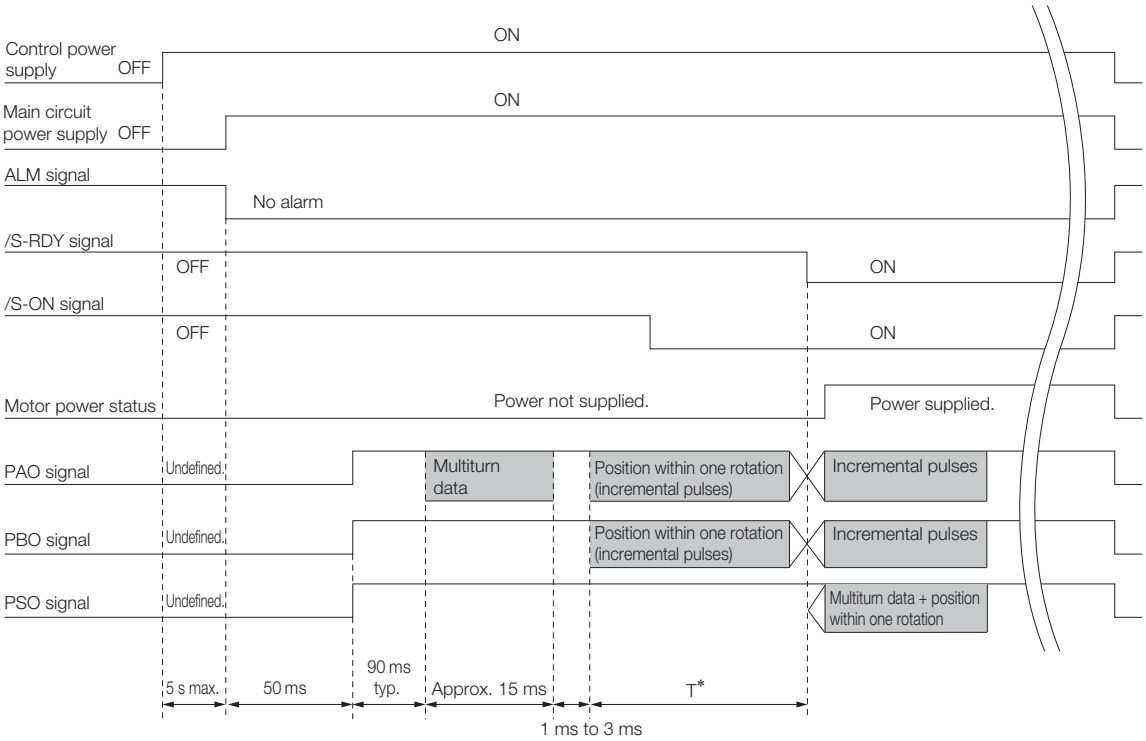

* The pulse output time T for the position of the absolute encoder within one rotation depends on the setting of Pn212 (Number of Encoder Output Pulses). Refer to the following table.

Setting of Pn212	Calculation of the Pulse Output Speed for the Position of the Absolute Encoder within One Rotation	Calculation of the Pulse Output Time T for the Position of the Absolute Encoder within One Rotation
16 to 16,384	680 × Pn212/16,384 [kpps]	25 ms max.
16,386 to 32,768	680 × Pn212/32,768 [kpps]	50 ms max.
32,722 to 65,536	680 × Pn212/65,536 [kpps]	100 ms max.
65,544 to 131,072	680 × Pn212/131,072 [kpps]	200 ms max.
131,088 to 262,144	680 × Pn212/262,144 [kpps]	400 ms max.
262,176 to 524,288	680 × Pn212/524,288 [kpps]	800 ms max.
524,352 to 1,048,576	680 × Pn212/1,048,576 [kpps]	1,600 ms max.

6.12.5 Transmission Specifications

The position data transmission specifications for the PAO (Encoder Divided Pulse Output) signal and the PSO (Absolute Encoder Position Output) signal are given in the following table.

The PAO signal sends only the multiturn data. The PSO signal sends the multiturn data plus the position of the absolute encoder within one rotation.

Refer to the following section for the timing of sending the position data from the absolute encoder.

☞ *Sequence for Reading the Position Data from the Absolute Encoder Using the SEN (Absolute Data Request) Signal* on page 6-79

☞ *Sequence for Reading the Position Data from the Absolute Encoder without Using the SEN (Absolute Data Request) Signal* on page 6-80

Item	PAO signal	PSO signal
Synchronization Method	Start-stop synchronization (ASYNC)	
Transmission Speed	9,600 bps	
Start Bits	1 bit	
Stop Bits	1 bit	
Parity	Even	
Character Code	ASCII, 7 bits	
Data Format	Refer to *Data Format of PAO Signal*.	Refer to *Data Format of PSO Signal*.
Data Output Period	Using the SEN Signal Each time the SEN signal is input after the control power supply is turned ON	40 ms
	Not Using the SEN Signal Only once after the control power supply is turned ON	

Data Format of PAO Signal

As shown below, the message format consists of eight characters: “P,” the sign, the 5-digit multiturn data, and “CR” (which indicates the end of the message).

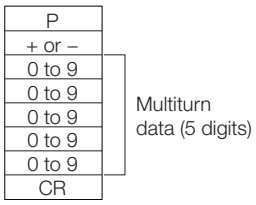

Data Format of PSO Signal

As shown below, the message format for a Rotary Servomotor consists of 17 characters: “P,” the sign, the 5-digit multiturn data, a comma delineator, the 8-digit position within one rotation, and “CR” (which indicates the end of the message).

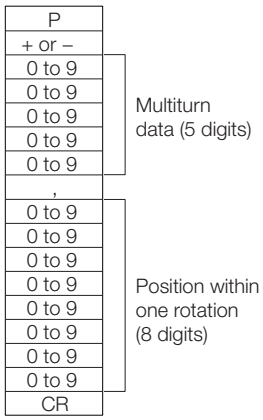

6.12.6 Calculating the Current Position in Machine Coordinates

When you reset the absolute encoder, the reset position becomes the reference position.

The host controller reads the coordinate Ps from the origin of the encoder coordinate system. The host controller must record the value of coordinate Ps.

This section describes the reference position in the machine coordinate system.

The method to calculate the coordinate value of the present position from the origin of the machine coordinate system is given below.

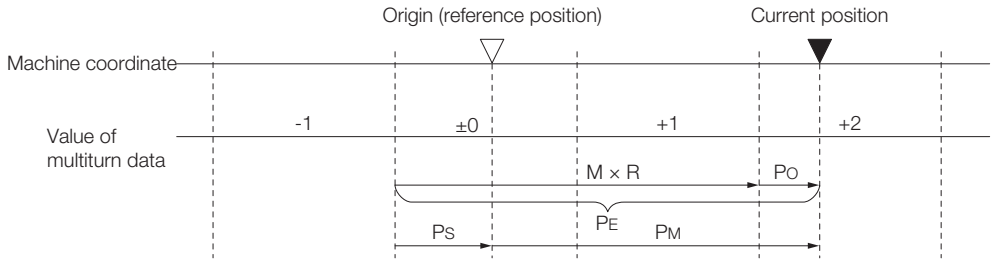

The current position P_M in the machine coordinate system is calculated as follows:

$P_M = P_E - P_S$

$P_E = M \times R + P_O$

$P_S = M_S \times R + P_S'$

Symbol	Meaning	Setting or Unit	
		Encoder Divided Pulse Output (PAO and PBO) Signals	Absolute Encoder Position Output (PSO) Signal
P_E	Position data for the current position of the absolute encoder	Encoder output pulses (encoder pulses x setting of Pn212)	Encoder pulses
M	Current position of the multiturn data of the absolute encoder	–	–
P_O	Position of the current position within one rotation	Encoder output pulses (encoder pulses x setting of Pn212)	Encoder pulses
P_S	Position data of the absolute encoder when absolute encoder was reset		
M_S	Multiturn data of the absolute encoder when absolute encoder was reset	–	–
P_S'	Position of the absolute encoder within one rotation when absolute encoder was reset	Encoder output pulses (encoder pulses x setting of Pn212)	Encoder pulses
P_M	Current position in machine coordinate system		
R	Number of encoder pulses per revolution	Setting of Pn212	Encoder resolution
Calculations for Reverse Rotation Mode (Pn000 = n.□□□1)		PM = PE - PS PE = -M × R + PO PS = MS × R + PS	PM = PE - PS PE = -M × R - PO PS = MS × R - PS'

Information

If you are using a Rotary Servomotor, you must reset the absolute encoder. Refer to the following section for information on resetting the absolute encoder.

☞ *5.17 **Resetting the Absolute Encoder*** on page 5-52

6.12.7 Alarm Output from Output Ports for the Position Data from the Absolute Encoder

Any alarm detected by the SERVOPACK is transmitted as alarm information to the host controller with the PAO (Encoder Divided Pulse Output) signal when the SEN (Absolute Data Request) signal turns OFF.

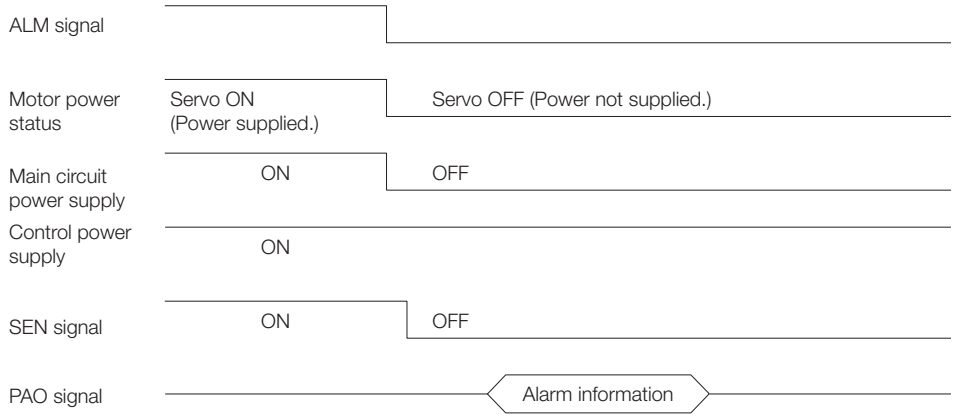

The data format of the alarm information is shown below.

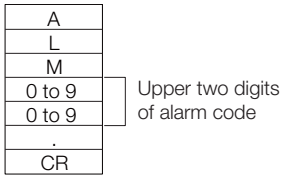

6.12.8 Multiturn Limit Setting

The multiturn limit is used in position control for a turntable or other rotating body.
For example, consider a machine that moves the turntable shown in the following diagram in only one direction.

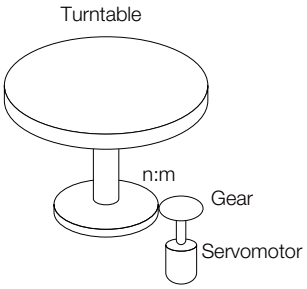

Because the turntable moves in only one direction, the upper limit to the number of rotations that can be counted by an absolute encoder will eventually be exceeded.
The multiturn limit is used in cases like this to prevent fractions from being produced by the integer ratio of the number of Servomotor rotations and the number of turntable rotations.

For a machine with a ratio of n:m between the number of Servomotor rotations and the number of turntable rotations, as shown above, the value of m minus 1 will be the setting for the multiturn limit setting (Pn205).

Multiturn limit (Pn205) = m – 1

If m = 100 and n = 3 (i.e., the turntable rotates three times for each 100 Servomotor rotations), the relationship between the number of Servomotor rotations and the number of turntable rotations would be as shown below.

Set Pn205 to 99.
Pn205 = 100 – 1 = 99

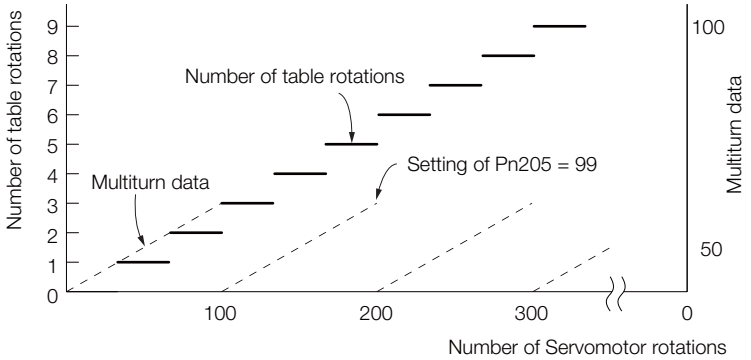

Pn205	Multiturn Limit			Speed Position Torque	
	Setting Range	Setting Unit	Default Setting	When Enabled	Classification
	0 to 65,535	1 Rev	65,535	After restart	Setup

Note: This parameter is enabled when you use an absolute encoder.

The data will change as shown below when this parameter is set to anything other than the default setting.

- If the Servomotor operates in the reverse direction when the multiturn data is 0, the multiturn data will change to the value set in Pn205.
- If the motor operates in the forward direction when the multiturn data is at the value set in Pn205, the multiturn data will change to 0.

Set Pn205 to one less than the desired multiturn data.

If you change the multiturn limit in Pn205, an A.CC0 alarm (Multiturn Limit Disagreement) will be displayed because the setting disagrees with the value in the encoder. Refer to the following section for the procedure to change the multiturn limit settings in the encoder.

☞ *6.12.9 Multiturn Limit Disagreement Alarm (A.CC0)* on page 6-85

Default Setting	Not Default Setting
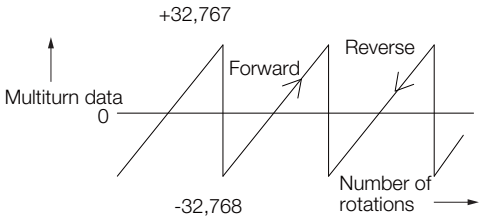	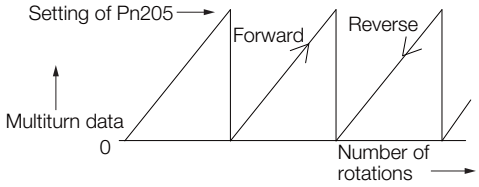

Information The multiturn data will always be 0 in the following cases. It is not necessary to reset the absolute encoder in these cases.

- When you use a single-turn absolute encoder
- When the encoder is set to be used as a single-turn absolute encoder (Pn002 = n.□2□□)

Absolute encoder-related alarms (A.810 and A.820) will not occur.

6.12.9 Multiturn Limit Disagreement Alarm (A.CC0)

If you change the multiturn limit in Pn205 (Multiturn Limit), an A.CC0 alarm (Multiturn Limit Disagreement) will be displayed because the setting disagrees with the value in the encoder.

Display	Name	Alarm Code Output			Meaning
		ALO1	ALO2	ALO3	
A.CC0	Multiturn Limit Disagreement	ON (low)	OFF (high)	ON (low)	Different multiturn limits are set in the encoder and SERVOPACK.

If this alarm is displayed, use the following procedure to change the multiturn limit in the encoder to the same value as the setting of Pn205.

Applicable Tools

The following table lists the tools that you can use to set the multiturn limit.

Tool	Fn No./Function Name	Operating Procedure Reference
Panel Operator	Fn013	*13.4.18 Multiturn Limit Setting after Multiturn Limit Disagreement Alarm (Fn013)* on page 13-26
Digital Operator	Fn013	Σ-7-Series Digital Operator Operating Manual (Manual No.: SIEP S800001 33)
SigmaWin+	***Encoder Setting – Multi-turn Limit Setting***	*Operating Procedure* on page 6-85

Operating Procedure

Use the following procedure to adjust the multiturn limit setting.

1. Click the Servo Drive Button in the workspace of the Main Window of the SigmaWin+.
2. Select **Multi-turn Limit Setting** in the Menu Dialog Box.
   The Multiturn Limit Setting Dialog Box will be displayed.
3. Click the **Continue** Button.

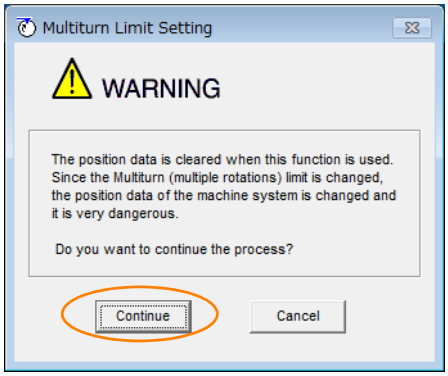

Click the **Cancel** Button to cancel setting the multiturn limit.
The Main Window will return.

4. Change the setting.

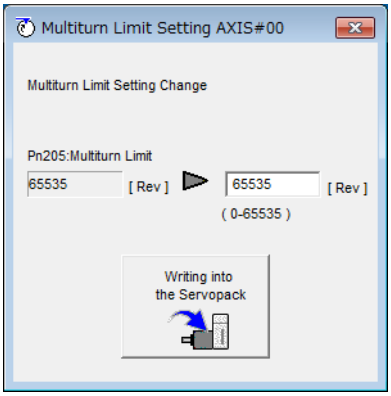

5. Click the **Writing into the Servopack** Button.

6. Click the **OK** Button.

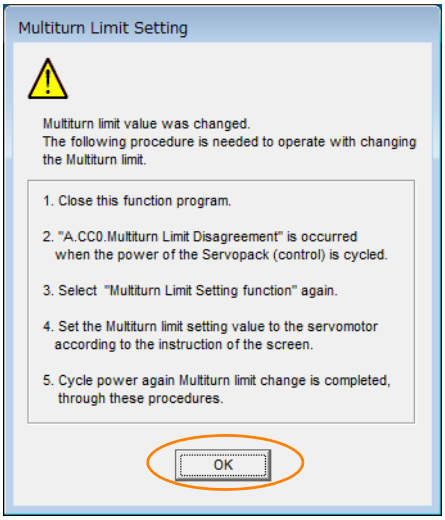

7. Turn the power supply to the SERVOPACK OFF and ON again.
An A.CC0 alarm (Multiturn Limit Disagreement) will occur because setting the multiturn limit in the Servomotor is not yet completed even though the setting has been changed in the SERVOPACK.

8. Display the **Multi-turn Limit Setting** in the Menu Dialog Box.

9. Click the **Continue** Button.

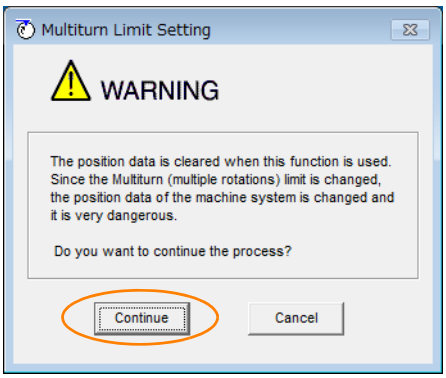

10. Click the **Writing into the servomotor** Button.

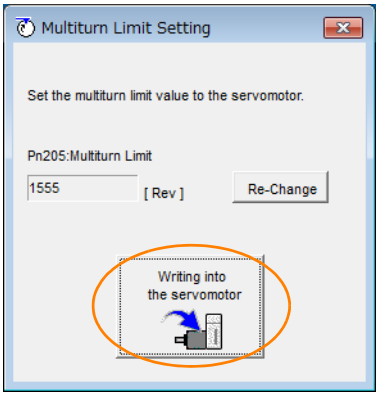

Click the **Re-change** Button to change the setting.

11. Click the **OK** Button.

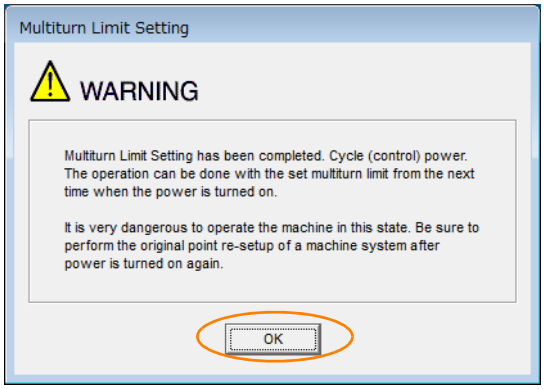

This concludes the procedure to set the multiturn limit.

6.13 Absolute Linear Encoders

The absolute linear encoder records the current position of the stop position even when the power supply is OFF.

With a system that uses an absolute linear encoder, the host controller can monitor the current position. Therefore, it is not necessary to perform an origin return operation when the power supply to the system is turned ON.

There are three types of linear encoders for Linear Servomotors. The usage of the linear encoder is specified in Pn002 = n.□X□□.

Refer to the following section for linear encoder models.

☞ ■ *Feedback Resolution of Linear Encoder* on page 5-49

- Parameter Settings When Using an Incremental Linear Encoder

Parameter		Meaning	When Enabled	Classification
Pn002	n.□0□□ (default setting)	Use the encoder as an incremental linear encoder.	After restart	Setup
	n.□1□□	Use the encoder as an incremental linear encoder.		

- Parameter Settings When Using an Absolute Linear Encoder

Parameter		Meaning	When Enabled	Classification
Pn002	n.□0□□ (default setting)	Use the encoder as an absolute linear encoder.	After restart	Setup
	n.□1□□	Use the encoder as an incremental linear encoder.		

6.13.1 Connecting an Absolute Linear Encoder

Refer to the following sections for information on the connections between an absolute linear encoder, the SERVOPACK, and the host controller.

☞ *4.4.3 Wiring the SERVOPACK to the Encoder* on page 4-26
☞ *4.5.3 I/O Signal Wiring Examples* on page 4-39

6.13.2 Structure of the Position Data of the Absolute Linear Encoder

The position data of the absolute linear encoder is the distance (number of pulses) from the origin of the absolute linear encoder.

The position data is signed 36-bit data.

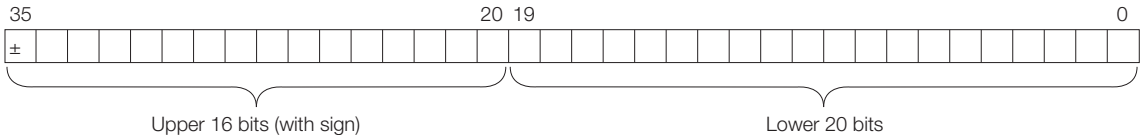

When the SERVOPACK sends the position data, it sends the upper 16-bit data (with sign) separately from the lower 20-bit data.

6.13.3 Output Ports for the Position Data from the Absolute Linear Encoder

You can read the position data of the absolute linear encoder from the PAO, PBO, and PCO (Encoder Divided Pulse Output) signals and the PSO (Absolute Encoder Position Output) signal.

The output method and timing for the position data of the absolute linear encoder are different in each case.

Encoder Divided Pulse Output (PAO, PBO, and PCO) Ports

A conceptual diagram of the connections of the PAO, PBO, and PCO (Encoder Divided Pulse Output) ports to the host controller is provided below.

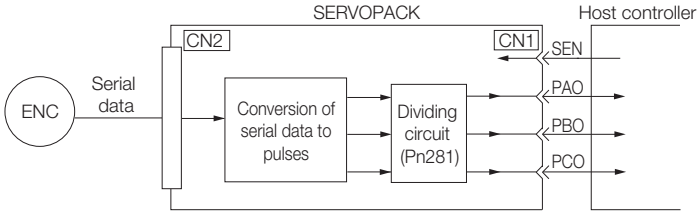

Signal	Status	Signal Contents
		When Using an Absolute Linear Encoder
PAO	First signal	Upper 16-bit data (with sign) Lower 20-bit data (pulse train)
	During normal operation	Incremental pulses
PBO	First signal	Lower 20-bit data (pulse train)
	During normal operation	Incremental pulses
PCO	Always	Origin pulse

The PAO (Encoder Divided Pulse Output) signal outputs the position data from the absolute linear encoder after the control power supply is turned ON. The SENS_ON (Turn ON Encoder) command is used to output the position data from the absolute linear encoder.

The position data of the absolute linear encoder is the current stop position. The absolute linear encoder outputs the upper 16-bit data (with sign) according to the specified protocol. The absolute encoder outputs the lower 20-bit data as a pulse train. It then outputs pulses as an incremental linear encoder (incremental operation status).

The host controller must have a reception circuit (e.g., UART) for the position data from the absolute linear encoder. The pulse counter at the host controller will not count pulses when the upper 16-bit data (with sign) (communications message) is input because only phase A is input.

The output circuits for the PAO, PBO, and PCO signals use line drivers. Refer to the following section for details on line drivers.

☞ *4.5.4 I/O Circuits* on page 4-45

PSO (Absolute Encoder Position Output) Port

The PSO (Absolute Encoder Position Output) signal periodically outputs the position data from the absolute encoder according to the specified protocol after outputting the position data from the absolute encoder with the PAO and PBO signals has been completed. There are two methods that you can use to output the position data from the absolute encoder: Using the SEN (Absolute Data Request) signal and not using the SEN signal.

The host controller must have a reception circuit (e.g., UART) for the position data from the absolute encoder.

The output circuit for the PSO signal uses a line driver. Refer to the following section for details on line drivers.

☞ *4.5.4 I/O Circuits* on page 4-45

6.13.4 Reading the Position Data from the Absolute Linear Encoder

There are two methods that you can use to read the position data from the absolute linear encoder: Using the SEN (Absolute Data Request) signal and not using the SEN signal.

Setting the Parameter to Specify Using or Not Using the SEN (Absolute Data Request) Signal

◆ Using the SEN Signal to Read the Position Data from the Absolute Linear Encoder

- When Using the Default I/O Signals (Pn50A = n.□□□0)
  Set Pn515 = n.□□□X (SEN (Absolute Data Request Input) Signal Allocation) to 0 to 6 or 9 to F.
- Allocating the SEN Signal to CN1-40 to CN1-46 on the I/O Signal Connector (Pn50A = n.□□□1)
  Set Pn515 = n.□□□X (SEN (Absolute Data Request Input) Signal Allocation) to 0 to 6 or 9 to F.

Refer to the following section for the procedure to allocate input signals.

☞ *6.1.1 Input Signal Allocations* on page 6-5

Information: To use the default allocation of the SEN signal and to change the default settings of other I/O signals (Pn50A = n.□□□1), set Pn515 to n.□□□8 (Active when 5 V is input to CN1-4).

◆ Reading the Position Data from the Absolute Linear Encoder without Using the SEN Signal

Set Pn50A to n.□□□1 and set Pn515 to n.□□□7 (The signal is always active).

Refer to the following sections for details on the parameters.

☞ *14.1 List of Parameters* on page 14-2

Connecting the SEN (Absolute Data Request) Signal

◆ Allocating the SEN Signal to CN1-4

Type	Signal	Connector Pin No.	Signal Status	Meaning
Input	SEN	CN1-4	OFF (open)	Does not request the position data from the absolute linear encoder. (This is the status after the power supply is turned ON.)
			ON (closed)	Requests the position data from the absolute linear encoder.

Circuit Example When the SEN Signal Is Allocated to CN1-4

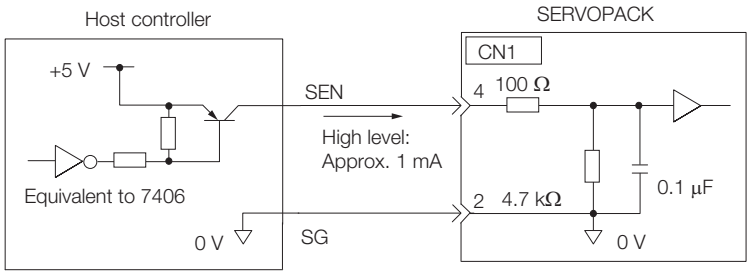

We recommend a PNP transistor.

◆ Allocating the SEN Signal to a General-Purpose Input

Type	Signal	Connector Pin No.	Signal Status	Meaning
Input	SEN	CN1-40 to CN1-46	OFF (open)	Does not request the position data from the absolute linear encoder. (This is the status after the power supply is turned ON.)
			ON (closed)	Requests the position data from the absolute linear encoder.

Refer to the following section for a circuit example for when the SEN signal is allocated to CN1-40 to CN1-46 on the I/O signal connector.

☞ ***Sequence Input Circuits*** on page 4-47

Refer to the following section for the procedure to allocate input signals.

☞ *6.1.1 **Input Signal Allocations*** on page 6-5

Sequence for Reading the Position Data from the Absolute Linear Encoder Using the SEN (Absolute Data Request) Signal

The sequence for using the SEN signal to read the position data from the absolute linear encoder of a Linear Servomotor is given below.

The upper 16-bit position data (with sign) are sent according to the transmission specifications.

The lower 20-bit data is output as a pulse train.

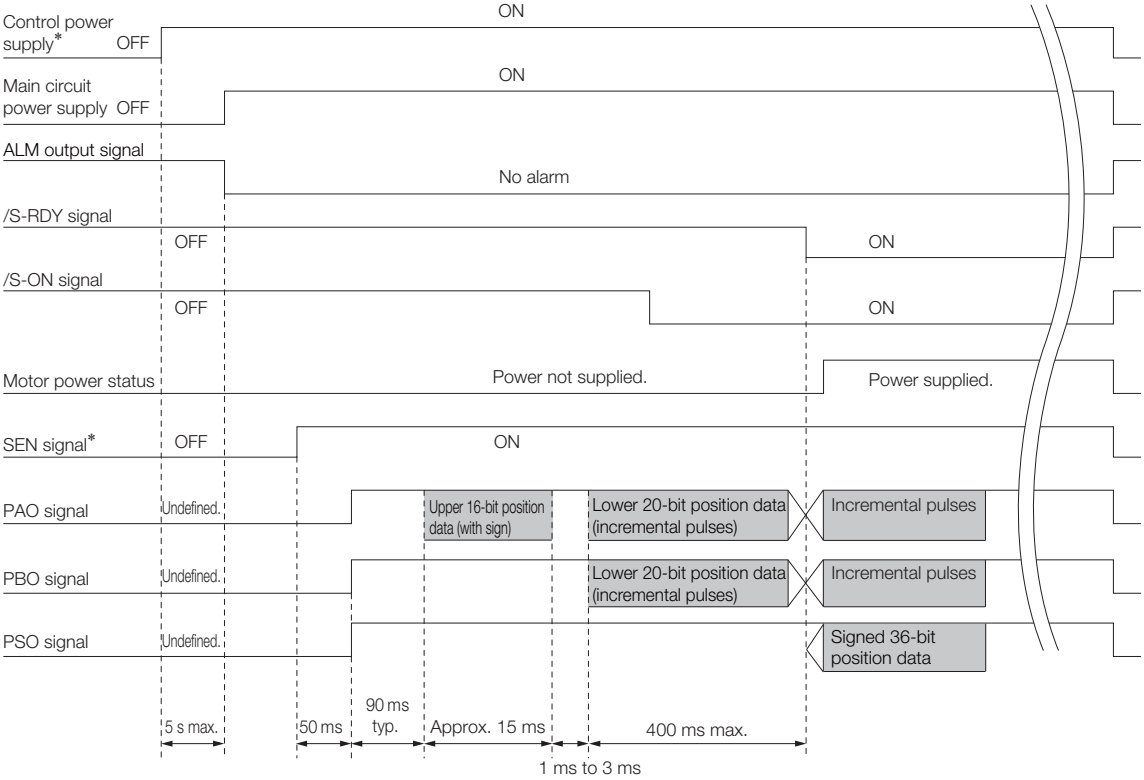

* When you turn OFF the control power supply, turn OFF the SEN signal.

Important

- Maintain the SEN signal at the high level for at least 1.3 seconds when you turn it OFF before you turn it ON again, as shown in the following figure.

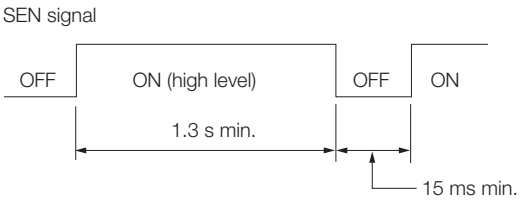

- The SEN signal is not acknowledged while the servo is ON.

Sequence for Reading the Position Data from the Absolute Encoder without Using the SEN (Absolute Data Request) Signal

The sequence for reading the position data from the absolute linear encoder of a Linear Servomotor without using the SEN signal is given below.

When the specified time has elapsed after the control power supply to the SERVOPACK is turned ON, the SERVOPACK will automatically read the position data from the absolute linear encoder.

The upper 16-bit position data (with sign) are sent according to the transmission specifications.

The lower 20-bit data is output as a pulse train.

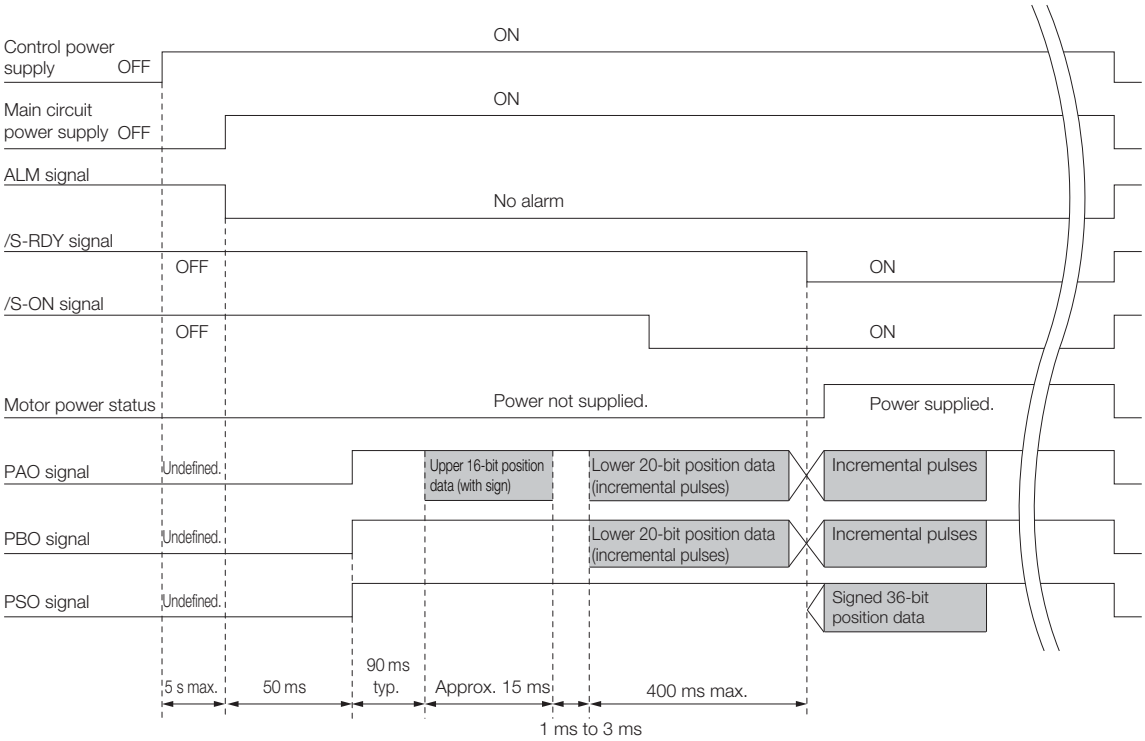

6.13.5 Transmission Specifications

The position data transmission specifications for the PAO (Encoder Divided Pulse Output) signal and the PSO (Absolute Encoder Position Output) signal are given in the following table.

The PAO signal sends only the 16-bit data (with sign). The PSO signal sends the signed 36-bit data.

Refer to the following section for the timing of sending the position data from the absolute encoder.

☞ *Sequence for Reading the Position Data from the Absolute Linear Encoder Using the SEN (Absolute Data Request) Signal* on page 6-92

☞ *Sequence for Reading the Position Data from the Absolute Encoder without Using the SEN (Absolute Data Request) Signal* on page 6-93

Item	PAO signal	PSO signal
Synchronization Method	Start-stop synchronization (ASYNC)	
Transmission Speed	9,600 bps	
Start Bits	1 bit	
Stop Bits	1 bit	
Parity	Even	
Character Code	ASCII, 7 bits	
Data Format	Refer to *Data Format of PAO Signal* on page 6-94.	Refer to *Data Format of PSO Signal* on page 6-94.
Data Output Period	Using the SEN Signal Each time the SEN signal is input after the control power supply is turned ON	40 ms
	Not Using the SEN Signal Only once after the control power supply is turned ON	

Data Format of PAO Signal

As shown below, the message format consists of eight characters: “P,” the sign, the 5-digit upper 15-bit position data, and “CR” (which indicates the end of the message).

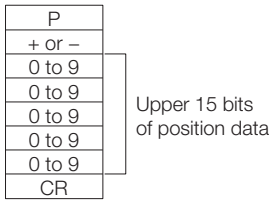

Data Format of PSO Signal

The data format for a Linear Servomotor consists of 17 characters: “P,” the sign, the 11-digit 35-bit data, and “CR” (which indicates the end of the message).

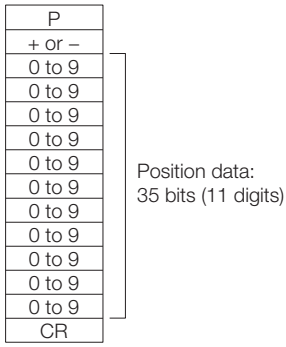

6.13.6 Calculating the Current Position in Machine Coordinates

With an absolute linear encoder, you must set the position of the origin (i.e., the origin of the machine coordinate system).

The host controller reads the coordinate from the origin of the encoder coordinate system. The host controller must record the value of this coordinate.

The method to calculate the coordinate value of the present position from the origin of the machine coordinate system is given below.

The position data from the absolute linear encoder is signed 36-bit data, but the upper 16 bits (with sign) and the lower 20 bits are output separately.

For the upper 16-bit data (with sign), the upper bits (16 bits, including the sign) of the current position after dividing by the setting of Pn281 are output with serial communications according to the transmission specifications.

For the lower 20-bit data, the lower bits (20 bits) of the current position after dividing by the setting of Pn281 are output as a pulse train.

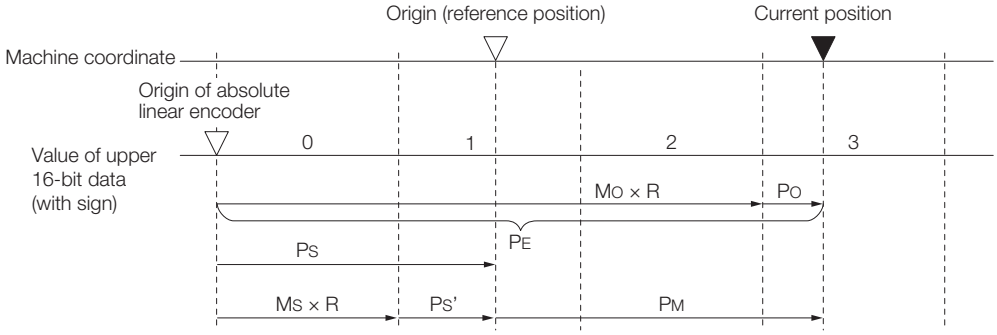

The current position P_M in the machine coordinate system is calculated as follows:

$P_M = P_E - P_S$

$P_E = M_O \times R + P_O$

$P_S = M_S \times R + P_S'$

Symbol	Meaning	Setting or Unit	
		Encoder Divided Pulse Output (PAO and PBO) Signals	Absolute Encoder Position Output (PSO) Signal
P_E	Position data for the current position of the absolute linear encoder	Encoder Output Resolution (Pn281)	Encoder pulses
M_O	Upper 16 bits (with sign) of the position data for the current position of the absolute linear encoder	–	–
P_O	Lower 20 bits of the position data for the current position of the absolute linear encoder	Encoder Output Resolution (Pn281)	Encoder pulses
P_S	Position data of the origin		
M_S	Upper 16 bits (with sign) of the position data of the origin	–	–
P_S'	Lower 20 bits of the position data of the origin	Encoder Output Resolution (Pn281)	Encoder pulses
P_M	Current position in machine coordinate system		
R	1048576 (=220)		

Note: The above formulas also apply in reverse movement mode (Pn000 = n.□□□1).

Information If you are using a Linear Servomotor, you do not need to reset the absolute linear encoder to define the origin. (Some absolute linear encoders also allow you to set any position as the origin.)

6.13.7 Alarm Output from the Output Ports for the Position Data from the Absolute Linear Encoder

Any alarm detected by the SERVOPACK is transmitted as alarm information to the host controller with the PAO (Encoder Divided Pulse Output) signal when the SEN (Absolute Data Request) signal turns OFF.

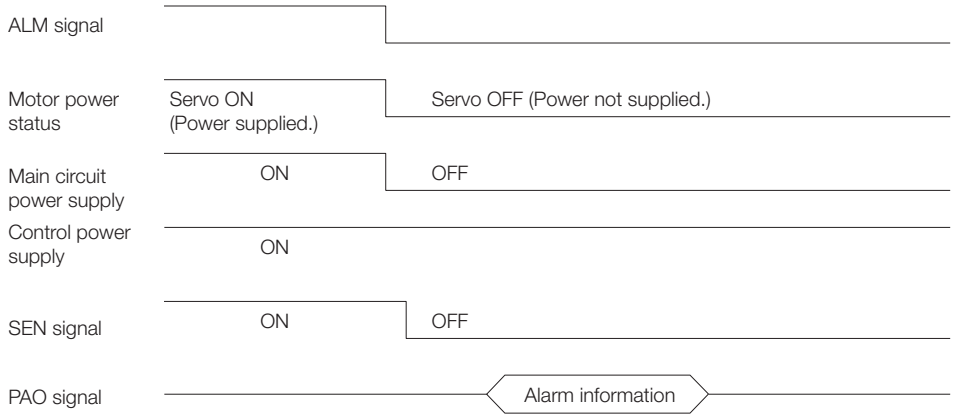

The data format of the alarm information is shown below.

A	
L	
M	
0 to 9	Upper two digits of alarm code
0 to 9	
.	
CR	

6.14 Software Reset

You can reset the SERVOPACK internally with the software. A software reset is used when resetting alarms and changing the settings of parameters that normally require turning the power supply to the SERVOPACK OFF and ON again. This can be used to change those parameters without turning the power supply to the SERVOPACK OFF and ON again.

Information

1. Always confirm that the servo is OFF and that the Servomotor is stopped before you start a software reset.
2. This function resets the SERVOPACK independently of the host controller. The SERVOPACK carries out the same processing as when the power supply is turned ON and outputs the ALM (Servo Alarm) signal. The status of other output signals may be forcibly changed.
3. When you execute a software reset, the SERVOPACK will not respond for approximately five seconds.
   Before you execute a software reset, check the status of the SERVOPACK and Servomotor and make sure that no problems will occur.

6.14.1 Preparations

Always check the following before you perform a software reset.

- The servo must be OFF.
- The motor must be stopped.

6.14.2 Applicable Tools

The following table lists the tools that you can use to perform a software reset.

Tool	Fn No./Function Name	Operating Procedure Reference
Panel Operator	Fn030	*13.4.25 Software Reset (Fn030)* on page 13-29
Digital Operator	Fn030	Σ-7-Series Digital Operator Operating Manual (Manual No.: SIEP S800001 33)
SigmaWin+	***Basic Functions* – *Software Reset***	*6.14.3 Operating Procedure* on page 6-97

6.14.3 Operating Procedure

Use the following procedure to perform a software reset.

1. Click the Servo Drive Button in the workspace of the Main Window of the SigmaWin+.

2. Select **Software Reset** in the Menu Dialog Box.
The Software Reset Dialog Box will be displayed.

3. Click the **Execute** Button.

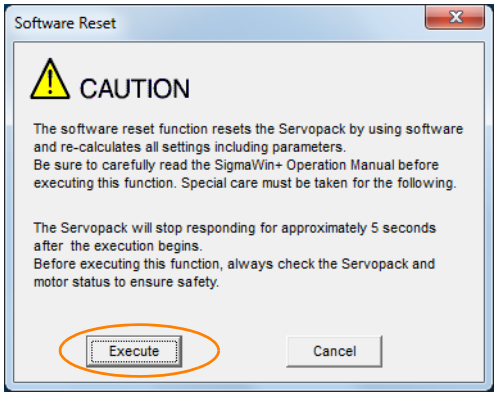

Click the **Cancel** Button to cancel the software reset. The Main Window will return.

4. Click the **Execute** Button.

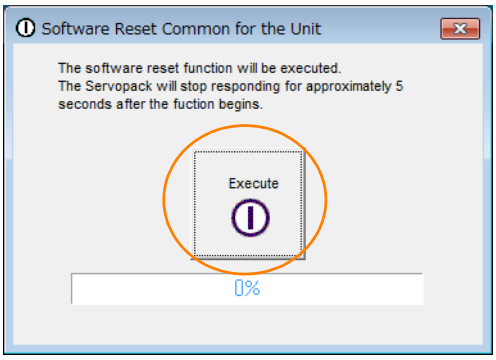

5. Click the **OK** Button to end the software reset operation.
All settings including parameters will have been re-calculated. When you finish this operation, disconnect the SigmaWin+ from the SERVOPACK, and then connect it again.

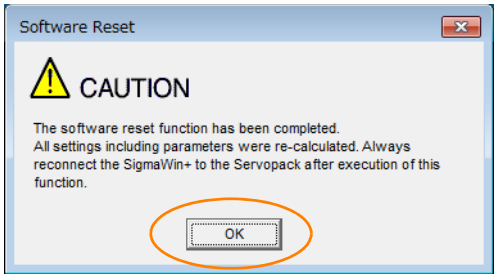

This concludes the procedure to reset the software.

6.15 Initializing the Vibration Detection Level

You can detect machine vibration during operation to automatically adjust the settings of Pn312 or Pn384 (Vibration Detection Level) to detect A.520 alarms (Vibration Alarm) and A.911 warnings (Vibration) more precisely.

This function detects specific vibration components in the Servomotor speed.

Parameter		Meaning	When Enabled	Classification
Pn310	n.□□□0 (default setting)	Do not detect vibration.	Immediately	Setup
	n.□□□1	Output a warning (A.911) if vibration is detected.		
	n.□□□2	Output an alarm (A.520) if vibration is detected.		

If the vibration exceeds the detection level calculated with the following formula, an alarm or warning occurs according to Pn310 (Vibration Detection Selection).

- Rotary Servomotors

$$\text{Detection level} = \frac{\text{Vibration detection level (Pn312 [min-1])} \times \text{Vibration detection sensitivity (Pn311 [\%])}}{100}$$

- Linear Servomotors

$$\text{Detection level} = \frac{\text{Vibration detection level (Pn384 [mm/s])} \times \text{Vibration detection sensitivity (Pn311 [\%])}}{100}$$

Use this function only if A.520 or A.911 alarms are not output at the correct times when vibration is detected with the default vibration detection level (Pn312 or Pn384).

There will be discrepancies in the detection sensitivity for vibration alarms and warnings depending on the condition of your machine. If there is a discrepancy, use the above formula to adjust Pn311 (Vibration Detection Sensitivity).

Pn311	Vibration Detection Sensitivity			Speed Position Torque	
	Setting Range	Setting Unit	Default Setting	When Enabled	Classification
	50 to 500	1%	100	Immediately	Tuning

Information

1. Vibration may not be detected because of unsuitable servo gains. Also, not all kinds of vibrations can be detected.
2. Set a suitable moment of inertia ratio (Pn103). An unsuitable setting may result in falsely detecting or not detecting vibration alarms or vibration warnings.
3. To use this function, you must input the actual references that will be used to operate your system.
4. Execute this function under the operating conditions for which you want to set the vibration detection level.
5. Execute this function while the Servomotor is operating at 10% of its maximum speed or faster.

6.15.1 Preparations

Always check the following before you initialize the vibration detection level.

- The parameters must not be write prohibited.
- The test without a motor function must be disabled (Pn00C = n.□□□0).

6.15.2 Applicable Tools

The following table lists the tools that you can use to initialize the vibration detection level.

Tool	Fn No./Function Name	Operating Procedure Reference
Panel Operator	Fn01B	*13.4.20 Initialize Vibration Detection Level (Fn01B)* on page 13-27
Digital Operator	Fn01B	Σ-7-Series Digital Operator Operating Manual (Manual No.: SIEP S800001 33)
SigmaWin+	***Others – Initialize Vibration Detection Level***	*6.15.3 Operating Procedure* on page 6-100

6.15.3 Operating Procedure

Use the following procedure to initialize the vibration detection level.

1. Click the Servo Drive Button in the workspace of the Main Window of the SigmaWin+.
2. Select **Initialize Vibration Detection Level** in the Menu Dialog Box.
   The Initialize Vibration Detection Level Dialog Box will be displayed.
3. Select **Pn311: Vibration Detection Sensitivity** and **Pn310: Vibration Detection Selections** and then click the **Detection Start** Button.
   A setting execution standby mode will be entered.

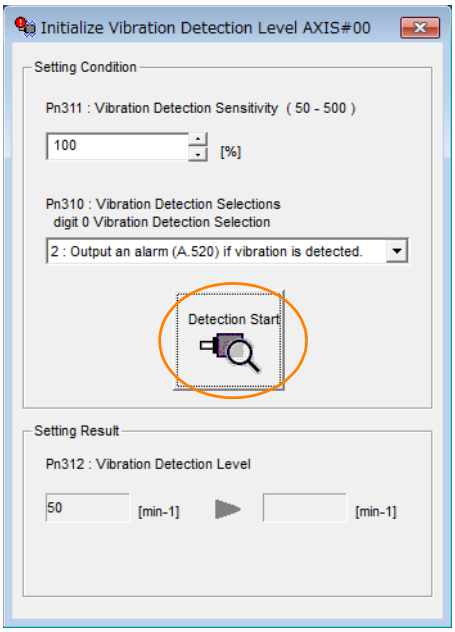

4. Click the **Execute** Button.

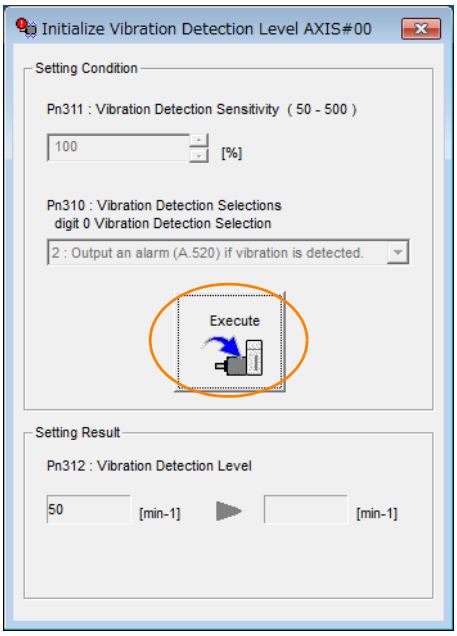

The newly set vibration detection level will be displayed and the value will be saved in the SERVO-PACK.

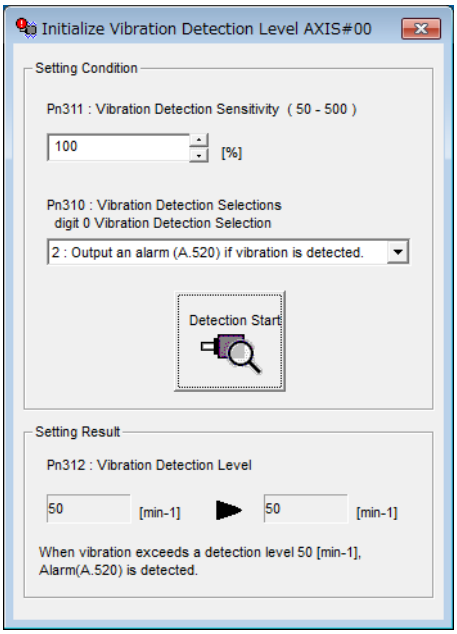

This concludes the procedure to initialize the vibration detection level.

6.15.4 Related Parameters

The following three items are given in the following table.

- Parameters Related to this Function
  These are the parameters that are used or referenced when this function is executed.
- Changes during Function Execution
  Not allowed: The parameter cannot be changed using the SigmaWin+ or other tool while this function is being executed.
  Allowed: The parameter can be changed using the SigmaWin+ or other tool while this function is being executed.
- Automatic Changes after Function Execution
  Yes: The parameter is automatically set or adjusted after execution of this function.
  No: The parameter is not automatically set or adjusted after execution of this function.

Parameter	Name	Setting Changes	Automatic Changes
Pn311	Vibration Detection Sensitivity	Allowed	No
Pn312	Vibration Detection Level	Not allowed	Yes
Pn384	Vibration Detection Level	Not allowed	Yes

6.16 Adjusting the Motor Current Detection Signal Offset

The motor current detection signal offset is used to reduce ripple in the torque. You can adjust the motor current detection signal offset either automatically or manually.

6.16.1 Automatic Adjustment

Perform this adjustment only if highly accurate adjustment is required to reduce torque ripple. It is normally not necessary to adjust this offset.

Important

Execute the automatic offset adjustment if the torque ripple is too large when compared with other SERVOPACKs.

Information

The offset does not use a parameter, so it will not change even if the parameter settings are initialized.

Preparations

Always check the following before you automatically adjust the motor current detection signal offset.

- The parameters must not be write prohibited.
- The servo must be in ready status.
- The servo must be OFF.

Applicable Tools

The following table lists the tools that you can use to automatically adjust the offset.

Tool	Fn No./Function Name	Operating Procedure Reference
Panel Operator	Fn00E	*13.4.13 Autotune Motor Current Detection Signal Offset (Fn00E)* on page 13-21
Digital Operator	Fn00E	Σ-7-Series Digital Operator Operating Manual (Manual No.: SIEP S800001 33)
SigmaWin+	***Others – Adjust the Motor Current Detection Offset***	*Operating Procedure* on page 6-103

Operating Procedure

Use the following procedure to automatically adjust the motor current detection signal offset.

1. Click the Servo Drive Button in the workspace of the Main Window of the SigmaWin+.
2. Select **Adjust the Motor Current Detection Offset** in the Menu Dialog Box.
   The Adjust the Motor Current Detection Signal Offsets Dialog Box will be displayed.

3. Click the **Continue** Button.

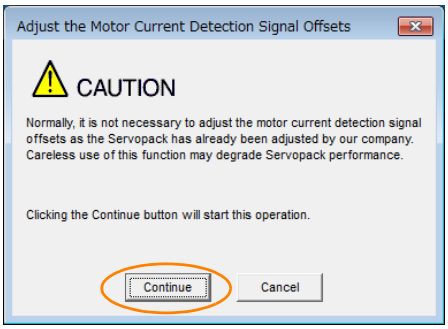

4. Click the **Automatic Adjustment** Tab in the Adjust the Motor Current Detection Signal Offsets Dialog Box.

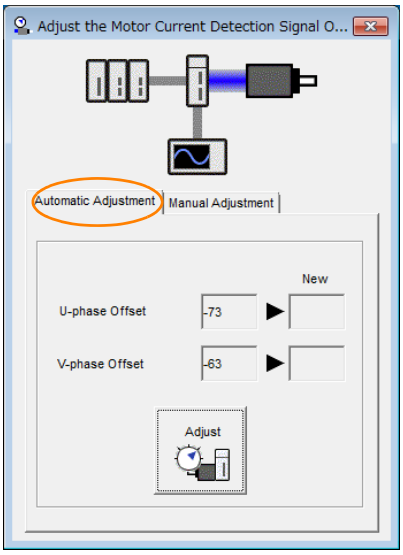

5. Click the **Adjust** Button.
The values that result from automatic adjustment will be displayed in the **New** Boxes.

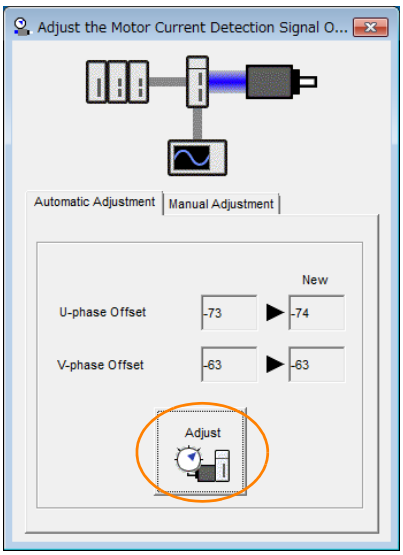

This concludes the procedure to automatically adjust the motor current detection signal offset.

6.16.2 Manual Adjustment

You can use this function if you automatically adjust the motor current detection signal offset and the torque ripple is still too large.

> **Important**
> If the offset is incorrectly adjusted with this function, the Servomotor characteristics may be adversely affected.
> Observe the following precautions when you manually adjust the offset.
> - Operate the Servomotor at a speed of approximately 100 min^{-1}.
> - Adjust the offset while monitoring the torque reference with the analog monitor until the ripple is minimized.
> - Adjust the offsets for the phase-U current and phase-V current of the Servomotor so that they are balanced. Alternately adjust both offsets several times.

Information The offset does not use a parameter, so it will not change even if the parameter settings are initialized.

Preparations

Always check the following before you manually adjust the motor current detection signal offset.

- The parameters must not be write prohibited.

Applicable Tools

The following table lists the tools that you can use to manually adjust the offset.

Tool	Fn No./Function Name	Operating Procedure Reference
Panel Operator	Fn00F	*13.4.14 Manually Adjust Motor Current Detection Signal Offset (Fn00F)* on page 13-22
Digital Operator	Fn00F	Σ-7-Series Digital Operator Operating Manual (Manual No.: SIEP S800001 33)
SigmaWin+	***Others – Adjust the Motor Current Detection Offset***	*Operating Procedure* on page 6-105

Operating Procedure

Use the following procedure to manually adjust the motor current detection signal offset.

1. Operate the Servomotor at approximately 100 min^{-1}.
2. Click the Servo Drive Button in the workspace of the Main Window of the SigmaWin+.
3. Select **Adjust the Motor Current Detection Offset** in the Menu Dialog Box.
   The Adjust the Motor Current Detection Signal Offsets Dialog Box will be displayed.
4. Click the **Continue** Button.

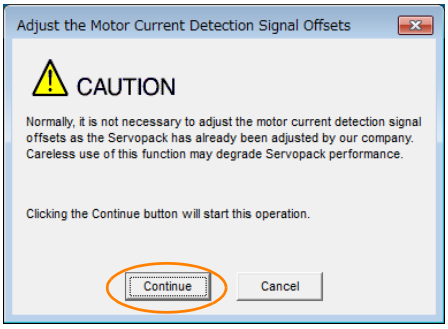

5. Click the **Manual Adjustment** Tab in the Adjust the Motor Current Detection Signal Offsets Dialog Box.

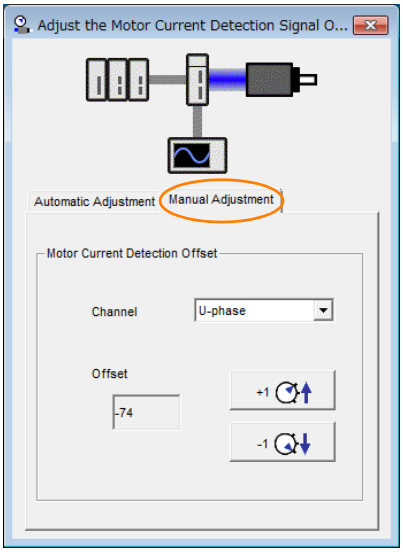

6. Set the **Channel** Box in the **Motor Current Detection Offset** Area to **U-phase**.

7. Use the **+1** and **-1** Buttons to adjust the offset for phase U.
   Change the offset by about 10 in the direction that reduces the torque ripple.
   Adjustment range: -512 to +511

8. Set the **Channel** Box in the **Motor Current Detection Offset** Area to V-**phase**.

9. Use the **+1** and **-1** Buttons to adjust the offset for phase V.
   Change the offset by about 10 in the direction that reduces the torque ripple.

10. Repeat steps 6 to 9 until the torque ripple cannot be decreased any further regardless of whether you increase or decrease the offsets.

11. Reduce the amount by which you change the offsets each time and repeat steps 6 to 9.

This concludes the procedure to manually adjust the motor current detection signal offset.

6.17 Forcing the Motor to Stop

You can force the Servomotor to stop for a signal from the host controller or an external device.

To force the motor to stop, you must allocate the FSTP (Forced Stop Input) signal in Pn516 = n.□□□X. You can specify one of the following stopping methods: dynamic brake (DB), coasting to a stop, or decelerating to a stop.

Note: Forcing the motor to stop is not designed to comply with any safety standard. In this respect, it is different from the hard wire base block (HWBB).

Information **Panel Display and Digital Operator Display**
When a forced stop is performed, the panel display will display FST and the Digital Operator will display FSTP.

⚠ CAUTION

- To prevent accidents that may result from contact faults or disconnections, use a normally closed switch for the Forced Stop Input signal.

6.17.1 FSTP (Forced Stop Input) Signal

Classification	Signal	Connector Pin No.	Signal Status	Description
Input	FSTP	Must be allocated.	ON (closed)	Drive is enabled (normal operation).
			OFF (open)	The motor is stopped.

Note: You must allocate the FSTP signal to use it. Use Pn516 = n.□□□X (FSTP (Forced Stop Input) Signal Allocation) to allocate the FSTP signal to a connector pin. Refer to the following section for details.
☞ *6.1.1 Input Signal Allocations* on page 6-5

6.17.2 Stopping Method Selection for Forced Stops

Use Pn00A = n.□□X□ (Stopping Method for Forced Stops) to set the stopping method for forced stops.

Parameter		Description	When Enabled	Classification
Pn00A	n.□□0□	Apply the dynamic brake or coast the motor to a stop (use the stopping method set in Pn001 = n.□□□X).	After restart	Setup
	n.□□1□ (default setting)	Decelerate the motor to a stop using the torque set in Pn406 as the maximum torque. Use the setting of Pn001 = n.□□□X for the status after stopping.		
	n.□□2□	Decelerate the motor to a stop using the torque set in Pn406 as the maximum torque and then let the motor coast.		
	n.□□3□	Decelerate the motor to a stop using the deceleration time set in Pn30A. Use the setting of Pn001 = n.□□□X for the status after stopping.		
	n.□□4□	Decelerate the motor to a stop using the deceleration time set in Pn30A and then let the motor coast.		

Note: You cannot decelerate a Servomotor to a stop during torque control. For torque control, the Servomotor will be stopped with the dynamic braking or coast to a stop according to the setting of Pn001 = n.□□□X (Motor Stopping Method for Servo OFF and Group 1 Alarms).

Stopping the Servomotor by Setting Emergency Stop Torque (Pn406)

To stop the Servomotor by setting emergency stop torque, set Pn406 (Emergency Stop Torque).

If Pn00A = n.□□X□ is set to 1 or 2, the Servomotor will be decelerated to a stop using the torque set in Pn406 as the maximum torque.

The default setting is 800%. This setting is large enough to allow you to operate the Servomotor at the maximum torque. However, the maximum emergency stop torque that you can actually use is the maximum torque of the Servomotor.

Pn406	Emergency Stop Torque			Speed Position	
	Setting Range	Setting Unit	Default Setting	When Enabled	Classification
	0 to 800	1%*	800	Immediately	Setup

* Set a percentage of the motor rated torque.

Stopping the Servomotor by Setting the Deceleration Time for Servo OFF and Forced Stops (Pn30A)

To specify the Servomotor deceleration time and use it to stop the Servomotor, set Pn30A (Deceleration Time for Servo OFF and Forced Stops).

Pn30A	Deceleration Time for Servo OFF and Forced Stops			Speed Position	
	Setting Range	Setting Unit	Default Setting	When Enabled	Classification
	0 to 10,000	1 ms	0	Immediately	Setup

If you set Pn30A to 0, the Servomotor will be stopped with a zero speed.

The deceleration time that you set in Pn30A is the time to decelerate the Servomotor from the maximum motor speed.

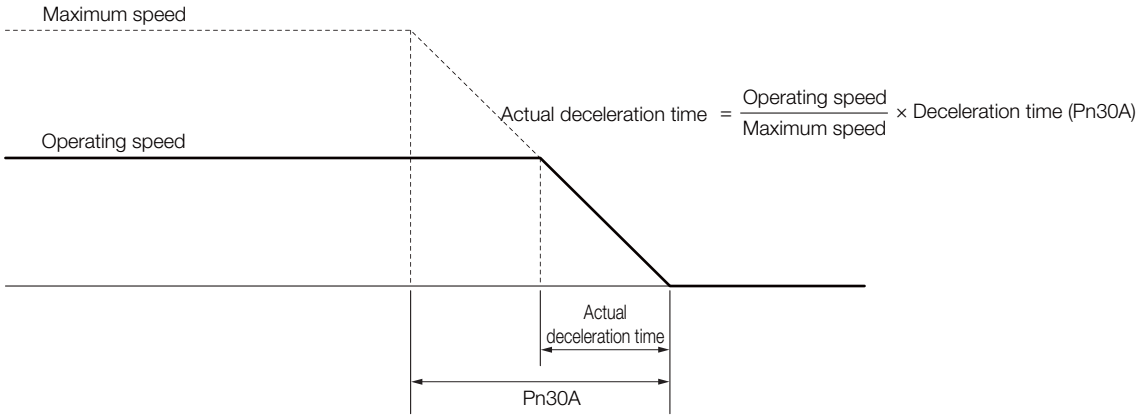

6.17.3 Resetting Method for Forced Stops

This section describes the reset methods that can be used after stopping operation for an FSTP (Forced Stop Input) signal.

If the FSTP (Forced Stop Input) signal is OFF and the /S-ON (Servo ON Input) signal is input, the forced stop state will be maintained even after the FSTP signal is turned ON.
Turn OFF the /S-ON signal to place the SERVOPACK in the base block (BB) state and then turn ON the /S-ON signal again.

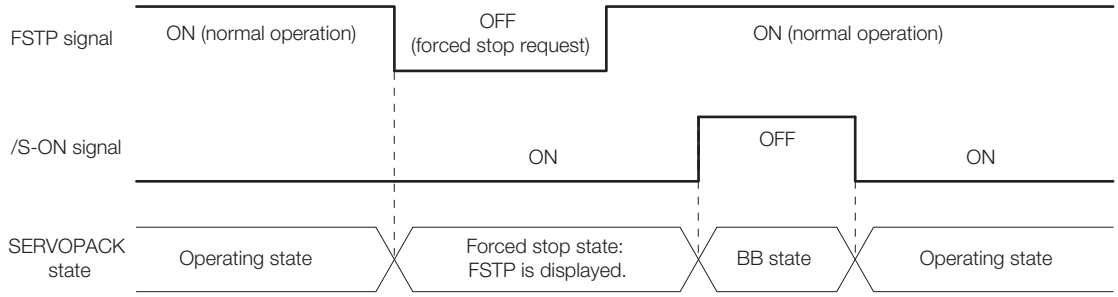

6.18 Overheat Protection

Overheat protection detects an A.93B warning (Overheat Warning) and an A.862 alarm (Overheat Alarm) by monitoring the overheat protection input signal from a Yaskawa SGLFW2 Linear Servomotor or from a sensor attached to the machine.

SERVOPACKs with software version 0023 or higher support overheat protection.

When you use overheat protection, you must wire the overheat protection input (TH) signal and select overheat protection (Pn61A = n.□□□X).

6.18.1 Connecting the Overheat Protection Input (TH) Signal

To use overheat protection, you must connect an overheat protection input (TH) signal to the SERVOPACK. This section describes the connection methods for the overheat protection input (TH) signal.

Using Overheat Protection in the Linear Servomotor

◆ When Using a Serial Converter Unit

Connect the connector for the polarity sensor (hall sensor) and thermal protector of the linear servomotor to the serial converter unit.

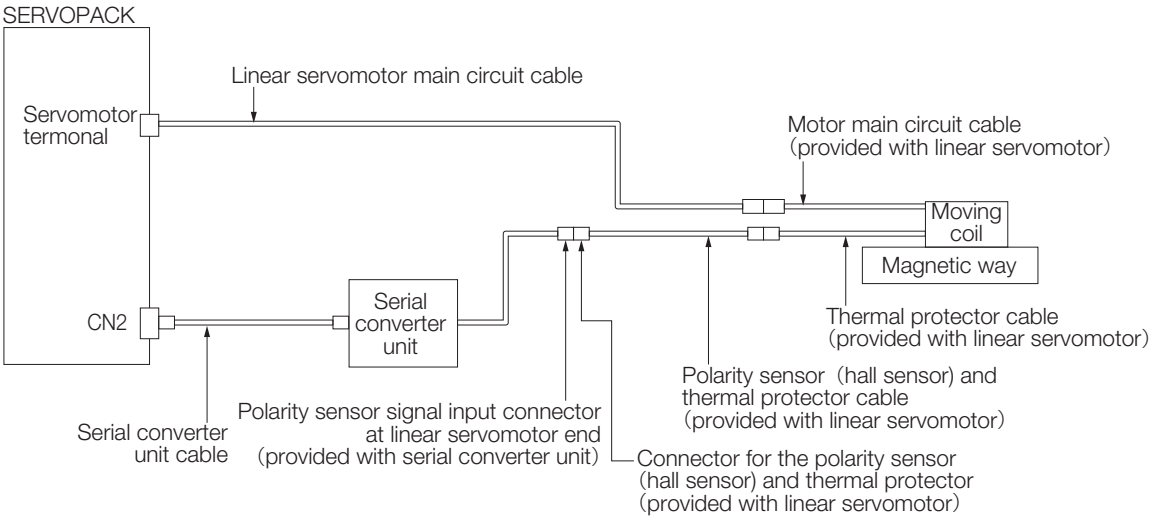

Using Overheat Protection for the Machine

To use overheat protection for the machine, connect the overheat protection input (an analog voltage input) from the sensor mounted to the machine to the CN1-50 on the SERVOPACK.

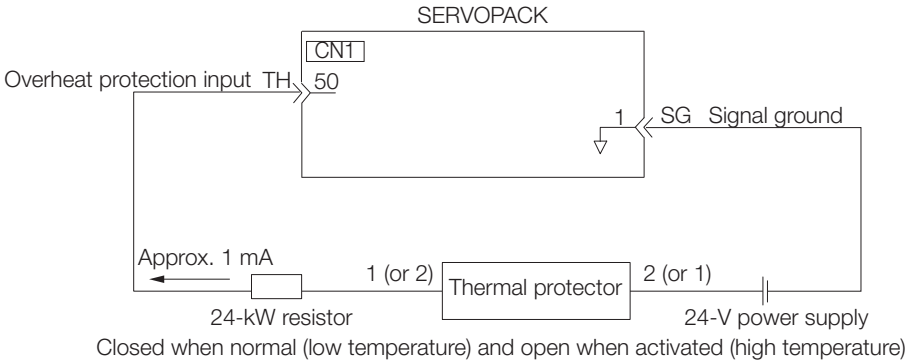

Important

- The recommended length of the thermal protector cable is 15 m maximum.
- The 24-V power supply and 24-kΩ resistor are not provided by Yaskawa.
  Use a 0.3 W or greater 24-V power supply, and use a 0.2 W or greater 24-kΩ resistor.
- Be sure to connect the positive and negative sides of the power supply correctly. Otherwise there is a risk of SERVOPACK failure.

6.18.2 Overheat Protection Selection

The overheat protection function is selected with Pn61A = n.□□□X (Overheat Protection Selections).

Parameter		Meaning	When Enabled	Classification
Pn61A	n.□□□0 (default setting)	Disable overheat protection.	After restart	Setup
	n.□□□1	Use overheat protection in the Yaskawa Linear Servomotor.*		
	n.□□□2	Monitor a negative voltage input from a sensor attached to the machine and use overheat protection.		
	n.□□□3	Monitor a positive voltage input from a sensor attached to the machine and use overheat protection.		

* The SGLFW2 is the only Yaskawa Linear Servomotor that supports this function.

Using Overheat Protection in the Yaskawa Linear Servomotor

To use the overheat protection in the Yaskawa Linear Servomotor (SGLFW2), set Pn61A to n.□□□1.

An A.93B warning (Overheat Warning) will be detected if the overheat protection input (TH) signal from the Yaskawa SGLFW2 Linear Servomotor exceeds the warning temperature.

An A.862 alarm (Overheat Alarm) will be detected if the overheat protection input (TH) signal from the Yaskawa SGLFW2 Linear Servomotor exceeds the alarm temperature.

Important

- If the overheat protection input signal line is disconnected or short-circuited, an A.862 alarm will occur.
- If you set Pn61A to n.□□□1 (Use overheat protection in the Yaskawa Linear Servomotor), the parameters in the Servomotor are enabled and the following parameters are disabled.
  - Overheat Alarm Level (Pn61B)
  - Overheat Warning Level (Pn61C)
  - Overheat Alarm Filter Time (Pn61D)

Monitoring the Machine's Temperature and Using Overheat Protection

Set Pn61A = n.□□□X to 2 or 3 to use overheat protection for the machine.

Set the following parameters as required.

Pn61B	Overheat Alarm Level			Speed Position Torque	
	Setting Range	Setting Unit	Default Setting	When Enabled	Classification
	0 to 500	0.01 V	250	Immediately	Setup
Pn61C	Overheat Warning Level			Speed Position Torque	
	Setting Range	Setting Unit	Default Setting	When Enabled	Classification
	0 to 100	1%	100	Immediately	Setup
Pn61D	Overheat Alarm Filter Time			Speed Position Torque	
	Setting Range	Setting Unit	Default Setting	When Enabled	Classification
	0 to 65,535	1 s	0	Immediately	Setup

Important

- When Pn61A is set to n.□□□2, an A.862 alarm will occur if the overheat protection input signal line is disconnected or short-circuited.
- When Pn61A is set to n.□□□3, an A862 alarm will not occur if the overheat protection input signal line is disconnected or short-circuited. To ensure safety, we recommend that you connect the external circuits so that you can use a negative voltage input for the overheat protection input (an analog voltage input).

Trial Operation and Actual Operation

7

This chapter provides information on the flow and procedures for trial operation and convenient functions to use during trial operation.

7.1 Flow of Trial Operation 7-2

7.1.1 Flow of Trial Operation for Rotary Servomotors . . 7-2
7.1.2 Flow of Trial Operation for Linear Servomotors . . 7-4

7.2 Inspections and Confirmations before Trial Operation . . 7-6

7.3 Trial Operation for the Servomotor without a Load . . 7-7

7.3.1 Preparations 7-7
7.3.2 Applicable Tools 7-8
7.3.3 Operating Procedure 7-8

7.4 Trial Operation from the Host Controller for the Servomotor without a Load . . 7-10

7.4.1 Preparing the Servomotor for Trial Operation . . 7-11
7.4.2 Trial Operation for Speed Control 7-13
7.4.3 Trial Operation for Position Control from the Host Controller with the SERVOPACK Used for Speed Control 7-14
7.4.4 Trial Operation for Position Control 7-15

7.5 Trial Operation with the Servomotor Connected to the Machine . . 7-17

7.5.1 Precautions 7-17
7.5.2 Preparations 7-18
7.5.3 Operating Procedure 7-18

7.6 Convenient Function to Use during Trial Operation . . 7-20

7.6.1 Program Jogging 7-20
7.6.2 Origin Search 7-25
7.6.3 Test without a Motor 7-27

7.1 Flow of Trial Operation

7.1.1 Flow of Trial Operation for Rotary Servomotors

The procedure for trial operation is given below.

- Preparations for Trial Operation

Step	Meaning	Reference
1	Installation Install the Servomotor and SERVOPACK according to the installation conditions. First, operation is checked with no load. Do not connect the Servomotor to the machine.	☞ *Chapter 3 SERVOPACK Installation*
2	Wiring and Connections Wire and connect the SERVOPACK. First, Servomotor operation is checked without a load. Do not connect the CN1 connector on the SERVOPACK.	☞ *Chapter 4 Wiring and Connecting SERVOPACKs*
3	Confirmations before Trial Operation	☞ *7.2 Inspections and Confirmations before Trial Operation* on page 7-6
4	Power ON	–
5	Resetting the Absolute Encoder This step is necessary only for a Servomotor with an Absolute Encoder.	☞ *5.17 Resetting the Absolute Encoder* on page 5-52

• Trial Operation

Step	Meaning	Reference
1	Trial Operation for the Servomotor without a Load 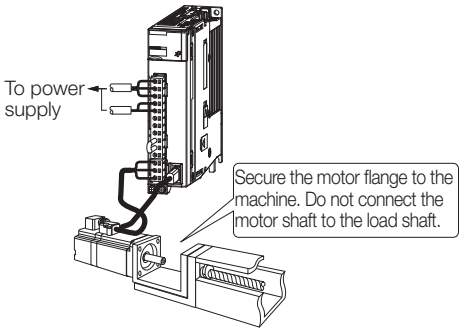 	☞ *7.3 Trial Operation for the Servomotor without a Load* on page 7-7
2	Trial Operation from the Host Controller for the Servomotor without a Load 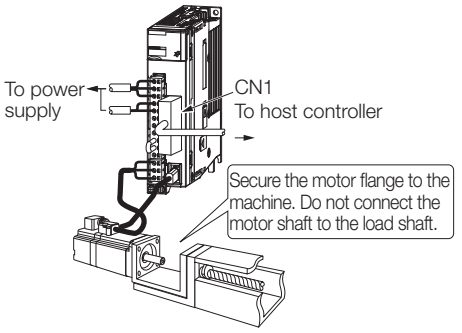 	☞ *7.4 Trial Operation from the Host Controller for the Servomotor without a Load* on page 7-10
3	Trial Operation with the Servomotor Connected to the Machine 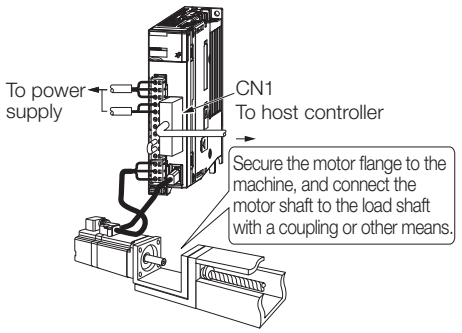 	☞ *7.5 Trial Operation with the Servomotor Connected to the Machine* on page 7-17

7.1.2 Flow of Trial Operation for Linear Servomotors

The procedure for trial operation is given below.

- Preparations for Trial Operation

Step	Meaning	Reference
1	Installation Install the Servomotor and SERVOPACK according to the installation conditions. First, operation is checked with no load. Do not connect the Servomotor to the machine.	☞ *Chapter 3 SERVOPACK Installation*
2	Wiring and Connections Wire and connect the SERVOPACK. First, Servomotor operation is checked without a load. Do not connect the CN1 connector on the SERVOPACK.	☞ *Chapter 4 Wiring and Connecting SERVOPACKs*
3	Confirmations before Trial Operation	☞ *7.2 Inspections and Confirmations before Trial Operation* on page 7-6
4	Power ON	–
5	Setting Parameters in the SERVOPACK	
6	Setting the Origin of the Absolute Linear Encoder	☞ *5.18.1 Setting the Origin of the Absolute Linear Encoder* on page 5-55

Step	No. of Parameter to Set	Description	Remarks	Reference
5-1	Pn282	Linear Encoder Scale Pitch	Set this parameter only if you are using a Serial Converter Unit.	page 5-19
5-2	–	Writing Parameters to the Linear Servomotor	Set this parameter only if you are not using a Serial Converter Unit.	page 5-20
5-3	Pn080 = n.□□X□	Motor Phase Sequence Selection	–	page 5-24
5-4	Pn080 = n.□□□X	Polarity Sensor Selection	–	page 5-26
5-5	–	Polarity Detection	This step is necessary only for a Linear Servomotor with a Polarity Sensor.	page 5-27
5-6	Pn50A = n.X□□□ and Pn50B = n.□□□X	Overtravel Signal Allocations	–	page 5-31
5-7	Pn483, Pn484	Force Control	–	page 6-64

• Trial Operation

Step	Meaning	Reference
1	Trial Operation for the Servomotor without a Load 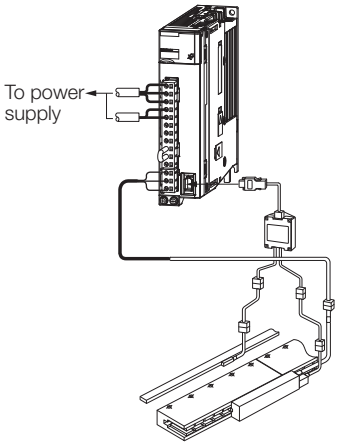	☞ *7.3 Trial Operation for the Servomotor without a Load* on page 7-7
2	Trial Operation from the Host Controller for the Servomotor without a Load 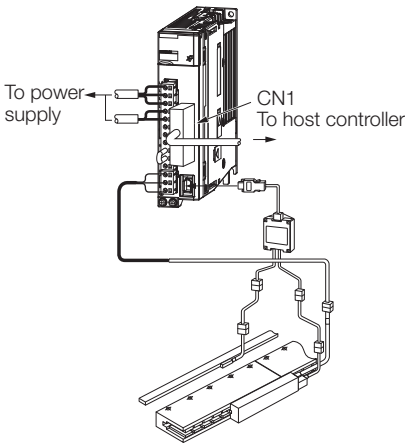	☞ *7.4 Trial Operation from the Host Controller for the Servomotor without a Load* on page 7-10
3	Trial Operation with the Servomotor Connected to the Machine 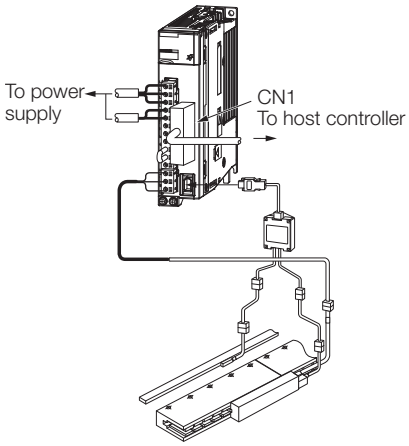	☞ *7.5 Trial Operation with the Servomotor Connected to the Machine* on page 7-17

7.2 Inspections and Confirmations before Trial Operation

To ensure safe and correct trial operation, check the following items before you start trial operation.

- Make sure that the SERVOPACK and Servomotor are installed, wired, and connected correctly.
- Make sure that the correct power supply voltage is supplied to the SERVOPACK.
- Make sure that there are no loose parts in the Servomotor mounting.
- If you are using a Servomotor with an Oil Seal, make sure that the oil seal is not damaged. Also make sure that oil has been applied.
- If you are performing trial operation on a Servomotor that has been stored for a long period of time, make sure that all Servomotor inspection and maintenance procedures have been completed.
  Refer to the manual for your Servomotor for Servomotor maintenance and inspection information.
- If you are using a Servomotor with a Holding Brake, make sure that the brake is released in advance. To release the brake, you must apply the specified voltage of 24 VDC to the brake. A circuit example for trial operation is provided below.

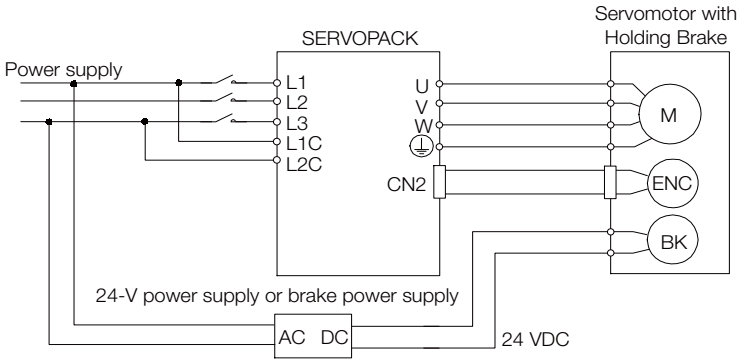

7.3 Trial Operation for the Servomotor without a Load

You use jogging for trial operation of the Servomotor without a load.

Jogging is used to check the operation of the Servomotor without connecting the SERVOPACK to the host controller. The Servomotor is moved at the preset jogging speed.

⚠ CAUTION

- During jogging, the overtravel function is disabled. Consider the range of motion of your machine when you jog the Servomotor.

Important

The tuning-less function is enabled as the default setting. When the tuning-less function is enabled, gain will increase and vibration may occur if the Servomotor is operated with no load. If vibration occurs, disable the tuning-less function (Pn170 = n.□□□0).

7.3.1 Preparations

Always check the following before you execute jogging.

- The parameters must not be write prohibited.
- The main circuit power supply must be ON.
- There must be no alarms.
- There must be no hard wire base block (HWBB).
- The servo must be OFF.
- The jogging speed must be set considering the operating range of the machine.
  The jogging speed is set with the following parameters.
  - Rotary Servomotors

Pn304	Jogging Speed			Speed Position Torque	
	Setting Range	Setting Unit	Default Setting	When Enabled	Classification
	0 to 10,000	1 min^{-1}	500	Immediately	Setup
Pn305	Soft Start Acceleration Time			Speed	
	Setting Range	Setting Unit	Default Setting	When Enabled	Classification
	0 to 10,000	1 ms	0	Immediately	Setup
Pn306	Soft Start Deceleration Time			Speed	
	Setting Range	Setting Unit	Default Setting	When Enabled	Classification
	0 to 10,000	1 ms	0	Immediately	Setup

  - Direct Drive Servomotors

Pn304	Jogging Speed			Speed Position Torque	
	Setting Range	Setting Unit	Default Setting	When Enabled	Classification
	0 to 10,000	0.1 min^{-1}	500	Immediately	Setup
Pn305	Soft Start Acceleration Time			Speed	
	Setting Range	Setting Unit	Default Setting	When Enabled	Classification
	0 to 10,000	1 ms	0	Immediately	Setup
Pn306	Soft Start Deceleration Time			Speed	
	Setting Range	Setting Unit	Default Setting	When Enabled	Classification
	0 to 10,000	1 ms	0	Immediately	Setup

- Linear Servomotors

Pn383	Jogging Speed			Speed Position Force	
	Setting Range	Setting Unit	Default Setting	When Enabled	Classification
	0 to 10,000	1 mm/s	50	Immediately	Setup
Pn305	Soft Start Acceleration Time			Speed	
	Setting Range	Setting Unit	Default Setting	When Enabled	Classification
	0 to 10,000	1 ms	0	Immediately	Setup
Pn306	Soft Start Deceleration Time			Speed	
	Setting Range	Setting Unit	Default Setting	When Enabled	Classification
	0 to 10,000	1 ms	0	Immediately	Setup

Information When an absolute encoder is used, you do not need to input the SEN signal. It is always active.

7.3.2 Applicable Tools

The following table lists the tools that you can use to perform jogging.

Tool	Fn No./Function Name	Operating Procedure Reference
Panel Operator	Fn002	*13.4.2 Jog (Fn002)* on page 13-13
Digital Operator	Fn002	Σ-7-Series Digital Operator Operating Manual (Manual No.: SIEP S800001 33)
SigmaWin+	***Operation - Jog***	*Operating Procedure* on page 7-8

7.3.3 Operating Procedure

Use the following procedure to jog the motor.

1. Click the Servo Drive Button in the workspace of the Main Window of the SigmaWin+.
2. Select **JOG** in the Menu Dialog Box.
   The Jog Operation Dialog Box will be displayed.
3. Read the warnings and then click the **OK** Button.

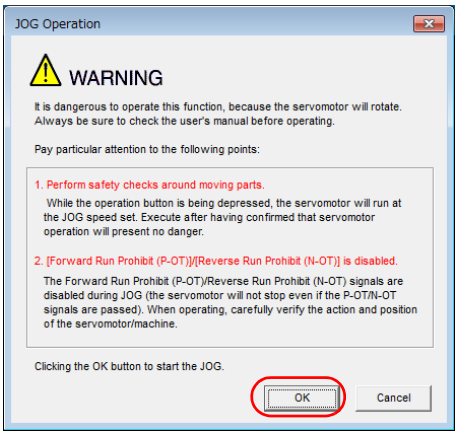

4. Check the jogging speed and then click the **Servo ON** Button.

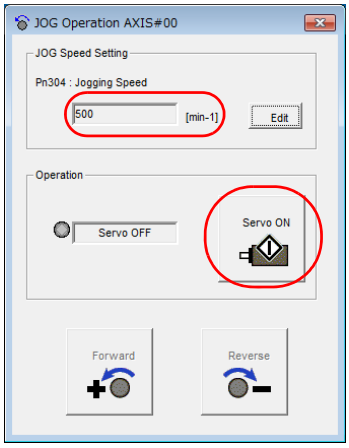

The display in the **Operation** Area will change to **Servo ON**.

Information To change the speed, click the **Edit** Button and enter the new speed.

5. Click the **Forward** Button or the **Reverse** Button.
Jogging will be performed only while you hold down the mouse button.

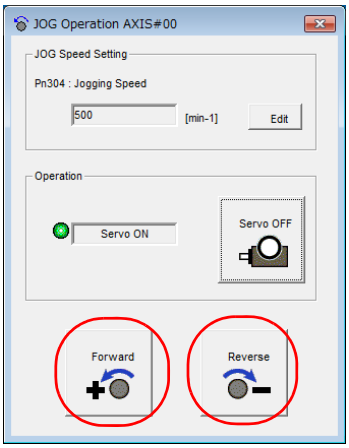

6. After you finish jogging, turn the power supply to the SERVOPACK OFF and ON again.

This concludes the jogging procedure.

7.4 Trial Operation from the Host Controller for the Servomotor without a Load

Conform the following items before you start trial operation from the host controller for the Servomotor without a load.

- Make sure that the Servomotor operation reference from the host controller to the SERVOPACK and the I/O signals are set up properly.
- Make sure that the wiring between the host controller and SERVOPACK and the polarity of the wiring are correct.
- Make sure that all operation settings for the SERVOPACK are correct.

The operation sequence for trial operation from the host controller for the Servomotor without a load is given below.

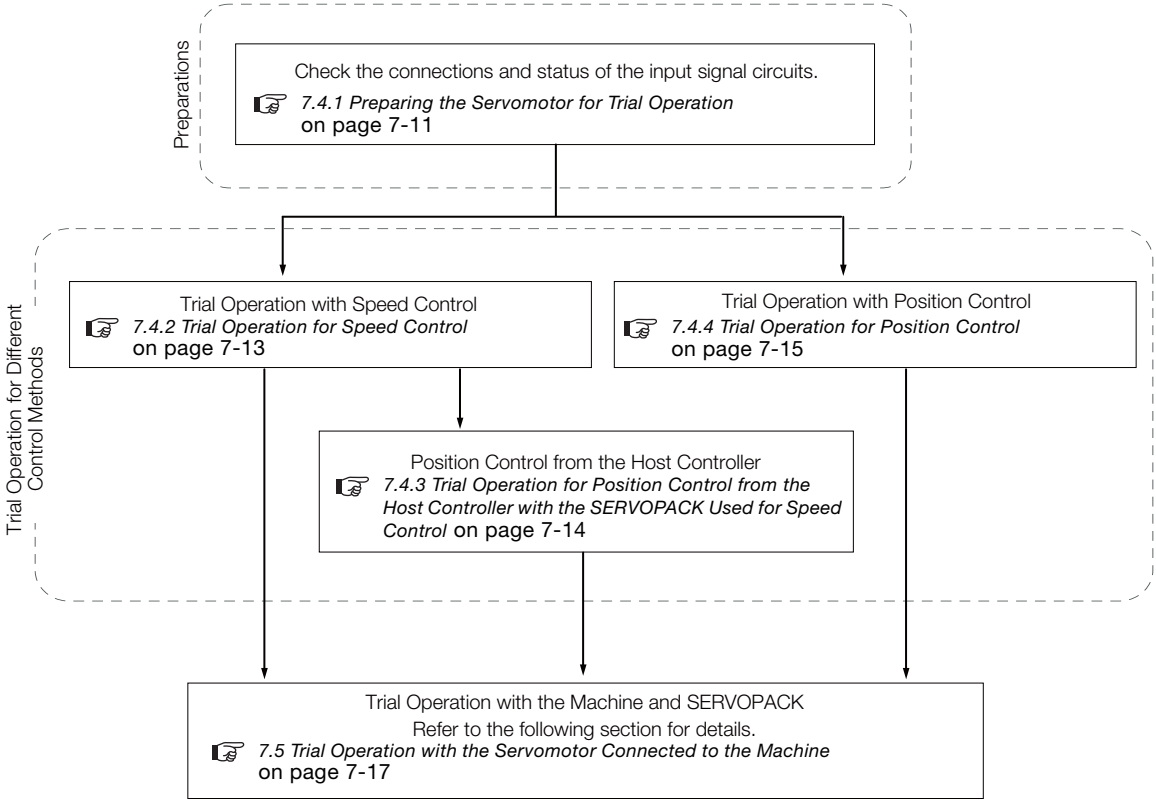

⚠ CAUTION

- Before you perform trial operation of the Servomotor without a load for references from the host controller, make sure that there is no load connected to the Servomotor (i.e., that all couplings and belts are removed from the Servomotor) to prevent unexpected accidents.

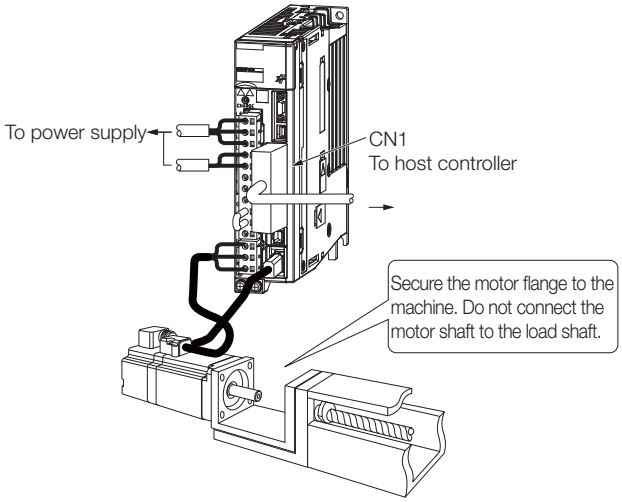

7.4.1 Preparing the Servomotor for Trial Operation

This section provides the procedure to prepare the Servomotor for trial operation.

Preparations

Always confirm the following before you perform the procedure to prepare the Servomotor for trial operation.

- Make sure that the preparations given in *7.1 Flow of Trial Operation* on page 7-2 have been completed.
- Make sure that the trial operation described in *7.3 Trial Operation for the Servomotor without a Load* on page 7-7 has been completed.

Operating Procedure

The following procedure assumes that the default settings are used for the I/O signals required for trial operation. Refer to the following section for information on the default I/O signal settings.

☞ *4.2 Basic Wiring Diagrams* on page 4-9

1. Wire the I/O signals from the host controller.
Refer to the following section for details.
☞ *4.2 Basic Wiring Diagrams* on page 4-9

2. Check the following items.

① Make sure that the /S-ON (Servo ON) signal can be input.

②Make sure that the P-OT (Forward Drive Prohibit) and N-OT (Reverse Drive Prohibit) signals are ON (closed).
Setting Procedure
- Input the signal to turn ON CN1-42 and CN1-43 (closed).
- Set Pn50A to n.8□□□ (Set the signal to always enable forward drive) and Pn50B to n.□□□8 (Set the signal to always enable reverse drive).

③Make sure that a reference is not being input.

④ If you are using a safety function, make sure that the safety function device is connected to CN8.
Refer to the following section for the safety function device connection method.
☞ *4.6 Connecting Safety Function Signals* on page 4-50

Information: You can set Pn002 to n.□1□□ (Use the encoder as an incremental encoder) to temporarily use an absolute encoder as an incremental encoder. This makes it possible to perform trial operation without setting up the absolute encoder or setting the SEN signal.

3. Connect the I/O Signal Cable to the I/O signal connector (CN1).

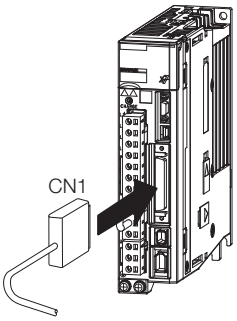

4. Turn ON the power supplies to the SERVOPACK.
The control power and main circuit power will be supplied.

5. Confirm that the Panel Operator display is as shown below.

6. If you are using an absolute encoder, turn ON the SEN signal.
The current position will be read from the absolute encoder.
This step is not necessary if you are using an incremental encoder.

7. Check the status of the I/O signals.
- Using the SigmaWin+: ***Monitor - Wiring Check***
- Using the Panel Operator or Digital Operator: Un005 (Input Signal Monitor)

The correct states of the input signals are given in the following table. If the actual states do not agree with those given in the following table, correct the I/O signals.

Signal	Correct State
/S-ON (Servo ON) Signal	OFF
/P-CON (Proportional Control) Signal	OFF
P-OT (Forward Drive Prohibit) Signal	ON
N-OT (Reverse Drive Prohibit) Signal	ON
/ALM-RST (Alarm Reset) Signal	OFF
/P-CL (Forward External Torque Limit) Signal	OFF
/N-CL (Reverse External Torque Limit) Signal	OFF
SEN (Absolute Data Request) Signal	• When using an absolute encoder: ON • When not using an absolute encoder: OFF

8. Input the /S-ON (Servo ON) signal.
The servo will turn ON.

9. Confirm that the Panel Operator display is as shown below.

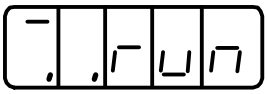

If the above display appears, power is being supplied to the Servomotor and the servo is ON.
If an alarm is displayed, the servo is OFF and power is not being supplied to the Servomotor. Refer to the following section, clear the alarm, and repeat the procedure from step 4.
☞ *12.2.3 Resetting Alarms* on page 12-41

10. If you changed the settings of Pn50A or Pn50B in step 2, return the settings to their original values.

This concludes the procedure to prepare the Servomotor for trial operation.

Proceed to one of the following sections according to the control method.
☞ *7.4.2 Trial Operation for Speed Control* on page 7-13
☞ *7.4.4 Trial Operation for Position Control* on page 7-15

7.4.2 Trial Operation for Speed Control

This section describes trial operation with speed control.

Preparations

Always confirm the following before you perform the procedure for trial operation with speed control.

- Make sure that the procedure to prepare the Servomotor for trial operation described in *7.4.1 Preparing the Servomotor for Trial Operation* on page 7-11 has been completed.

Operating Procedure

1. Adjust the speed reference input gain (Pn300).
   The default setting of Pn300 is for the rated speed at 6 V. If you want to use this setting, do not adjust Pn300 and proceed to the next step.
   To change the setting of Pn300, refer to the following section.
   ☞ *6.5 Speed Control* on page 6-17

2. Set the speed reference (V-REF, SG voltage) to 0 V from the host controller and check the rotation of the Servomotor shaft.
   If the Servomotor shaft is rotating slightly, refer to the following section and adjust the reference offset so that the shaft does not rotate.
   ☞ *Adjusting the Speed Reference Offset* on page 6-19

3. Input a low-speed, constant-speed reference from the host controller to operate the Servomotor and visually check the motor speed.
   - Rotary Servomotor example: For a speed reference of 60 min^{-1}, the shaft should rotate at 1 rotation per second.
   - Linear Servomotor example: For a speed reference of 60 mm/s, the Moving Coil should move at 60 mm/s.

4. Gradually increase the speed reference input from the host controller starting from 0 V.

5. Confirm that the motor speed agrees with the speed reference value.
   - Using the SigmaWin+: ***Monitor - Monitor - Status Monitor*** and ***Monitor - Monitor - Motion Monitor***
   - Using the Panel Operator or Digital Operator: Un001 (Speed Reference Monitor) and Un000 (Motor Speed Monitor)

6. Confirm that the Servomotor is operating in the correct direction.
   If the Servomotor direction is not correct, refer to the following section and change the Servomotor direction.
   ☞ *5.6 Motor Direction Setting* on page 5-18
7. Gradually reduce the speed reference input from the host controller back to 0 V.
8. Turn OFF the power supplies to the SERVOPACK.

This concludes the procedure for trial operation with speed control.

Proceed to the following section if you will perform position control on the host controller.
☞ *7.4.3 Trial Operation for Position Control from the Host Controller with the SERVOPACK Used for Speed Control* on page 7-14

Proceed to the following section if you will not perform position control on the host controller.
☞ *7.5 Trial Operation with the Servomotor Connected to the Machine* on page 7-17

7.4.3 Trial Operation for Position Control from the Host Controller with the SERVOPACK Used for Speed Control

This section describes the trial operation procedure to use the SERVOPACK for speed control and perform position control at the host controller.

Preparations

Always confirm the following before you perform the procedure to use the SERVOPACK for speed control and perform position control at the host controller.

- Make sure that the procedure described in *7.4.2 Trial Operation for Speed Control* on page 7-13 has been completed.

Operating Procedure

1. Turn ON the power supplies to the SERVOPACK.
2. Set Pn212 (Number of Encoder Output Pulses) or Pn281 (Encoder Output Resolution).
   Refer to the following section for details.
   ☞ *6.8.2 Setting for the Encoder Divided Pulse Output* on page 6-53
3. Execute the following type of simple positioning from the host controller and confirm the motion of the Servomotor.
   - Rotary Servomotors: Input a reference to move the Servomotor one rotation and confirm that the motor shaft moves one rotation.
   - Linear Servomotors: Input a reference to move the Servomotor 100 mm and confirm that the Servomotor moves 100 mm either visually or with a monitor function. To use a monitor function, perform one of the following.

   To use a monitor function, perform one of the following.
   - Using the SigmaWin+: ***Monitor - Monitor - Motion Monitor***
   - Using the Panel Operator or Digital Operator: Un003 (Rotational Angle 1 [unit: encoder pulses])

   If the amount of Servomotor rotation (pulses) is not correct, check the setting of Pn212 or Pn281.
4. Gradually reduce the speed reference input from the host controller back to 0 V.
5. Turn OFF the power supplies to the SERVOPACK.

This concludes the trial operation procedure for position control from the host controller with the SERVOPACK used for speed control. Proceed to the following section.
☞ *7.5 Trial Operation with the Servomotor Connected to the Machine* on page 7-17

7.4.4 Trial Operation for Position Control

This section describes the procedure for trial operation for position control.

Preparations

Always confirm the following before you perform the procedure for trial operation with position control.

- Make sure that the procedure to prepare the Servomotor for trial operation described in *7.4.1 Preparing the Servomotor for Trial Operation* on page 7-11 has been completed.

Operating Procedure

In this procedure, the electronic gear is set in the SERVOPACK and not in the host controller.

1. Turn OFF the /S-ON (Servo ON) signal from the host controller.
   The servo will turn OFF.

2. Set Pn200 =n.□□□X (Reference Pulse Form) to the reference pulse form of the host controller.

3. Set the reference unit and set the electronic gear ratio (Pn20E and Pn210) according to the host controller.

4. Turn the power supply to the SERVOPACK OFF and ON again.
   The new parameter settings will be enabled.

5. Input the /S-ON (Servo ON) signal from the host controller.
   The servo will turn ON.

6. Input a low-speed pulse reference from the host controller.
   Use a travel distance (number of reference pulses) that is easy to check (for example, the number of pulses for one rotation).
   For safety, set the number of references pulses for approximately the following motor speeds.
   - Rotary Servomotors: 100 min^{-1}
   - Linear Servomotors: 100 mm/s

7. Check the number of reference pulses that are input to the SERVOPACK from the changes in the input reference pulse counter before and after the reference.
   - Using the SigmaWin+: ***Monitor - Monitor - Motion Monitor,*** **Reference Pulse Counter**
   - Using the Panel Operator or Digital Operator: Un00C (Input Reference Pulse Counter Monitor)

8. Check the actual number of Servomotor rotations from the changes in the feedback pulse counter before and after the reference.
   - Using the SigmaWin+: ***Monitor - Monitor - Motion Monitor,*** **Feedback Pulse Counter**
   - Using the Panel Operator or Digital Operator: Un00D (Feedback Pulse Counter Monitor)

9. Confirm that the changes in the input reference pulse counter and the feedback pulse counter (i.e., the values from steps 7 and 8) satisfy the following equation.
   Change in input reference pulse counter = Change in feedback pulse counter x (Pn210/Pn20E)

10. Confirm that the Servomotor shaft is rotating in the direction specified by the reference.
    If the rotation direction does not agree with the reference direction, refer to the following section and change the rotation direction.
    ☞ *5.6 Motor Direction Setting* on page 5-18

11. Input a pulse reference for a comparatively large number of Servomotor rotations from the host controller so that the Servomotor will operate at a constant speed.

12. Check the reference pulse speed input to the SERVOPACK with the input reference pulse speed monitor.
- Using the SigmaWin+: ***Monitor - Monitor - Motion Monitor,*** **Input Reference Pulse Speed**
- Using the Panel Operator or Digital Operator: Un007 (Input Reference Pulse Speed Monitor)

The input reference pulse monitor uses the following formula.
- Rotary Servomotor with a 20-bit Encoder

$$\text{Input reference pulse speed monitor} = \underbrace{\text{Input reference pulse speed [pulses/s]} \times 60}_{\text{Reference input pulse speed/min}} \times \underbrace{\frac{\text{Pn20E}}{\text{Pn210}}}_{\text{Electronic gear ratio}} \times \underbrace{\frac{1}{2^{20}(=1{,}048{,}576)}}_{\text{Encoder pulse}}$$

- Linear Servomotors

$$\text{Input reference pulse speed monitor} = \text{Input reference pulse speed [pulses/s]} \times \underbrace{\frac{\text{Pn20E}}{\text{Pn210}}}_{\text{Electronic gear ratio}} \times \underbrace{\frac{\text{Linear encoder pitch [}\mu\text{m]}}{\text{Resolution}}}_{\text{Linear encoder resolution}} \times \frac{1}{1{,}000}$$

13. Check the motor speed monitor.
- Using the SigmaWin+: ***Monitor - Monitor - Motion Monitor,*** **Motor Speed**
- Using the Panel Operator or Digital Operator: Un000 (Motor Speed Monitor)

14. Confirm that the input reference pulse speed and the motor speed (i.e., the values from steps 12 and 13) are the same.

15. Stop the pulse reference from the host controller.

16. Turn OFF the /S-ON (Servo ON) signal from the host controller.
The servo will turn OFF.

This concludes the procedure for trial operation with position control. Proceed to the following section.

☞ *7.5 Trial Operation with the Servomotor Connected to the Machine* on page 7-17

7.5 Trial Operation with the Servomotor Connected to the Machine

This section provides the procedure for trial operation with both the machine and Servomotor.

7.5.1 Precautions

⚠ WARNING

- Operating mistakes that occur after the Servomotor is connected to the machine may not only damage the machine, but they may also cause accidents resulting in personal injury.

Important

If you disabled the overtravel function for trial operation of the Servomotor without a load, enable the overtravel function (P-OT and N-OT signal) before you preform trial operation with the Servomotor connected to the machine in order to provide protection.

If you will use a holding brake, observe the following precautions during trial operation.

- Before you check the operation of the brake, implement measures to prevent the machine from falling due to gravity and to prevent vibration from being caused by an external force.
- First check the Servomotor operation and brake operation with the Servomotor uncoupled from the machine. If no problems are found, connect the Servomotor to the machine and perform trial operation again.

Control the operation of the brake with the /BK (Brake) signal output from the SERVOPACK.

Refer to the following sections for information on wiring and the related parameter settings.

☞ *4.4.4 Wiring the SERVOPACK to the Holding Brake* on page 4-34
☞ *5.13 Holding Brake* on page 5-36

Important

Failures caused by incorrect wiring or incorrect voltage application in the brake circuit may cause the SERVOPACK to fail, damage the SERVOPACK, damage the equipment, or cause an accident resulting in death or injury.
Observe the precautions and instructions for wiring and trial operation precisely as described in this manual.

7.5.2 Preparations

Always confirm the following before you perform the trial operation procedure for both the machine and Servomotor.

- Make sure that the procedure described in *7.4 Trial Operation from the Host Controller for the Servomotor without a Load* on page 7-10 has been completed.
- Make sure that the SERVOPACK is connected correctly to both the host controller and the peripheral devices.
  - Safety Function Wiring
    - If you are not using the safety function, leave the Safety Jumper Connector (provided as an accessory with the SERVOPACK) connected to CN8.
    - If you are using the safety function, remove the Safety Jumper Connector from CN8 and connect the safety function device.
  - Overtravel wiring
  - Brake wiring
  - Allocation of the /BK (Brake) signal to a pin on the I/O signal connector (CN1)
  - Emergency stop circuit wiring
  - Host controller wiring
    Refer to the following section and change the wiring to match the system configuration.
    ☞ *15.1 Examples of Connections to Host Controllers* on page 15-2

7.5.3 Operating Procedure

1. Enable the overtravel signals.
   ☞ *5.12.2 Setting to Enable/Disable Overtravel* on page 5-32

2. Make the settings for the protective functions, such as the safety function, overtravel, and the brake.
   ☞ *4.6 Connecting Safety Function Signals* on page 4-50
   ☞ *5.12 Overtravel and Related Settings* on page 5-31
   ☞ *5.13 Holding Brake* on page 5-36

3. Set the parameters that are required for the control method you will use.
   ☞ *6.5 Speed Control* on page 6-17
   ☞ *6.6 Position Control* on page 6-30
   ☞ *6.7 Torque Control* on page 6-40

4. Turn OFF the power supplies to the SERVOPACK.
   The control power supply and main circuit power supply will turn OFF.

5. Couple the Servomotor to the machine.

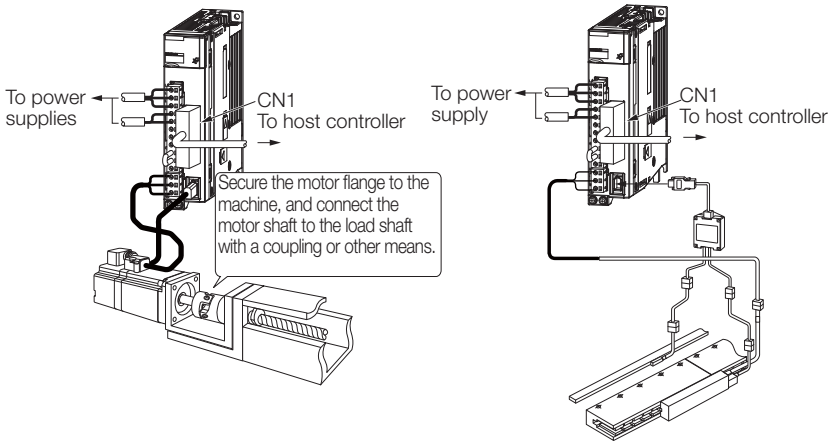

6. Turn ON the power supplies to the machine and host controller and turn ON the control power supply and main circuit power supply to the SERVOPACK.

7. Check the protective functions, such as overtravel and the brake, to confirm that they operate correctly.
   Note: Enable activating an emergency stop so that the Servomotor can be stopped safely should an error occur during the remainder of the procedure.

8. Perform trial operation according to *7.4 Trial Operation from the Host Controller for the Servomotor without a Load* on page 7-10 and confirm that the same results are obtained as when trial operation was performed on the Servomotor without a load.

9. Check the settings of the parameters for the control method and confirm that the Servomotor operates according to machine operating specifications.

10. If necessary, adjust the servo gain to improve the Servomotor response characteristics.
    The Servomotor and machine may not be broken in completely for the trial operation. Therefore, let the system run for a sufficient amount of time to ensure that it is properly broken in.

11. For future maintenance, save the parameter settings with one of the following methods.
    - Use the SigmaWin+ to save the parameters as a file.
    - Use the Parameter Copy Mode of the Digital Operator.
    - Record the settings manually.

This concludes the procedure for trial operation with both the machine and Servomotor.

7.6 Convenient Function to Use during Trial Operation

This section describes some convenient operations that you can use during trial operation. Use them as required.

7.6.1 Program Jogging

You can use program jogging to perform continuous operation with a preset operation pattern, travel distance, movement speed, acceleration/deceleration time, waiting time, and number of movements.

You can use this operation when you set up the system in the same way as for normal jogging to move the Servomotor without connecting it to the host controller in order to check Servomotor operation and execute simple positioning operations.

Preparations

Always check the following before you execute program jogging.

- The parameters must not be write prohibited.
- The main circuit power supply must be ON.
- There must be no alarms.
- There must be no hard wire base block (HWBB).
- The servo must be OFF.
- The range of machine motion and the safe movement speed of your machine must be considered when you set the travel distance and movement speed.
- There must be no overtravel.

Additional Information

- The program jogging operation is performed with position control, but a pulse reference is not input to the SERVOPACK.
- You can use the functions that are applicable to position control.
- The overtravel function is enabled.
- When an absolute encoder is used, you do not need to input the SEN signal. It is always active.
- You cannot use reference pulse input multiplication switching.

Program Jogging Operation Pattern

An example of a program jogging operation pattern is given below. In this example, the Servomotor direction is set to Pn000 = n.□□□0 (Use CCW as the forward direction).

Setting of Pn530	Setting	Operation Pattern
n.□□□0	(Waiting time → Forward travel distance) × Number of movements	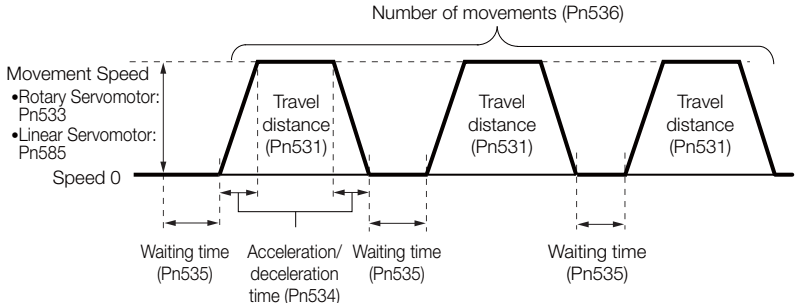

Continued on next page.

Continued from previous page.

Setting of Pn530	Setting	Operation Pattern
n.□□□1	(Waiting time → Reverse by travel distance) × Number of movements	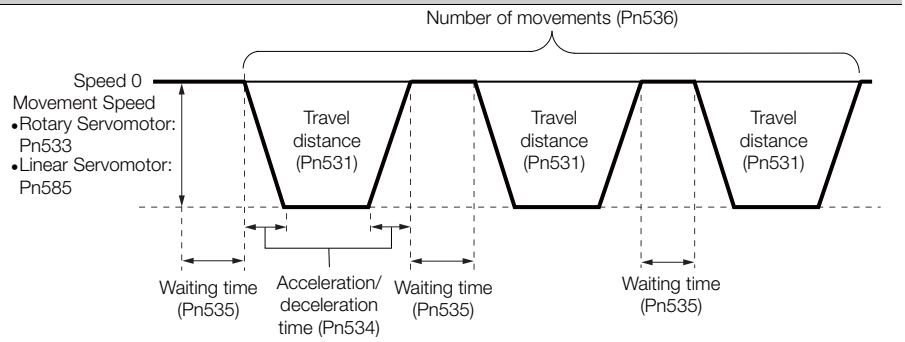
n.□□□2	(Waiting time → Forward by travel distance) × Number of movements → (Waiting time → Reverse by travel distance) × Number of movements	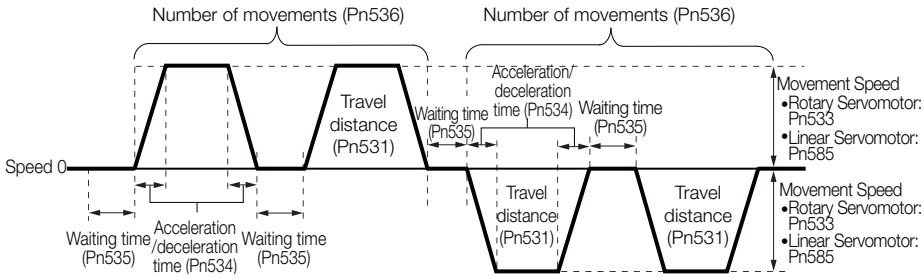
n.□□□3	(Waiting time → Reverse by travel distance) × Number of movements → (Waiting time → Forward by travel distance) × Number of movements	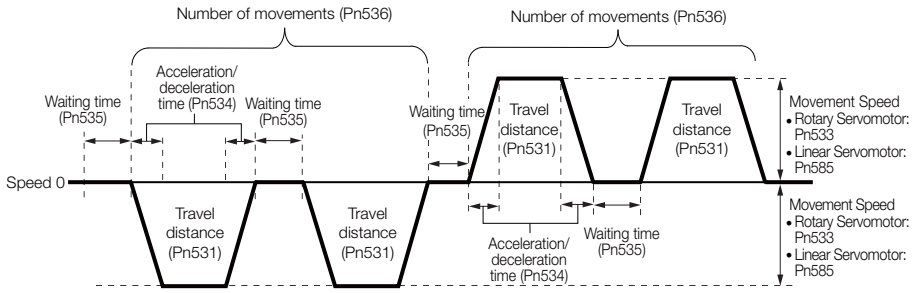
n.□□□4	(Waiting time → Forward by travel distance → Waiting time → Reverse by travel distance) × Number of movements	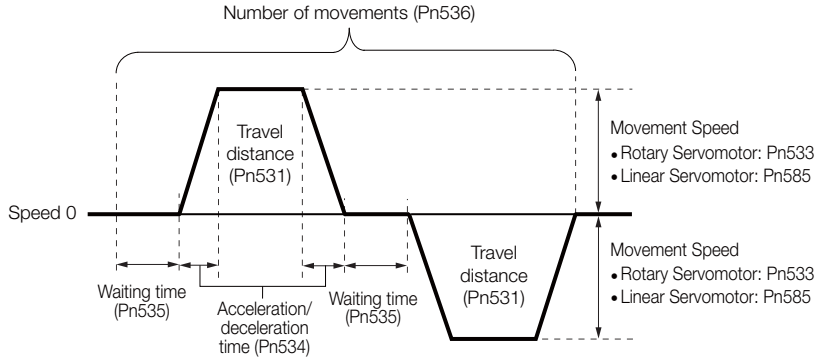
n.□□□5	(Waiting time → Reverse by travel distance → Waiting time → Forward by travel distance) × Number of movements	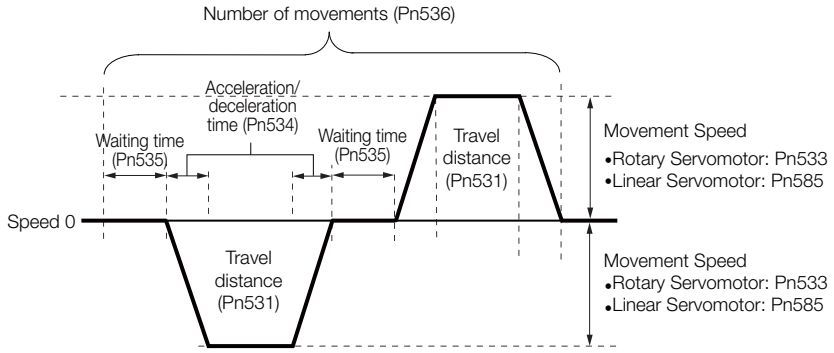

Information

If Pn530 is set to n.□□□0, n.□□□1, n.□□□4, or n.□□□5, you can set Pn536 (Program Jogging Number of Movements) to 0 to perform infinite time operation.
You cannot use infinite time operation if Pn530 is set to n.□□□2 or n.□□□3.
If you perform infinite time operation from the Panel Operator or Digital Operator, press the **MODE/SET** Key or **JOG/SVON** Key to turn OFF the servo to end infinite time operation.

Related Parameters

Use the following parameters to set the program jogging operation pattern. Do not change the settings while the program jogging operation is being executed.

- Rotary Servomotors

Pn530	Program Jogging-Related Selections			Speed Position Torque	
	Setting Range	Setting Unit	Default Setting	When Enabled	Classification
	0000 to 0005	–	0000	Immediately	Setup
Pn531	Program Jogging Travel Distance			Speed Position Torque	
	Setting Range	Setting Unit	Default Setting	When Enabled	Classification
	1 to 1,073,741,824	1 reference unit	32,768	Immediately	Setup
Pn533	Program Jogging Movement Speed			Speed Position Torque	
	Setting Range	Setting Unit	Default Setting	When Enabled	Classification
	1 to 10,000	1 min^{-1}	500	Immediately	Setup
Pn534	Program Jogging Acceleration/Deceleration Time			Speed Position Torque	
	Setting Range	Setting Unit	Default Setting	When Enabled	Classification
	2 to 10,000	1 ms	100	Immediately	Setup
Pn535	Program Jogging Waiting Time			Speed Position Torque	
	Setting Range	Setting Unit	Default Setting	When Enabled	Classification
	0 to 10,000	1 ms	100	Immediately	Setup
Pn536	Program Jogging Number of Movements			Speed Position Torque	
	Setting Range	Setting Unit	Default Setting	When Enabled	Classification
	0 to 1,000	1 time	1	Immediately	Setup

- Direct Drive Servomotors

Pn530	Program Jogging-Related Selections			Speed Position Torque	
	Setting Range	Setting Unit	Default Setting	When Enabled	Classification
	0000 to 0005	–	0000	Immediately	Setup
Pn531	Program Jogging Travel Distance			Speed Position Torque	
	Setting Range	Setting Unit	Default Setting	When Enabled	Classification
	1 to 1,073,741,824	1 reference unit	32,768	Immediately	Setup
Pn533	Program Jogging Movement Speed			Speed Position Torque	
	Setting Range	Setting Unit	Default Setting	When Enabled	Classification
	1 to 10,000	0.1 min^{-1}	500	Immediately	Setup
Pn534	Program Jogging Acceleration/Deceleration Time			Speed Position Torque	
	Setting Range	Setting Unit	Default Setting	When Enabled	Classification
	2 to 10,000	1 ms	100	Immediately	Setup
Pn535	Program Jogging Waiting Time			Speed Position Torque	
	Setting Range	Setting Unit	Default Setting	When Enabled	Classification
	0 to 10,000	1 ms	100	Immediately	Setup
Pn536	Program Jogging Number of Movements			Speed Position Torque	
	Setting Range	Setting Unit	Default Setting	When Enabled	Classification
	0 to 1,000	1 time	1	Immediately	Setup

• Linear Servomotors

Pn530	Program Jogging-Related Selections			Speed Position Force	
	Setting Range	Setting Unit	Default Setting	When Enabled	Classification
	0000 to 0005	–	0000	Immediately	Setup
Pn531	Program Jogging Travel Distance			Speed Position Force	
	Setting Range	Setting Unit	Default Setting	When Enabled	Classification
	1 to 1,073,741,824	1 reference unit	32,768	Immediately	Setup
Pn585	Program Jogging Movement Speed			Speed Position Force	
	Setting Range	Setting Unit	Default Setting	When Enabled	Classification
	1 to 10,000	1 mm/s	50	Immediately	Setup
Pn534	Program Jogging Acceleration/Deceleration Time			Speed Position Force	
	Setting Range	Setting Unit	Default Setting	When Enabled	Classification
	2 to 10,000	1 ms	100	Immediately	Setup
Pn535	Program Jogging Waiting Time			Speed Position Force	
	Setting Range	Setting Unit	Default Setting	When Enabled	Classification
	0 to 10,000	1 ms	100	Immediately	Setup
Pn536	Program Jogging Number of Movements			Speed Position Force	
	Setting Range	Setting Unit	Default Setting	When Enabled	Classification
	0 to 1,000	1 time	1	Immediately	Setup

Applicable Tools

The following table lists the tools that you can use to perform program jogging.

Tool	Fn No./Function Name	Reference
Panel Operator	Fn004	*13.4.4 Jog Program (Fn004)* on page 13-15
Digital Operator	Fn004	Σ-7-Series Digital Operator Operating Manual (Manual No.: SIEP S800001 33)
SigmaWin+	***Operation - Program JOG Operation***	*Operating Procedure* on page 7-24

Operating Procedure

Use the following procedure for a program jog operation.

1. Click the Servo Drive Button in the workspace of the Main Window of the SigmaWin+.

2. Select **Program JOG Operation** in the Menu Dialog Box.
   The Jog Program Dialog Box will be displayed.

3. Read the warnings and then click the **OK** Button.

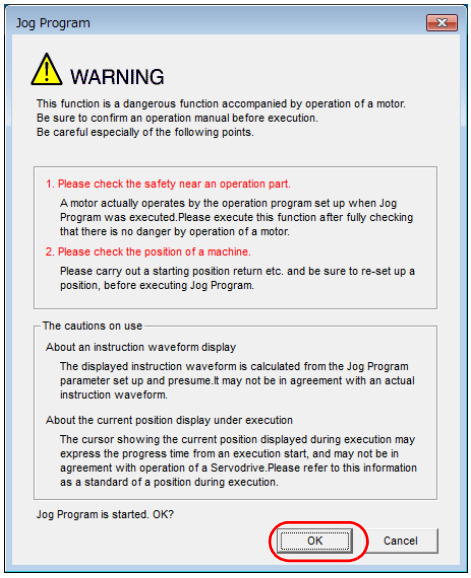

4. Set the operating conditions, click the **Apply** Button, and then click the **Run** Button.
   A graph of the operation pattern will be displayed.

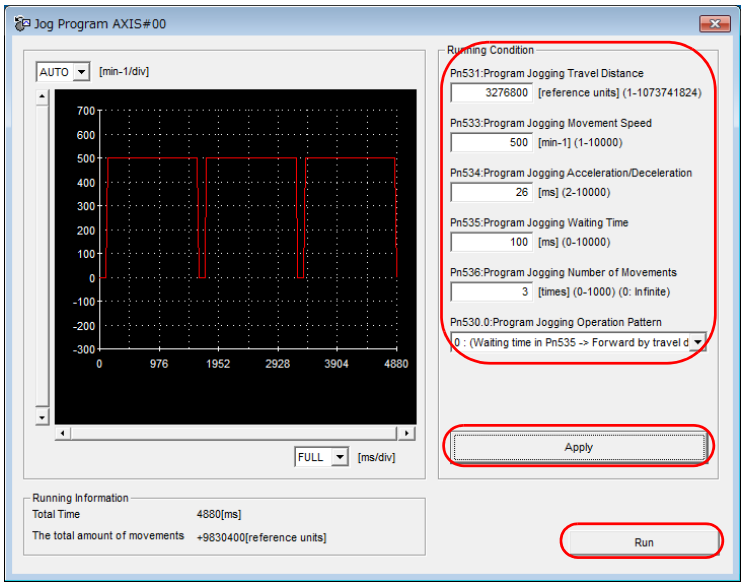

5. Click the **Servo ON** Button and then the **Execute** Button. The program jogging operation will be executed.

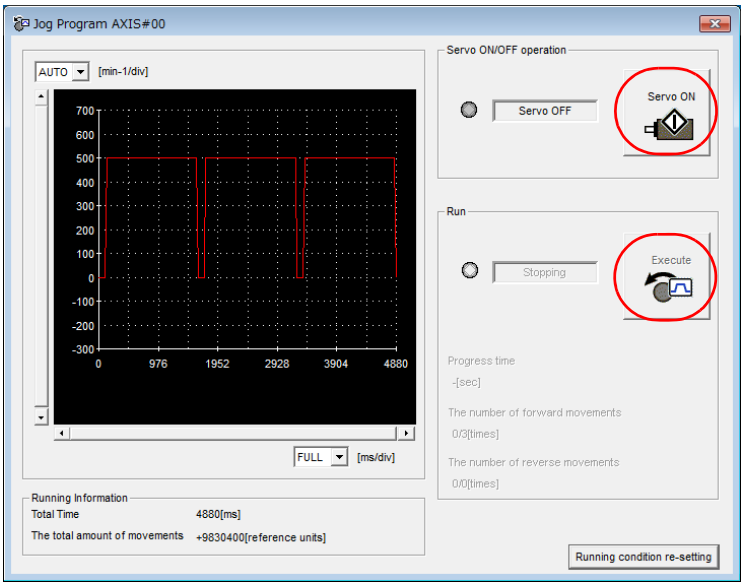

⚠ CAUTION

- Be aware of the following points if you cancel the program jogging operation while the Servomotor is operating.
  - If you cancel operation with the **Servo OFF** Button, the Servomotor will stop according to setting of the Servo OFF stopping method (Pn001 = n.□□□X).
  - If you cancel operation with the **Cancel** Button, the Servomotor will decelerate to a stop and then enter a zero-clamped state.

This concludes the program jogging procedure.

7.6.2 Origin Search

The origin search operation positions the motor to the origin within one rotation and then clamps it there.

⚠ CAUTION

- Make sure that the load is not coupled when you execute an origin search.
  The Forward Drive Prohibit (P-OT) signal and Reverse Drive Prohibit (N-OT) signal are disabled during an origin search.

Use an origin search when it is necessary to align the origin within one rotation with the machine origin. The following speeds are used for origin searches.

- Rotary Servomotors: 60 min^{-1}
- Direct Drive Servomotors: 6 min^{-1}
- Linear Servomotors: 15 mm/s

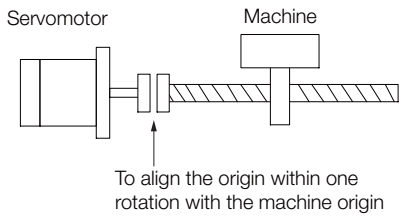

Preparations

Always check the following before you execute an origin search.

- The parameters must not be write prohibited.
- The main circuit power supply must be ON.
- There must be no alarms.
- There must be no hard wire base block (HWBB).
- The servo must be OFF.

Applicable Tools

The following table lists the tools that you can use to perform an origin search.

Tool	Fn No./Function Name	Reference
Panel Operator	Fn003	*13.4.3 Origin Search (Fn003)* on page 13-14
Digital Operator	Fn003	Σ-7-Series Digital Operator Operating Manual (Manual No.: SIEP S800001 33)
SigmaWin+*	**Encoder Setting - Origin Search**	*Operating Procedure* on page 7-26

* Cannot be used when connecting a Linear Servomotor.

Operating Procedure

Use the following procedure to perform an origin search.

1. Click the Servo Drive Button in the workspace of the Main Window of the SigmaWin+.
2. Select **Origin Search** in the Menu Dialog Box.
   The Origin Search Dialog Box will be displayed.
3. Read the warnings and then click the **OK** Button.

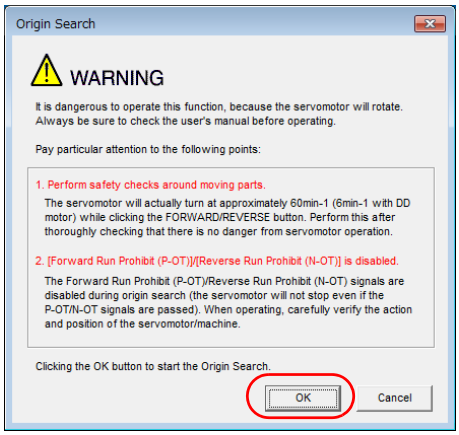

4. Click the **Servo ON** Button.

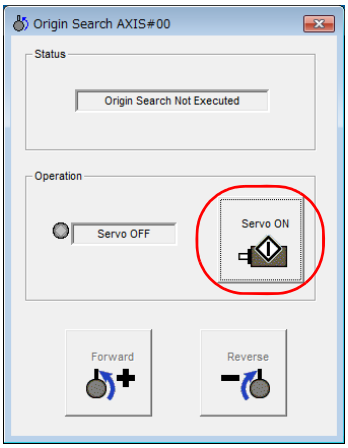

5. Click the **Forward** Button or the **Reverse** Button.
An origin search will be performed only while you hold down the mouse button. The motor will stop when the origin search has been completed.

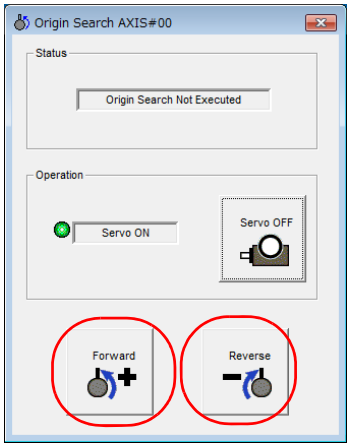

This concludes the origin search procedure.

7.6.3 Test without a Motor

A test without a motor is used to check the operation of the host controller and peripheral devices by simulating the operation of the Servomotor in the SERVOPACK, i.e., without actually operating a Servomotor. This test allows you to check wiring, debug the system, and verify parameters to shorten the time required for setup work and to prevent damage to the machine that may result from possible malfunctions. The operation of the Servomotor can be checked with this test regardless of whether the Servomotor is actually connected or not.

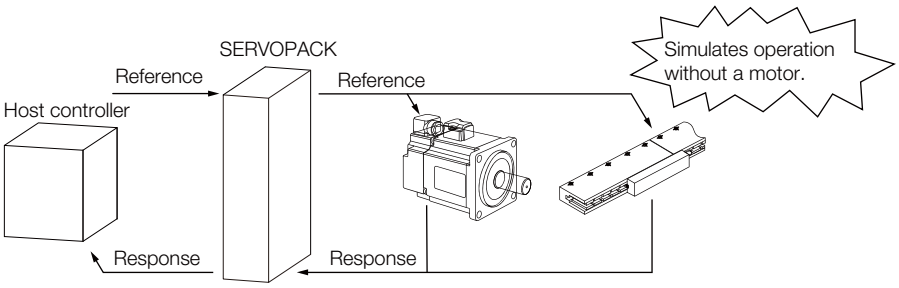

Use Pn00C = n.□□□X to enable or disable the test without a motor.

Parameter		Meaning	When Enabled	Classification
Pn00C	n.□□□0 (default setting)	Disable tests without a motor.	After restart	Setup
	n.□□□1	Enable tests without a motor.		

Information

- While the test without a motor is being executed, the display on the Panel Operate will alternate between **tSt** and the status of the SERVOPACK.
  Refer to the following section for information SERVOPACK status displays.
  ☞ *13.1.3 Status Displays* on page 13-4
- An asterisk is displayed on the status display of the Digital Operator while a test without a motor is being executed.

Motor Information and Encoder Information

The motor and encoder information is used during tests without a motor. The source of the information depends on the device connection status.

- Rotary Servomotor

Motor Connection Status	Information That Is Used	Source of Information
Connected	Motor information • Rated motor speed • Maximum motor speed	Information in the Servomotor that is connected
	Encoder information • Encoder resolution • Encoder type	
Not connected	Motor information • Rated motor speed • Maximum motor speed	• Setting of Pn000 = n.X□□□ (Rotary/Linear Servomotor Startup Selection When Encoder Is Not Connected) • Rated motor speed and maximum motor speed The values previously saved in the SERVOPACK will be used for the rated motor speed and maximum motor speed. Use the motor displays (Un020: Rated Motor Speed and Un021: Maximum Motor Speed) to check the values.
	Encoder information • Encoder resolution • Encoder type	• Encoder resolution: Setting of Pn00C = n.□□X□ (Encoder Resolution for Tests without a Motor) • Encoder type: Setting of Pn00C = n.□X□□ (Encoder Type Selection for Tests without a Motor)

If you use fully-closed loop control, the external encoder information is also used.

External Encoder Connection Status	Information That Is Used	Source of Information
Connected	External encoder information • Resolution • Encoder type	Information in the external encoder that is connected
Not connected		• Resolution: 256 • Encoder type: Incremental encoder

- Linear Servomotors

Motor Connection Status	Information That Is Used	Source of Information
Connected	Motor information	Information in the motor that is connected
	Linear encoder information • Resolution • Encoder pitch • Encoder type	Information in the linear encoder that is connected
Not connected	Motor information	Setting of Pn000 = n.X□□□ (Rotary/Linear Servomotor Startup Selection When Encoder Is Not Connected)
	Linear encoder information • Resolution • Encoder pitch • Encoder type	• Resolution: 256 • Encoder pitch: Setting of Pn282 (Linear Encoder Scale Pitch) • Encoder type: Setting of Pn00C = n.□X□□ (Encoder Type Selection for Tests without a Motor)

- Related Parameters

Parameter		Meaning	When Enabled	Classification
Pn000	n.0□□□ (default setting)	When an encoder is not connected, start as SERVOPACK for Rotary Servomotor.	After restart	Setup
	n.1□□□	When an encoder is not connected, start as SERVOPACK for Linear Servomotor.		

Pn282	Linear Encoder Scale Pitch			Speed Position Force	
	Setting Range	Setting Unit	Default Setting	When Enabled	Classification
	0 to 6,553,600	0.01 μm	0	After restart	Setup

Parameter		Meaning	When Enabled	Classification
Pn00C	n.□□0□ (default setting)	Use 13 bits as encoder resolution for tests without a motor.	After restart	Setup
	n.□□1□	Use 20 bits as encoder resolution for tests without a motor.		
	n.□□2□	Use 22 bits as encoder resolution for tests without a motor.		
	n.□□3□	Use 24 bits as encoder resolution for tests without a motor.		
	n.□0□□ (default setting)	Use an incremental encoder for tests without a motor.		
	n.□1□□	Use an absolute encoder for tests without a motor.		

Motor Position and Speed Responses

For a test without a motor, the following responses are simulated for references from the host controller according to the gain settings for position or speed control.

- Servomotor position
- Motor speed
- External encoder position

The load model will be for a rigid system with the moment of inertia ratio that is set in Pn103.

Restrictions

The following functions cannot be used during the test without a motor.

- Regeneration and dynamic brake operation
- Brake output signal
- Items marked with "×" in the following utility function table

SigmaWin+		Panel Operator or Digital Operator		Executable?		Reference
Button in Menu Dialog Box	SigmaWin+ Function Name	Fn No.	Utility Function Name	Motor Not Connected	Motor Connected	
Basic Functions	Initialize *1	Fn005	Initializing Parameters	○	○	page 5-11
	Software Reset	Fn030	Software Reset	○	○	page 6-97
	Product Information	Fn011	Display Servomotor Model	○	○	page 9-2
		Fn012	Display Software Version	○	○	
		Fn01E	Display SERVOPACK and Servomotor IDs	○	○	
		Fn01F	Display Servomotor ID from Feedback Option Module	○	○	
Encoder Setting	Reset Absolute Encoder	Fn008	Reset Absolute Encoder	×	○	page 5-52
	Multi-turn Limit Setup	Fn013	Multiturn Limit Setting after Multiturn Limit Disagreement Alarm	×	○	page 6-85
	Search Origin*2	Fn003	Origin Search	○	○	page 7-25
	Zero Point Position Setting	Fn020	Set Absolute Linear Encoder Origin	×	○	page 5-55
	Polarity Detection	Fn080	Polarity Detection	×	×	page 5-30
Trouble-shooting	Display Alarm	Fn000	Display Alarm History	○	○	page 12-42
		Fn006	Clear Alarm History	○	○	page 12-43
		Fn014	Reset Option Module Configuration Error	○	○	page 12-44
	Reset Motor Type Alarm	Fn021	Reset Motor Type Alarm	○	○	page 12-46
Operation	Jog	Fn002	Jog	○	○	page 7-7
	Program JOG Operation	Fn004	Jog Program	○	○	page 7-20
Tuning	Tuning - Autotuning without Host Reference	Fn201	Advanced Autotuning without Reference	×	×	page 8-24
	Tuning - Autotuning with Host Reference	Fn202	Advanced Autotuning with Reference	×	×	page 8-35
	Tuning - Custom Tuning	Fn203	One-Parameter Tuning	×	×	page 8-42
	Tuning - Custom Tuning - Adjust Anti-resonance Control	Fn204	Adjust Anti-resonance Control	×	×	page 8-51
	Tuning - Custom Tuning - Vibration Suppression	Fn205	Vibration Suppression	×	×	page 8-56
	Response Level Setting	Fn200	Tuning-less Level Setting	×	×	page 8-12
Diagnostic	Easy FFT	Fn206	Easy FFT	×	×	page 8-95

Continued on next page.

Continued from previous page.

SigmaWin+		Panel Operator or Digital Operator		Executable?		Reference
Button in Menu Dialog Box	SigmaWin+ Function Name	Fn No.	Utility Function Name	Motor Not Connected	Motor Connected	
Others	Adjust the Speed and Torque Reference Offset	Fn009	Autotune Analog (Speed/ Torque) Reference Offset	○	○	page 6-20, page 6-41
		Fn00A	Manually Adjust Speed Reference Offset	○	○	page 6-22
		Fn00B	Manually Adjust Torque Reference Offset	○	○	page 6-43
	Adjust the Analog Monitor Output	Fn00C	Adjust Analog Monitor Output Offset	○	○	page 9-10
		Fn00D	Adjust Analog Monitor Output Gain	○	○	
	Adjust the Motor Current Detection Offsets	Fn00E	Autotune Motor Current Detection Signal	×	○	page 6-103
		Fn00F	Manually Adjust Motor Current Detection Signal Offset	×	○	
	Initialize Vibration Detection Level	Fn01B	Initialize Vibration Detection Level	×	×	page 6-99
	Write Prohibited Setting	Fn010	Write Prohibition Setting	○	○	page 5-8

*1. An **Initialize** Button will be displayed in the Parameter Editing Dialog Box.
*2. Cannot be used when connecting a Linear Servomotor.

Tuning

8

This chapter provides information on the flow of tuning, details on tuning functions, and related operating procedures.

8.1 Overview and Flow of Tuning 8-4

8.1.1 Tuning Functions 8-5
8.1.2 Diagnostic Tool 8-6

8.2 Monitoring Methods 8-7

8.3 Precautions to Ensure Safe Tuning 8-8

8.3.1 Overtravel Settings 8-8
8.3.2 Torque Limit Settings 8-8
8.3.3 Setting the Position Deviation Overflow Alarm Level 8-8
8.3.4 Vibration Detection Level Setting 8-10
8.3.5 Setting the Position Deviation Overflow Alarm Level at Servo ON 8-10

8.4 Tuning-less Function 8-12

8.4.1 Application Restrictions 8-12
8.4.2 Operating Procedure 8-13
8.4.3 Troubleshooting Alarms 8-14
8.4.4 Parameters Disabled by Tuning-less Function . . 8-15
8.4.5 Automatically Adjusted Function Setting 8-15
8.4.6 Related Parameters 8-15

8.5 Estimating the Moment of Inertia 8-16

8.5.1 Outline 8-16
8.5.2 Restrictions 8-17
8.5.3 Applicable Tools 8-17
8.5.4 Operating Procedure 8-18

8.6 Autotuning without Host Reference 8-24
8.6.1 Outline 8-24
8.6.2 Restrictions 8-25
8.6.3 Applicable Tools 8-26
8.6.4 Operating Procedure 8-26
8.6.5 Troubleshooting Problems in Autotuning without a Host Reference 8-31
8.6.6 Automatically Adjusted Function Settings 8-32
8.6.7 Related Parameters 8-34

8.7 Autotuning with a Host Reference 8-35
8.7.1 Outline 8-35
8.7.2 Restrictions 8-35
8.7.3 Applicable Tools 8-36
8.7.4 Operating Procedure 8-36
8.7.5 Troubleshooting Problems in Autotuning with a Host Reference 8-40
8.7.6 Automatically Adjusted Function Settings 8-41
8.7.7 Related Parameters 8-41

8.8 Custom Tuning 8-42
8.8.1 Outline 8-42
8.8.2 Preparations 8-42
8.8.3 Applicable Tools 8-43
8.8.4 Operating Procedure 8-43
8.8.5 Automatically Adjusted Function Settings 8-49
8.8.6 Tuning Example for Tuning Mode 2 or 3 8-49
8.8.7 Related Parameters 8-50

8.9 Anti-Resonance Control Adjustment 8-51
8.9.1 Outline 8-51
8.9.2 Preparations 8-51
8.9.3 Applicable Tools 8-52
8.9.4 Operating Procedure 8-52
8.9.5 Related Parameters 8-54
8.9.6 Suppressing Different Vibration Frequencies with Anti-resonance Control 8-54

8.10 Vibration Suppression 8-56
8.10.1 Outline 8-56
8.10.2 Preparations 8-57
8.10.3 Applicable Tools 8-57
8.10.4 Operating Procedure 8-57
8.10.5 Setting Combined Functions 8-59
8.10.6 Related Parameters 8-59

8.11 Speed Ripple Compensation 8-60
8.11.1 Outline 8-60
8.11.2 Setting Up Speed Ripple Compensation 8-60
8.11.3 Setting Parameters 8-64

8.12 Additional Adjustment Functions 8-66
8.12.1 Gain Switching 8-66
8.12.2 Friction Compensation 8-70
8.12.3 Gravity Compensation 8-71
8.12.4 Current Control Mode Selection 8-73
8.12.5 Current Gain Level Setting 8-73
8.12.6 Speed Detection Method Selection 8-74
8.12.7 Speed Feedback Filter 8-74
8.12.8 Proportional Control (P Control) 8-74

8.13 Manual Tuning 8-76
8.13.1 Tuning the Servo Gains 8-76
8.13.2 Compatible Adjustment Functions 8-87

8.14 Diagnostic Tools 8-93
8.14.1 Mechanical Analysis 8-93
8.14.2 Easy FFT 8-95

8.1 Overview and Flow of Tuning

Tuning is performed to optimize response by adjusting the servo gains in the SERVOPACK.

The servo gains are set using a combination of parameters, such as parameters for the speed loop gain, position loop gain, filters, friction compensation, and moment of inertia ratio. These parameters influence each other, so you must consider the balance between them.

The servo gains are set to stable settings by default. Use the various tuning functions to increase the response even further for the conditions of your machine.

The basic tuning procedure is shown in the following flowchart. Make suitable adjustments considering the conditions and operating requirements of your machine.

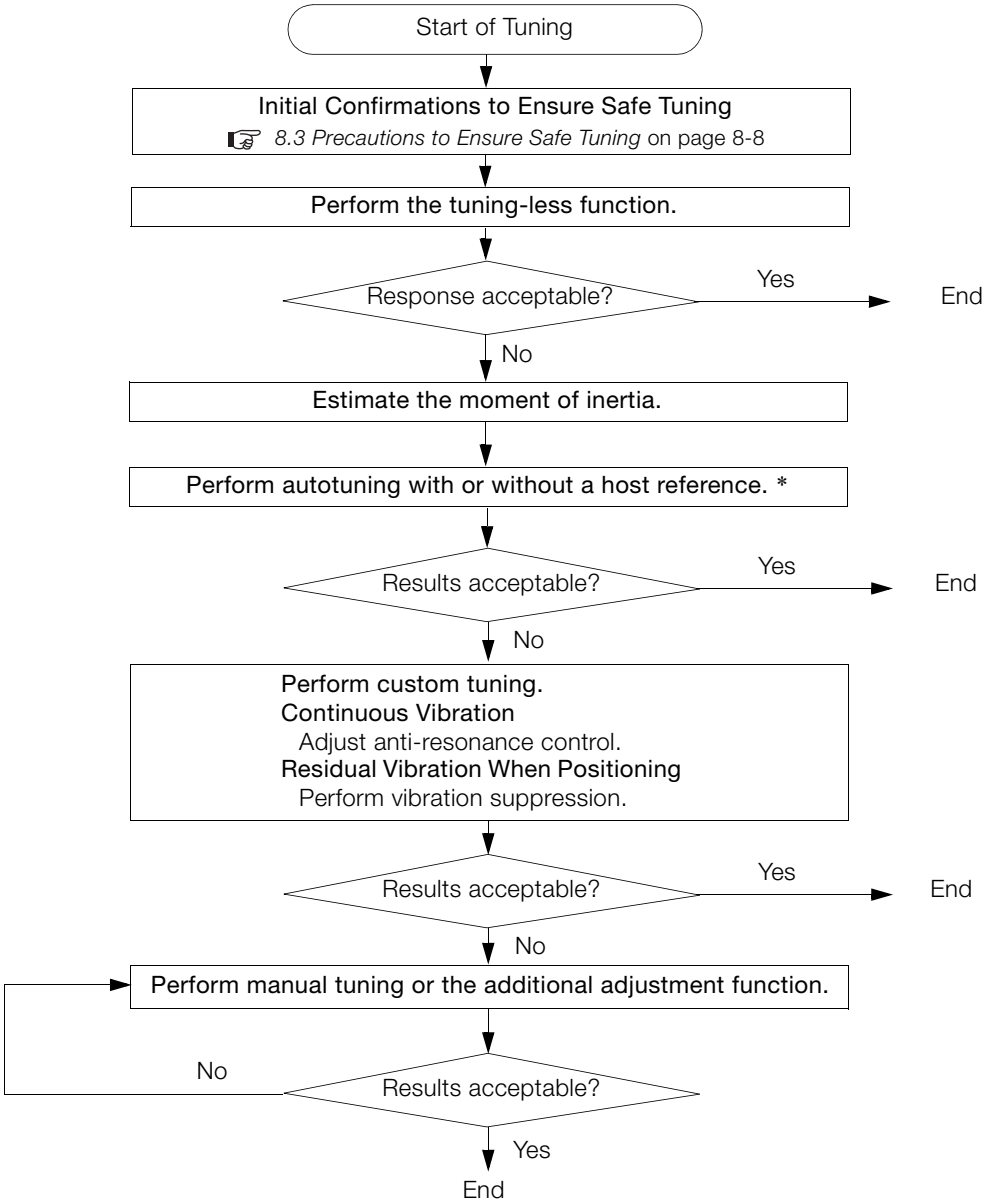

* If possible, perform autotuning with a host reference.
If a host controller is not available, set an operation pattern that is as close as possible to the host reference and perform autotuning without a host reference.
If an operation pattern that is close to the host reference is not possible, perform autotuning with a host reference while performing program jogging.

8.1.1 Tuning Functions

The following table provides an overview of the tuning functions.

Tuning Function	Outline	Applicable Control Methods	Reference
Tuning-less Function	This automatic adjustment function is designed to enable stable operation without servo tuning. This function can be used to obtain a stable response regardless of the type of machine or changes in the load. You can use it with the default settings.	Speed control or position control	page 8-12
Moment of Inertia Estimation	The moment of inertia ratio is calculated by operating the Servomotor a few times. The moment of inertia ratio that is calculated here is used in other tuning functions.	Speed control, position control, or torque control	page 8-16
Autotuning without Host Reference	The following parameters are automatically adjusted in the internal references in the SERVOPACK during automatic operation. • Gains (e.g., position loop gain and speed loop gain) • Filters (torque reference filter and notch filters) • Friction compensation • Anti-resonance control • Vibration suppression	Speed control or position control	page 8-24
Autotuning with Host Reference	The following parameters are automatically adjusted with the position reference input from the host controller while the machine is in operation. You can use this function for fine-tuning after you perform autotuning without a host reference. • Gains (e.g., position loop gain and speed loop gain) • Filters (torque reference filter and notch filters) • Friction compensation • Anti-resonance control • Vibration suppression	Position control	page 8-35
Custom Tuning	The following parameters are adjusted with the position reference or speed reference input from the host controller while the machine is in operation. • Gains (e.g., position loop gain and speed loop gain) • Filters (torque reference filter and notch filters) • Friction compensation • Anti-resonance control	Speed control or position control	page 8-42
Anti-resonance Control Adjustment	This function effectively suppresses continuous vibration.	Speed control or position control	page 8-51
Vibration Suppression	This function effectively suppresses residual vibration if it occurs when positioning.	Position control	page 8-56
Speed Ripple Compensation	This function reduces the ripple in the motor speed.	Speed control, position control, or torque control	page 8-60
Additional Adjustment Function	This function combines autotuning with custom tuning. You can use it to improve adjustment results.	Depends on the functions that you use.	page 8-66
Manual Tuning	You can manually adjust the servo gains to adjust the response.	Speed control, position control, or torque control	page 8-76

8.1.2 Diagnostic Tool

You can use the following tools to measure the frequency characteristics of the machine and set notch filters.

Diagnostic Tool	Outline	Applicable Control Methods	Reference
Mechanical Analysis	The machine is subjected to vibration to detect resonance frequencies. The measurement results are displayed as waveforms or numeric data.	Speed control, position control, or torque control	page 8-93
Easy FFT	The machine is subjected to vibration to detect resonance frequencies. The measurement results are displayed only as numeric data.	Speed control, position control, or torque control	page 8-95

8.2 Monitoring Methods

You can use the data tracing function of the SigmaWin+ or the analog monitor signals of the SERVOPACK for monitoring. If you perform custom tuning or manual tuning, always use the above functions to monitor the machine operating status and SERVOPACK signal waveform while you adjust the servo gains.

Check the adjustment results with the following response waveforms.

- Position Control

Item	Unit	
	Rotary Servomotor	Linear Servomotor
Torque reference	%	
Feedback speed	min^{-1}	mm/s
Position reference speed	min^{-1}	mm/s
Position deviation	Reference units	

- Speed Control

Item	Unit	
	Rotary Servomotor	Linear Servomotor
Torque reference	%	
Feedback speed	min^{-1}	mm/s
Reference speed	min^{-1}	mm/s

- Torque Control

Item	Unit	
	Rotary Servomotor	Linear Servomotor
Torque reference	%	
Feedback speed	min^{-1}	mm/s

8.3 Precautions to Ensure Safe Tuning

⚠ CAUTION

- Observe the following precautions when you perform tuning.
  - Do not touch the rotating parts of the motor when the servo is ON.
  - Before starting the Servomotor, make sure that an emergency stop can be performed at any time.
  - Make sure that trial operation has been successfully performed without any problems.
  - Provide an appropriate stopping device on the machine to ensure safety.

Perform the following settings in a way that is suitable for tuning.

8.3.1 Overtravel Settings

Overtravel settings are made to force the Servomotor to stop for a signal input from a limit switch when a moving part of the machine exceeds the safe movement range.

Refer to the following section for details.

☞ *5.12 Overtravel and Related Settings* on page 5-31

8.3.2 Torque Limit Settings

You can limit the torque that is output by the Servomotor based on calculations of the torque required for machine operation. You can use torque limits to reduce the amount of shock applied to the machine when problems occur, such as collisions or interference. If the torque limit is lower than the torque that is required for operation, overshooting or vibration may occur.

Refer to the following section for details.

☞ *6.11 Selecting Torque Limits* on page 6-64

8.3.3 Setting the Position Deviation Overflow Alarm Level

The position deviation overflow alarm is a protective function that is enabled when the SERVOPACK is used in position control.

If the alarm level is set to a suitable value, the SERVOPACK will detect excessive position deviation and will stop the Servomotor if the Servomotor operation does not agree with the reference.

The position deviation is the difference between the position reference value and the actual position.

You can calculate the position deviation from the position loop gain (Pn102) and the motor speed with the following formula.

- Rotary Servomotors

$$\text{Position deviation [reference units]} = \frac{\text{Motor speed [min}^{-1}\text{]}}{60} \times \frac{\text{Encoder resolution}^{*1}}{\text{Pn102 [0.1/s]/10}^{*2,\,*3}} \times \frac{\text{Pn210}}{\text{Pn20E}}$$

- Linear Servomotors

$$\text{Position deviation [reference units]} = \frac{\text{Motor speed [mm/s]}}{\text{Pn102 [0.1/s]/10}^{*2,\,*3}} \times \frac{\text{Resolution}}{\text{Linear encoder pitch [}\mu\text{m]/1,000}} \times \frac{\text{Pn210}}{\text{Pn20E}}$$

Position Deviation Overflow Alarm Level (Pn520) [setting unit: reference units]

- Rotary Servomotors

$$Pn520 > \frac{\text{Maximum motor speed [min}^{-1}\text{]}}{60} \times \frac{\text{Encoder resolution}^{*1}}{\text{Pn102 [0.1/s]/10}^{*2,\,*3}} \times \frac{Pn210}{Pn20E} \times \underline{\underline{(1.2 \text{ to } 2)^{*4}}}$$

- Linear Servomotors

$$Pn520 > \frac{\text{Maximum motor speed [mm/s]}}{\text{Pn102 [0.1/s]/10}^{*2,\,*3}} \times \frac{\text{Resolution}}{\text{Linear encoder pitch [μm]/1,000}} \times \frac{Pn210}{Pn20E} \times \underline{\underline{(1.2 \text{ to } 2)^{*4}}}$$

*1. Refer to the following section for details.
☞ *5.16 Electronic Gear Settings* on page 5-46

*2. When model following control (Pn140 = n.□□□1) is enabled, use the setting of Pn141 (Model Following Control Gain) instead of the setting of Pn102 (Position Loop Gain).

*3. To check the setting of Pn102 on the Digital Operator, change the parameter display setting to display all parameters (Pn00B = n.□□□1).

*4. The underlined coefficient "× (1.2 to 2)" adds a margin to prevent an A.d00 alarm (Position Deviation Overflow) from occurring too frequently.

If you set a value that satisfies the formula, an A.d00 alarm (Position Deviation Overflow) should not occur during normal operation.
If the Servomotor operation does not agree with the reference, position deviation will occur, an error will be detected, and the Servomotor will stop.

The following calculation example uses a Rotary Servomotor with a maximum motor speed of 6,000 and an encoder resolution of 16,777,216 (24 bits). Pn102 is set to 400. $\frac{Pn210}{Pn20E} = \frac{1}{16}$

$$Pn520 = \frac{6{,}000}{60} \times \frac{16{,}777{,}216}{400/10} \times \frac{1}{16} \times 2$$

$$= 2{,}621{,}440 \times 2$$

$$= 5{,}242{,}880 \text{ (default setting of Pn520)}$$

If the acceleration/deceleration rate required for the position reference exceeds the tracking capacity of the Servomotor, the tracking delay will increase and the position deviation will no longer satisfy the above formulas. If this occurs, lower the acceleration/deceleration rate so that the Servomotor can follow the position reference or increase the position deviation overflow alarm level.

Related Parameters

Pn520	Position Deviation Overflow Alarm Level				Position
	Setting Range	Setting Unit	Default Setting	When Enabled	Classification
	1 to 1,073,741,823	1 reference unit	5,242,880	Immediately	Setup
Pn51E	Position Deviation Overflow Warning Level				Position
	Setting Range	Setting Unit	Default Setting	When Enabled	Classification
	10 to 100	1%	100	Immediately	Setup

Related Alarms

Alarm Number	Alarm Name	Alarm Meaning
A.d00	Position Deviation Overflow	This alarm is displayed when the position deviation exceeds the setting of Pn520 (Position Deviation Overflow Alarm Level).

Related Warnings

Warning Number	Warning Name	Warning Meaning
A.900	Position Deviation Overflow	This warning occurs if the position deviation exceeds the specified percentage (Pn520 × Pn51E/100).

8.3.4 Vibration Detection Level Setting

You can set the vibration detection level (Pn312) to more accurately detect A.520 alarms (Vibration Alarm) and A.911 warnings (Vibration) when vibration is detected during machine operation.

Set the initial vibration detection level to an appropriate value. Refer to the following section for details.

☞ *6.15 Initializing the Vibration Detection Level* on page 6-99

8.3.5 Setting the Position Deviation Overflow Alarm Level at Servo ON

If the servo is turned ON when there is a large position deviation, the Servomotor will attempt to return to the original position to bring the position deviation to 0, which may create a hazardous situation. To prevent this, you can set a position deviation overflow alarm level at servo ON to restrict operation.

The related parameters and alarms are given in the following tables.

Related Parameters

Pn526	Position Deviation Overflow Alarm Level at Servo ON			Position	
	Setting Range	Setting Unit	Default Setting	When Enabled	Classification
	1 to 1,073,741,823	1 reference unit	5,242,880	Immediately	Setup
Pn528	Position Deviation Overflow Warning Level at Servo ON			Position	
	Setting Range	Setting Unit	Default Setting	When Enabled	Classification
	10 to 100	1%	100	Immediately	Setup

- Rotary Servomotors

Pn529	Speed Limit Level at Servo ON			Position	
	Setting Range	Setting Unit	Default Setting	When Enabled	Classification
	0 to 10,000	1 min^{-1}	10,000	Immediately	Setup

- Linear Servomotors

Pn584	Speed Limit Level at Servo ON			Position	
	Setting Range	Setting Unit	Default Setting	When Enabled	Classification
	0 to 10,000	1 mm/s	10,000	Immediately	Setup

Related Alarms

Alarm Number	Alarm Name	Alarm Meaning
A.d01	Position Deviation Overflow Alarm at Servo ON	This alarm occurs if the servo is turned ON after the position deviation exceeded the setting of Pn526 (Position Deviation Overflow Alarm Level at Servo ON) while the servo was OFF.
A.d02	Position Deviation Overflow Alarm for Speed Limit at Servo ON	If position deviation remains in the deviation counter, the setting of Pn529 or Pn584 (Speed Limit Level at Servo ON) will limit the speed when the servo is turned ON. This alarm occurs if reference pulses are input and the setting of Pn520 (Position Deviation Overflow Alarm Level) is exceeded.

Refer to the following section for information on troubleshooting alarms.

☞ *12.2.3 Resetting Alarms* on page 12-41

Related Warnings

Warning Number	Warning Name	Warning Meaning
A.901	Position Deviation Overflow Warning at Servo ON	This warning occurs if the servo is turned ON while the position deviation exceeds the specified percentage (Pn526 × Pn528/100).

8.4 Tuning-less Function

The tuning-less function performs autotuning to obtain a stable response regardless of the type of machine or changes in the load. Autotuning is started when the servo is turned ON.

⚠ CAUTION

- The tuning-less function is disabled during torque control.
- The Servomotor may momentarily emit a sound or vibrate the first time the servo is turned ON after the Servomotor is connected to the machine.
  This sound is caused by setting the automatic notch filter. It does not indicate a problem. However, if this sound or vibration continues, manually set a function to suppress vibration (e.g., a notch filter).
- The Servomotor may vibrate if it exceeds the allowable load moment of inertia.
  If that occurs, set the tuning-less load level to 2 (Pn170 = n.2□□□) or reduce the tuning-less rigidity level (Pn170 = n.□X□□).
- To ensure safety, make sure that you can perform an emergency stop at any time when you execute the tuning-less function.

8.4.1 Application Restrictions

The following application restrictions apply to the tuning-less function.

Function	Executable?	Remarks
Vibration Detection Level Initialization	○	–
Moment of Inertia Estimation	×	Disable the tuning-less function (Pn170 = n.□□□0) before you execute moment of inertia estimation.
Autotuning without Host Reference	×	Disable the tuning-less function (Pn170 = n.□□□0) before you execute autotuning without a host reference.
Autotuning with Host Reference	×	–
Custom Tuning	×	–
Anti-Resonance Control Adjustment	×	–
Vibration Suppression	×	–
Easy FFT	○	The tuning-less function is disabled while you execute Easy FFT and then it is enabled when Easy FFT has been completed.
Friction Compensation	×	–
Gain Selection	×	–
Mechanical Analysis	○	The tuning-less function is disabled while you execute mechanical analysis and then it is enabled when mechanical analysis has been completed.

* ○: Yes ×: No

8.4.2 Operating Procedure

The tuning-less function is enabled in the default settings. No specific procedure is required. You can use the following parameter to enable or disable the tuning-less function.

Parameter		Meaning	When Enabled	Classification
Pn170	n.□□□0	Disable tuning-less function.	After restart	Setup
	n.□□□1 (default setting)	Enable tuning-less function.		
	n.□□0□ (default setting)	Use for speed control.		
	n.□□1□	Use for speed control and use host controller for position control.		

When you enable the tuning-less function, you can select the tuning-less type. Normally, set Pn14F to n.□□2□ (Use tuning-less type 3) (default setting). If compatibility with previous models is required, set Pn14F to n.□□0□ (Use tuning-less type 1) or n.□□1□ (Use tuning-less type 2).

Parameter		Meaning	When Enabled	Classification
Pn14F	n.□□0□	Use tuning-less type 1.	After restart	Tuning
	n.□□1□	Use tuning-less type 2. (The noise level is improved more than with tuning-less type 1.)		
	n.□□2□ (default setting)	Use tuning-less type 3.		

Tuning-less Level Settings

If vibration or other problems occur, change the tuning-less levels. To change the tuning-less levels, use the SigmaWin+.

◆ Preparations

Always check the following before you set the tuning-less levels.

- The tuning-less function must be enabled (Pn170 = n.□□□1).
- The test without a motor function must be disabled (Pn00C = n.□□□0).

◆ Procedure

Use the following procedure to set the tuning-less levels.

In addition to the following procedure, you can also set the parameters directly. Refer to *Related Parameters*, below, for the parameters to set.

1. Click the Servo Drive Button in the workspace of the Main Window of the SigmaWin+.
2. Select **Response Level Setting** in the Menu Dialog Box.
   The Tuning-less Level Setting-Adj Dialog Box will be displayed.

3. Click the ▲ or ▼ Button to adjust the tuning-less level setting. Increase the tuning-less level setting to increase the response. Decrease the tuning-less level setting to suppress vibration.
The default response level setting is 4.

Tuning-less Level	Description	Remarks
7	Response level: High	You cannot select these levels if tuning-less type 1 or 2 (Pn14F = n.□□0□ or n.□□1□) is used.
6		
5		
4 (default setting)		–
3		
2		
1		
0	Response level: Low	

4. Click the **Completed** Button.
The adjustment results will be saved in the SERVOPACK.

◆ Related Parameters

■ Tuning-less Rigidity Level

If you use tuning-less type 1 or 2 (Pn14F = n.□□0□ or n.□□1□), set the tuning-less level to between 0 and 4 (Pn170 = n.□0□□ to n.□4□□). Do not set the tuning-less level to between 5 and 7 (Pn170 = n.□5□□ to n.□7□□).

Parameter		Description	When Enabled	Classification
Pn170	n.□0□□	Tuning-less rigidity level 0 (low rigidity)	Immediately	Setup
	n.□1□□	Tuning-less rigidity level 1		
	n.□2□□	Tuning-less rigidity level 2		
	n.□3□□	Tuning-less rigidity level 3		
	n.□4□□ (default setting)	Tuning-less rigidity level 4		
	n.□5□□	Tuning-less rigidity level 5		
	n.□6□□	Tuning-less rigidity level 6		
	n.□7□□	Tuning-less rigidity level 7 (high rigidity)		

■ Tuning-less Load Level

Parameter		Description	When Enabled	Classification
Pn170	n.0□□□	Tuning-less load level 0	Immediately	Setup
	n.1□□□ (default setting)	Tuning-less load level 1		
	n.2□□□	Tuning-less load level 2		

8.4.3 Troubleshooting Alarms

An A.521 alarm (Autotuning Alarm) will occur if a resonant sound occurs or if excessive vibration occurs during position control. If an alarm occurs, implement the following measures.

- Resonant Sound
  Decrease the setting of Pn170 = n.X□□□ or the setting of Pn170 = n.□X□□.
- Excessive Vibration during Position Control
  Increase the setting of Pn170 = n.X□□□ or decrease the setting of Pn170 = n.□X□□.

8.4.4 Parameters Disabled by Tuning-less Function

When the tuning-less function is enabled (Pn170 = n.□□□1) (default setting), the parameters in the following table are disabled.

Item	Parameter Name	Parameter Number
Gain-Related Parameters	Speed Loop Gain Second Speed Loop Gain	Pn100 Pn104
	Speed Loop Integral Time Constant Second Speed Loop Integral Time Constant	Pn101 Pn105
	Position Loop Gain Second Position Loop Gain	Pn102 Pn106
	Moment of Inertia Ratio	Pn103
Advanced Control-Related Parameters	Friction Compensation Function Selection	Pn408 = n.X□□□
	Anti-Resonance Control Selection	Pn160= n.□□□X
Gain Selection-Related Parameters	Gain Switching Selection	Pn139= n.□□□X

The tuning-less function is disabled during torque control, Easy FFT, and mechanical analysis for a vertical axis. The gain-related parameters in the above table are enabled for torque control, Easy FFT, and mechanical analysis. Of these, Pn100, Pn103, and Pn104 are enabled for torque control.

8.4.5 Automatically Adjusted Function Setting

You can also automatically adjust notch filters.

Normally, set Pn460 to n.□1□□ (Adjust automatically) (default setting). Vibration is automatically detected and a notch filter is set.
Set Pn460 to n.□0□□ (Do not adjust automatically) only if you do not change the setting of the notch filter before you execute the tuning-less function.

Parameter		Meaning	When Enabled	Classification
Pn460	n.□0□□	Do not adjust the second stage notch filter automatically when the tuning-less function is enabled or during execution of autotuning without a host reference, autotuning with a host reference, and custom tuning.	Immediately	Tuning
	n.□1□□ (default setting)	Adjust the second stage notch filter automatically when the tuning-less function is enabled or during execution of autotuning without a host reference, autotuning with a host reference, and custom tuning.		

8.4.6 Related Parameters

The following parameters are automatically adjusted when you execute the tuning-less function.

Do not manually change the settings of these parameters after you have enabled the tuning-less function.

Parameter	Name
Pn401	First Stage First Torque Reference Filter Time Constant
Pn40A	First Stage Notch Filter Q Value
Pn40C	Second Stage Notch Filter Frequency
Pn40D	Second Stage Notch Filter Q Value

8.5 Estimating the Moment of Inertia

This section describes how the moment of inertia is calculated.

The moment of inertia ratio that is calculated here is used in other tuning functions. You can also estimate the moment of inertia during autotuning without a host reference. Refer to the following section for the procedure.

☞ *8.6.4 Operating Procedure* on page 8-26

8.5.1 Outline

The moment of inertia during operation is automatically calculated by the SERVOPACK for round-trip (forward and reverse) operation. A reference from the host controller is not used.

The moment of inertia ratio (i.e., the ratio of the load moment of inertia to the motor moment of inertia) is a basic parameter for adjusting gains. It must be set as accurately as possible.

Although the load moment of inertia can be calculated from the weight and structure of the mechanisms, doing so is very troublesome and calculating it accurately can be very difficult with the complex mechanical structures that are used these days. With an estimate of the moment of inertia, you can obtain an accurate load moment of inertia simply by running the Servomotor in the actual system in a forward and reverse direction a few times.

The Servomotor is operated with the following specifications.

- Maximum speed: ±1,000 min^{-1} (can be changed)
- Acceleration rate: ±20,000 min^{-1}/s (can be changed)
- Travel distance: ±2.5 rotations max. (can be changed)

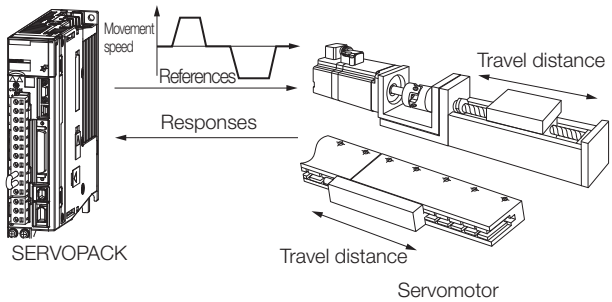

Note: Execute moment of inertia estimation after jogging to a position that ensures a suitable range of motion.

8.5.2 Restrictions

The following restrictions apply to estimating the moment of inertia.

Systems for which Execution Cannot Be Performed

- When the machine system can move only in one direction
- When the range of motion is 0.5 rotations or less

Systems for Which Adjustments Cannot Be Made Accurately

- When a suitable range of motion is not possible
- When the moment of inertia changes within the set operating range
- When the machine has high dynamic friction
- When the rigidity of the machine is low and vibration occurs when positioning is performed
- When the position integration function is used
- When proportional control is used

  Note: If you specify calculating the moment of inertia, an error will occur if the /P-CON (Proportional Control) signal changes to specify the proportional action during moment of inertia estimation.
- When mode switching is used

  Note: If you specify moment of inertia estimation, mode switching will be disabled and PI control will be used while the moment of inertia is being calculated. Mode switching will be enabled after moment of inertia estimation has been completed.
- When speed feedforward or torque feedforward is input

Preparations

Always check the following before you execute moment of inertia estimation.

- The main circuit power supply must be ON.
- There must be no overtravel.
- The servo must be OFF.
- The control method must not be set to torque control.
- The gain selection switch must be set to manual gain selection (Pn139 = n.□□□0).
- The first gains must be selected.
- The test without a motor function must be disabled (Pn00C = n.□□□0).
- There must be no alarms or warnings.
- There must be no hard wire base block (HWBB).
- The parameters must not be write prohibited.
- The tuning-less function must be disabled (Pn170 = n.□□□0).

8.5.3 Applicable Tools

The following table lists the tools that you can use to estimate the moment of inertia.

Tool	Fn No./Function Name	Operating Procedure Reference
Panel Operator	You cannot estimate the moment of inertia from the Panel Operator.	
Digital Operator	You cannot estimate the moment of inertia from the Digital Operator.	
SigmaWin+	***Tuning - Tuning***	☞ *8.5.4 Operating Procedure* on page 8-18

8.5.4 Operating Procedure

Use the following procedure to estimate the moment of inertia ratio.

⚠ WARNING

- **Estimating the moment of inertia requires operating the Servomotor and therefore presents hazards. Observe the following precautions.**
  - Confirm safety around moving parts.
    This function involves automatic operation with vibration. Make sure that you can perform an emergency stop (to turn OFF the power supply) at any time. There will be movement in both directions within the set range of movement. Check the range of movement and the directions and implement protective controls for safety, such as the overtravel functions.

⚠ CAUTION

- **Be aware of the following points if you cancel the moment of inertia estimation while the Servomotor is operating.**
  - If you cancel operation with the **Servo OFF** Button, the Servomotor will stop according to setting of the Servo OFF stopping method (Pn001 = n.□□□X).
  - If you cancel operation with the **Cancel** Button, the Servomotor will decelerate to a stop and then enter a zero-clamped state.

1. Click the Servo Drive Button in the workspace of the Main Window of the SigmaWin+.

2. Select **Tuning** in the Menu Dialog Box.
   The Tuning Dialog Box will be displayed.
   Click the **Cancel** Button to cancel tuning.

3. Click the **Execute** Button.

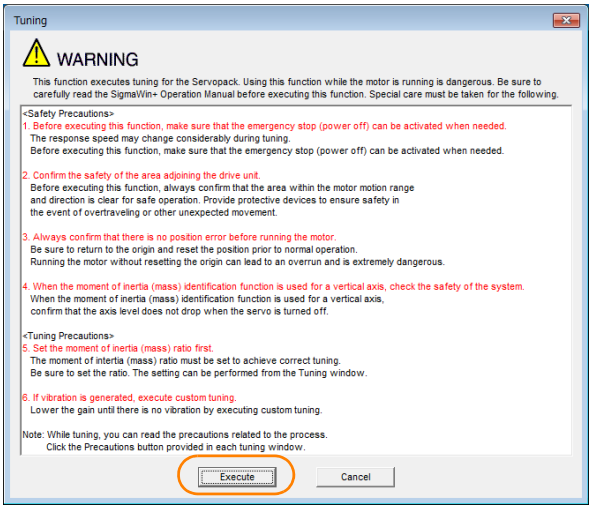

4. Click the **Execute** Button.

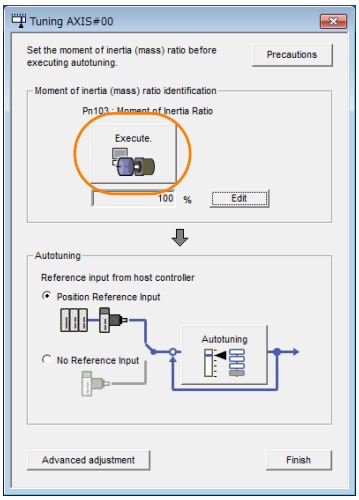

5. Set the conditions as required.

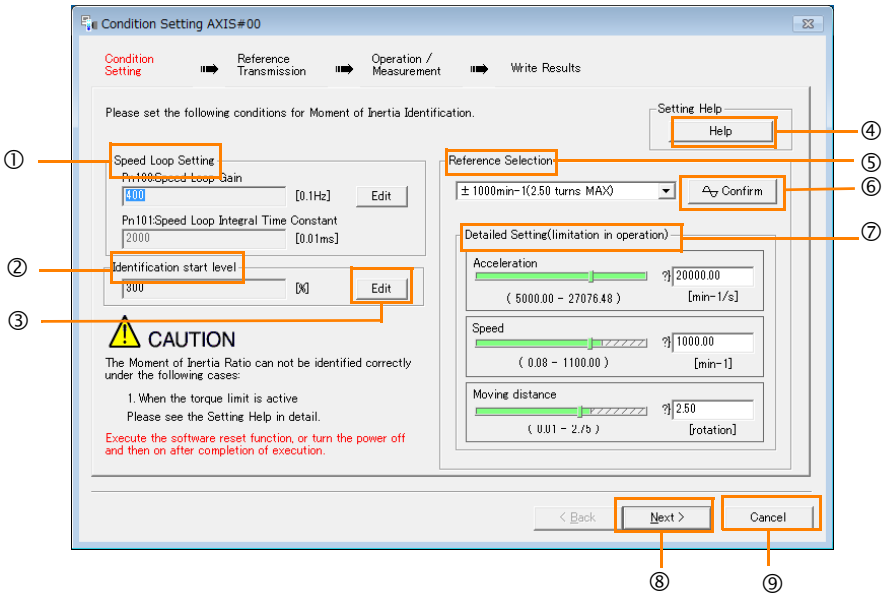

① **Speed Loop Setting** Area
Make the speed loop settings in this area.
If the speed loop response is too bad, it will not be possible to measure the moment of inertia ratio accurately.
The values for the speed loop response that are required for moment of inertia estimation are set for the default settings. It is normally not necessary to change these settings.
If the default speed loop gain is too high for the machine (i.e., if vibration occurs), lower the setting. It is not necessary to increase the setting any farther.

② **Identification Start Level** Group
This is the setting of the moment of inertia calculation starting level.
If the load is large or the machine has low rigidity, the torque limit may be applied, causing moment of inertia estimation to fail.
If that occurs, estimation may be possible if you double the setting of the start level.

③ **Edit** Buttons
Click the button to display a dialog box to change the settings related to the speed loop or estimation start level.

④ **Help** Button
Click this button to display guidelines for setting the reference conditions. Make the following settings as required.

- Operate the Servomotor to measure the load moment of inertia of the machine in comparison with the rotor moment of inertia.
- Set the operation mode, reference pattern (maximum acceleration rate, maximum speed, and maximum travel distance), and speed loop-related parameters.
- Correct measurement of the moment of inertia ratio may not be possible depending on the settings. Set suitable settings using the measurement results as reference.

⑤ **Reference Selection** Area
Either select the reference pattern for estimation processing from the box, or set the values in the **Detailed Setting** Group. Generally speaking, the larger the maximum acceleration rate is, the more accurate the moment of inertia estimation will be.
Set the maximum acceleration range within the possible range of movement considering the gear ratio, e.g., the pulley diameters or ball screw pitch.

⑥ **Confirm** Button
Click this button to display the Reference Confirmation Dialog Box.

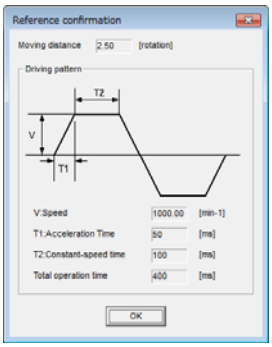

⑦ **Detailed Setting** Area
You can change the settings by moving the bars or directly inputting the settings to create the required reference pattern.

⑧ **Next** Button
Click this button to display the Reference Transmission Dialog Box.

⑨ **Cancel** Button
Click this button to return to the Tuning Dialog Box.

⚠ CAUTION

- The travel distance is the distance for one operation in the forward or reverse direction. During multiple operations, the operation starting position may move in one direction or the other. Confirm the possible operating range for each measurement or operation.
- Depending on the parameter settings and the moment of inertia of the machine, overshooting may occur and may cause the maximum speed setting to be exceeded temporarily. Allow sufficient leeway in the settings.

Information

When Measurement Is Not Correct
Estimating the moment of inertia ratio cannot be performed correctly if the torque limit is activated. Adjust the limits or reduce the acceleration rate in the reference selection so that the torque limit is not activated.

6. Click the **Next** Button.
The Reference Transmission Dialog Box will be displayed.

7. Click the **Start** Button.

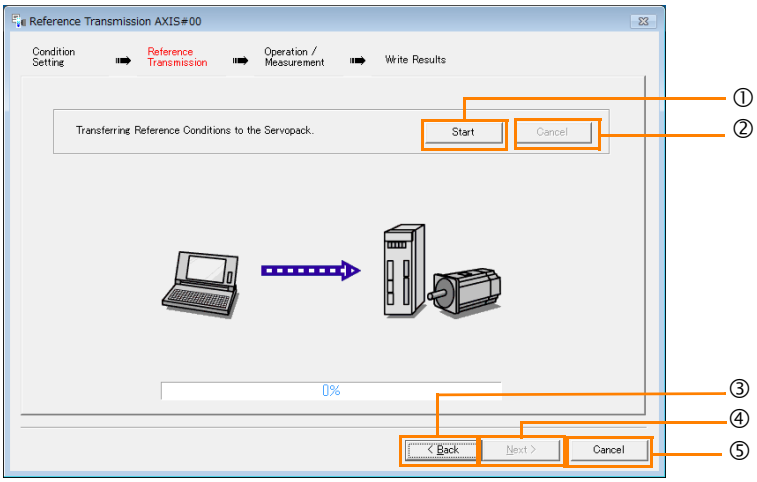

① **Start** Button
The reference conditions will be transferred to the SERVOPACK. A progress bar will show the progress of the transfer.

② **Cancel** Button
The **Cancel** Button is enabled only while data is being transferred to the SERVOPACK. You cannot use it after the transfer has been completed.

③ **Back** Button
This button returns you to the Condition Setting Dialog Box. It is disabled while data is being transferred.

④ **Next** Button
This button is enabled only when the data has been transferred correctly. You cannot use it if an error occurs or if you cancel the transfer before it is completed.
Click the **Next** Button to display the Operation/Measurement Dialog Box.

⑤ **Cancel** Button
This button cancels processing and returns you to the Tuning Dialog Box.

8. Click the **Next** Button.
The Operation/Measurement Dialog Box will be displayed.

9. Click the **Servo On** Button.

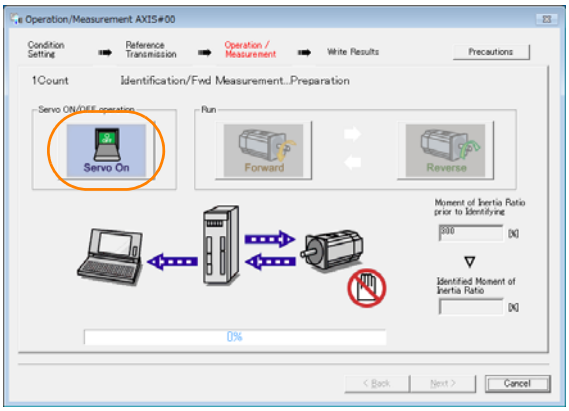

10. Click the **Forward** Button.
The Servomotor shaft will rotate in the forward direction and the measurement will start. After the measurement and data transfer have been completed, the **Reverse** Button will be displayed in color.

11. Click the **Reverse** Button.

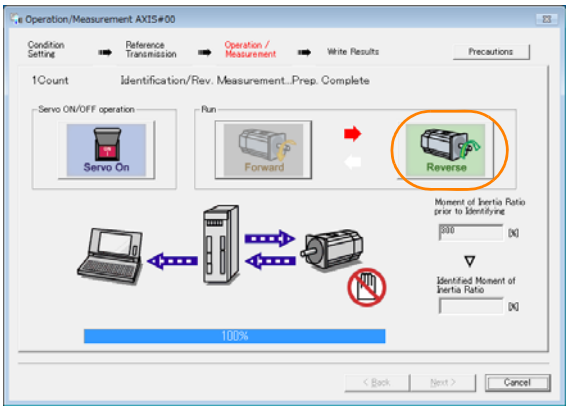

The Servomotor shaft will rotate in the reverse direction and the measurement will start. After the measurement and data transfer have been completed, the **Forward** Button will be displayed in color.

12. Repeat steps 9 to 11 until the **Next** Button is enabled.
Measurements are performed from 2 to 7 times and then verified. The number of measurements is displayed in upper left corner of the dialog box. A progress bar at the bottom of the dialog box will show the progress of the transfer each time.

13. When the measurements have been completed, click the **Servo On** Button to turn OFF the servo.

14. Click the **Next** Button.
The Write Results Dialog Box will be displayed.

Information

If you click the **Next** Button before you turn OFF the servo, the following Dialog Box will be displayed. Click the **OK** Button to turn OFF the servo.

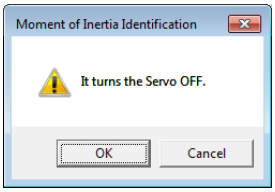

15. Click the **Writing Results** Button.

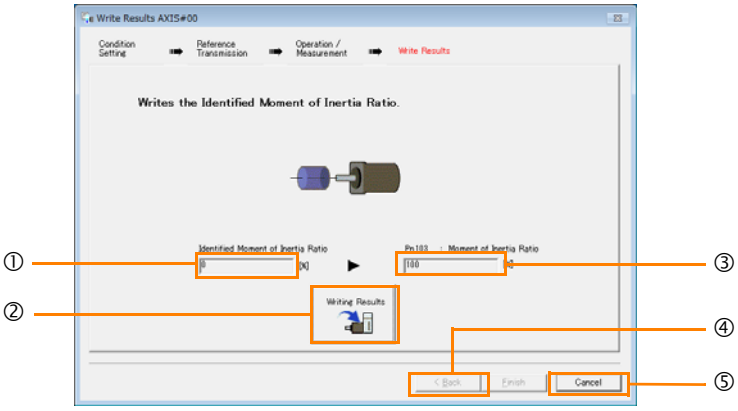

① **Identified Moment of Inertia Ratio** Box
The moment of inertia ratio that was found with operation and measurements is displayed here.

② **Writing Results** Button
If you click this button, Pn103 (Moment of Inertia Ratio) in the SERVOPACK is set to the value that is displayed for the identified moment of inertia ratio.

③ **Pn103: Moment of Inertia Ratio** Box
The value that is set for the parameter is displayed here.
After you click the **Writing Results** Button, the value that was found with operation and measurements will be displayed as the new setting.

④ **Back** Button
This button is disabled.

⑤ **Cancel** Button
This button will return you to the Tuning Dialog Box.

16. Confirm that the **Identified Moment of Inertia Ratio** Box and the **Pn103: Moment of Inertia Ratio** Box show the same value and then click the **Finish** Button.

17. Click the **OK** Button.

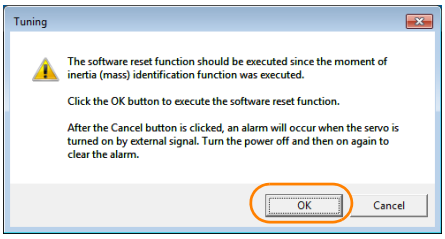

18. Click the **Execute** Button.

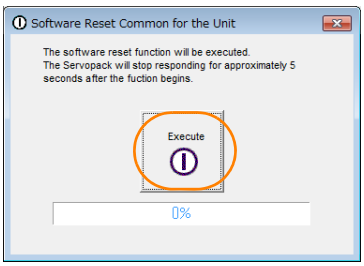

If the setting of the moment of inertia ratio (Pn103) was changed, the new value will be saved and the Tuning Dialog Box will be displayed again.

This concludes the procedure to estimate the moment of inertia ratio.

8.6 Autotuning without Host Reference

This section describes autotuning without a host reference.

Important

- Autotuning without a host reference performs adjustments based on the setting of the speed loop gain (Pn100). Therefore, precise adjustments cannot be made if there is vibration when adjustments are started. Make adjustments after lowering the speed loop gain (Pn100) until vibration is eliminated.
- You cannot execute autotuning without a host reference if the tuning-less function is enabled (Pn170 = n.□□□1 (default setting)). Disable the tuning-less function (Pn170 = n.□□□0) before you execute autotuning without a host reference.
- If you change the machine load conditions or drive system after you execute autotuning without a host reference and then you execute autotuning without a host reference with moment of inertia estimation specified, use the following parameter settings. If you execute autotuning without a host reference for any other conditions, the machine may vibrate and may be damaged.

  Pn140 = n.□□□0 (Do not use model following control.)
  Pn160 = n.□□□0 (Do not use anti-resonance control.)
  Pn408 = n.00□0 (Disable friction compensation, first stage notch filter, and second stage notch filter.)

  Note: If you are using the Digital Operator and the above parameters are not displayed, change the parameter display setting to display all parameters (Pn00B = n.□□□1) and then turn the power supply OFF and ON again.

8.6.1 Outline

For autotuning without a host reference, operation is automatically performed by the SERVOPACK for round-trip (forward and reverse) operation to adjust for machine characteristics during operation. A reference from the host controller is not used.

The following items are adjusted automatically.

- Moment of inertia ratio
- Gains (e.g., speed loop gain and position loop gain)
- Filters (torque reference filter and notch filters)
- Friction compensation
- Anti-resonance control
- Vibration suppression (only for mode 2 or 3)

Refer to the following section for details on the parameters that are adjusted.

☞ *8.6.7 Related Parameters* on page 8-34

The Servomotor is operated with the following specifications.

Maximum speed	Rated motor speed × $\frac{2}{3}$	
Acceleration Torque	Rated motor torque: Approx. 100% Note: The acceleration torque depends on the setting of the moment of inertia ratio (Pn103), and the influences of machine friction and external disturbance.	
Travel Distance	Rotary Servomotors	You can set the desired travel distance. The default setting is for a value equivalent to 3 Servomotor shaft rotations.
	Direct Drive Servomotors	You can set the desired travel distance. The default setting is for a value equivalent to 0.3 rotations.
	Linear Servomotors	You can set the desired travel distance in increments of 1,000 reference units. (The default setting is for 90 mm.)

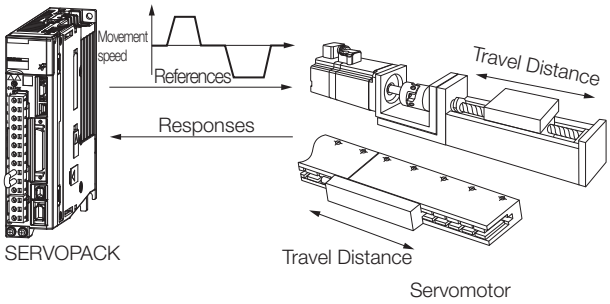

Note: Execute autotuning without a host reference after jogging to a position that ensures a suitable range of motion.

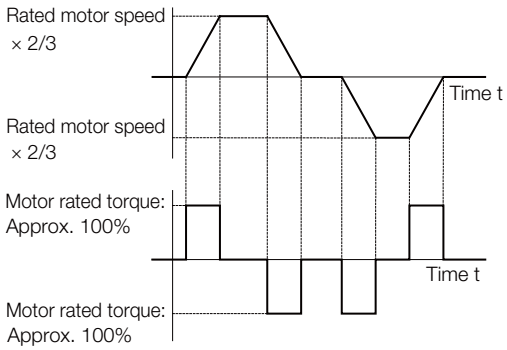

Example of Automatic Operation Pattern

⚠ WARNING

- **Autotuning without a host reference requires operating the Servomotor and therefore presents hazards. Observe the following precaution.**
  - Confirm safety around moving parts.
    This function involves automatic operation with vibration. Make sure that you can perform an emergency stop (to turn OFF the power supply) at any time. There will be movement in both directions within the set range of movement. Check the range of movement and the directions and implement protective controls for safety, such as the overtravel functions.

8.6.2 Restrictions

The following restrictions apply to autotuning without a host reference.

If you cannot use autotuning without a host reference because of these restrictions, use autotuning with a host reference or custom tuning. Refer to the following sections for details.

☞ *8.7 Autotuning with a Host Reference* on page 8-35
☞ *8.8 Custom Tuning* on page 8-42

Systems for Which Execution Cannot Be Performed

- When the machine system can move only in one direction
- When the range of motion is 0.5 rotations or less

Systems for Which Adjustments Cannot Be Made Accurately

- When a suitable range of motion is not possible
- When the moment of inertia changes within the set operating range
- When the machine has high friction
- When the rigidity of the machine is low and vibration occurs when positioning is performed
- When the position integration function is used
- When proportional control is used

  Note: If you specify calculating the moment of inertia, an error will occur if the /P-CON (Proportional Control) signal changes to specify the proportional action during moment of inertia estimation.
- When mode switching is used

  Note: If you specify moment of inertia estimation, mode switching will be disabled and PI control will be used while the moment of inertia is being calculated. Mode switching will be enabled after moment of inertia estimation has been completed.
- When speed feedforward or torque feedforward is input
- When the positioning completed width (Pn522) is too narrow

Preparations

Always check the following before you execute autotuning without a host reference.

- The main circuit power supply must be ON.
- There must be no overtravel.
- The servo must be OFF.
- The control method must not be set to torque control.
- The gain selection switch must be set to manual gain selection (Pn139 = n.□□□0).
- The first gains must be selected.
- The test without a motor function must be disabled (Pn00C = n.□□□0).
- There must be no alarms or warnings.
- There must be no hard wire base block (HWBB).
- The parameters must not be write prohibited.
- The tuning-less function must be disabled (Pn170 = n.□□□0), or the tuning-less function must be enabled (Pn170 = n.□□□1) (default setting) and moment of inertia estimation must be specified.
- If you execute autotuning without a host reference during speed control, set the mode to 1.

Information

- If you start autotuning without a host reference while the SERVOPACK is in speed control for mode 2 or 3, the SERVOPACK will change to position control automatically to perform autotuning without a host reference. The SERVOPACK will return to speed control after autotuning has been completed.
- Reference pulse input multiplication switching is disabled during autotuning without a host reference.

8.6.3 Applicable Tools

The following table lists the tools that you can use to perform autotuning without a host reference.

Tool	Fn No./Function Name	Operating Procedure Reference
Panel Operator	You cannot perform autotuning without a host reference from the Panel Operator.	
Digital Operator	Fn201	Σ-7-Series Digital Operator Operating Manual (Manual No.: SIEP S800001 33)
SigmaWin+	***Tuning - Tuning***	*8.6.4 Operating Procedure* on page 8-26

8.6.4 Operating Procedure

Use the following procedure to perform autotuning without a host reference.

⚠ CAUTION

- If you specify not estimating the moment of inertia, set the moment of inertia ratio (Pn103) correctly. If the setting greatly differs from the actual moment of inertia ratio, normal control of the machine may not be possible, and vibration may result.
- If you are using an MP3000-series Controller for phase control, set the mode selection to 1. If 2 or 3 is selected for the mode, correct phase control may not be possible.

1. Confirm that the moment of inertia ratio (Pn103) is set correctly.

2. Click the Servo Drive Button in the workspace of the Main Window of the SigmaWin+.

3. Select **Tuning** in the Menu Dialog Box.
   The Tuning Dialog Box will be displayed.
   Click the **Cancel** Button to cancel tuning.

4. Click the **Execute** Button.

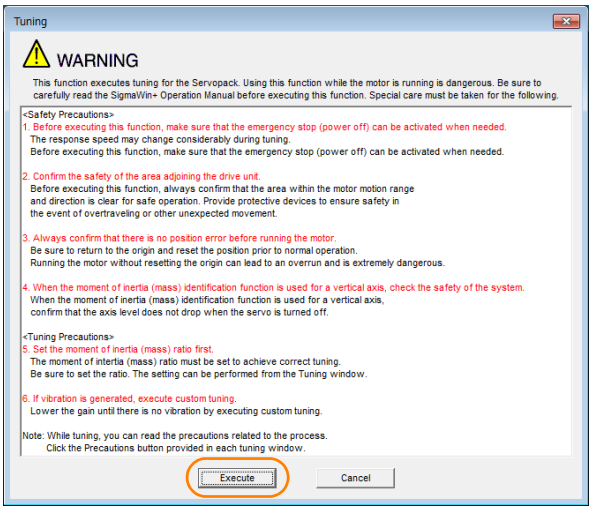

5. Select the **No Reference Input** Option in the **Autotuning** Area and then click the **Autotuning** Button.

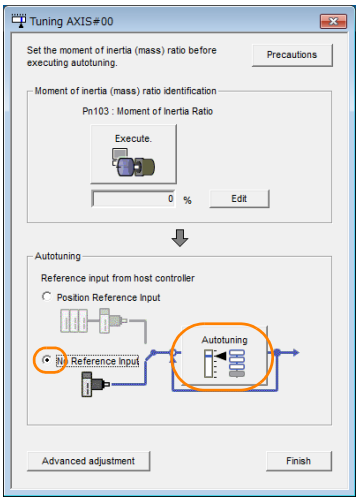

Information When the following dialog box is displayed, click the **OK** Button and then confirm that the correct moment of inertia ratio is set in Pn103 (Moment of Inertia Ratio).

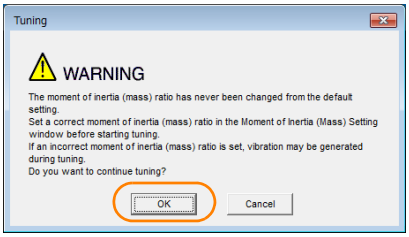

6. Set the conditions in the **Switching the load moment of inertia (load mass) identification** Box, the **Mode selection** Box, the **Mechanism selection** Box, and the **Distance Box**, and then click the **Next** Button.

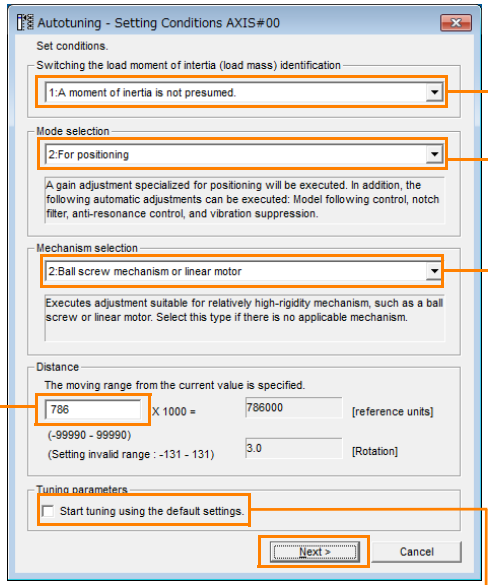

- **Switching the load moment of inertia (load mass) identification** Box
  Specify whether to estimate the moment of inertia.
  0: A moment of inertia is presumed. (default setting)
  1: A moment of inertia is not presumed.

- **Mode selection** Box
  Set the mode.

Mode Selection	Description
1: Standard	Standard gain adjustment is performed. In addition to gain adjustment, notch filters and anti-resonance control are automatically adjusted.
2: For positioning	Tuning is performed for positioning applications. In addition to gain adjustment, model following control, notch filters, anti-resonance control, and vibration suppression are automatically adjusted.
3: For positioning especially to prevent overshooting	Tuning is performed for positioning applications with emphasis on eliminating overshooting. In addition to gain adjustment, notch filters, anti-resonance control, and vibration suppression are automatically adjusted.

- **Distance** Box
  Set the travel distance.
  Movement range: -99,990,000 to +99,990,000 [reference units]
  Minimum setting increment for travel distance: 1,000 [reference units]
  Negative values are for reverse operation and positive values are for forward operation from the current position.
  Default settings:
  Rotary Servomotors: Approx. 3 rotations
  Direct Drive Servomotors: Approx. 0.3 rotations
  Linear Servomotors: Approx 90 mm
  Set the distance to the following values or higher. To ensure tuning precision, we recommend that you use approximately the default distance setting.
  Rotary Servomotors: 0.5 rotations
  Direct Drive Servomotors: 0.05 rotations
  Linear Servomotors: 5 mm

- **Mechanism selection** Box
  Select the type according to the machine element to drive.
  If there is noise or if the gain does not increase, better results may be obtained by changing the rigidity type.
  Select the type according to the following guidelines.

Mechanism Selection	Description
1: Belt mechanism	Tuning is performed for a mechanism with relatively low rigidity, e.g., a belt.
2: Ball screw mechanism or linear motor	Tuning is performed for a mechanism with relatively high rigidity, e.g., a ball screw or Linear Servomotor. Use this setting if there is no other appropriate setting.
3: Rigid model	Tuning is performed for a mechanism with high rigidity, e.g., a rigid body system.

- **Tuning parameters** Box
  Specify the parameters to use for tuning.
  If you select the **Start tuning using the default settings** Check Box, the tuning parameters will be returned to the default settings before tuning is started.

7. Click the **Servo ON** Button.

8. Click the **Start tuning** Button.

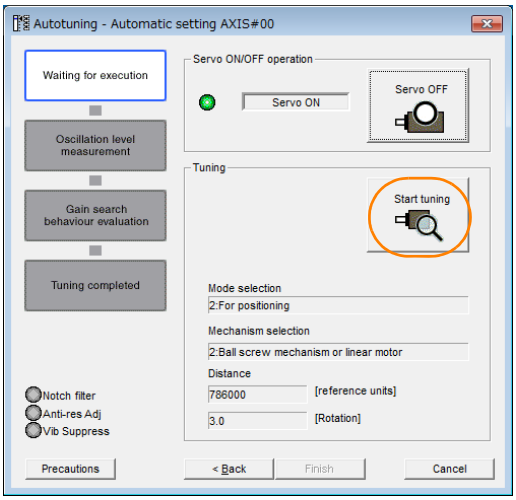

9. Confirm safety around moving parts and click the **Yes** Button.

The Servomotor will start operating and tuning will be executed.
Vibration that occurs during tuning will be detected automatically and suitable settings will be made for that vibration. When the settings have been completed, the indicators for the functions that were used will light at the lower left of the dialog box.

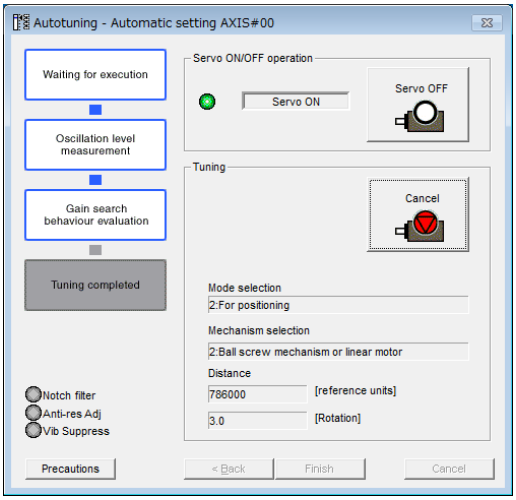

10. When tuning has been completed, click the **Finish** Button.
The results of tuning will be set in the parameters and you will return to the Tuning Dialog Box.

This concludes the procedure to perform autotuning without a host reference.

8.6.5 Troubleshooting Problems in Autotuning without a Host Reference

The following tables give the causes of and corrections for problems that may occur in autotuning without a host reference.

◆ Autotuning without a Host Reference Was Not Performed

Possible Cause	Corrective Action
Main circuit power supply is OFF.	Turn ON the main circuit power supply.
An alarm or warning occurred.	Remove the cause of the alarm or warning.
Overtraveling occurred.	Remove the cause of overtraveling.
The second gains were selected with the gain selection.	Disable automatic gain switching.
The HWBB was activated.	Release the HWBB.
The setting of the travel distance is too small.	Set the travel distance again in step 6 of the procedure.
The settings for the tuning-less function are not correct.	• Disable the tuning-less function (Pn170 = n.□□□0). • Enable the tuning-less function (Pn170 = n.□□□1) and specify moment of inertia estimation.

◆ When an Error Occurs during Execution of Autotuning without a Host Reference

Error	Possible Cause	Corrective Action
The gain adjustments were not successfully completed.	Machine vibration occurs or the positioning completion signal is not stable when the Servomotor stops.	• Increase the setting of the positioning completed width (Pn522). • Change the mode from 2 to 3. • If machine vibration occurs, suppress the vibration with the anti-resonance control adjustment and the vibration suppression function.
An error occurred during calculation of the moment of inertia.	Refer to the following section for troubleshooting information. ☞ ◆ *When an Error Occurs during Calculation of Moment of Inertia* on page 8-31	
Positioning was not completed within approximately 10 seconds after position adjustment was completed.	The positioning completed width is too narrow or proportional control is being used.	• Increase the setting of the positioning completed width (Pn522). • Turn OFF the /P-CON (Proportional Control) signal.

◆ When an Error Occurs during Calculation of Moment of Inertia

Possible Cause	Corrective Action
The SERVOPACK started calculating the moment of inertia but the calculation was not completed.	• Increase the setting of the speed loop gain (Pn100). • Increase the stroke (travel distance).
The moment of inertia fluctuated greatly and did not converge within 10 tries.	Set Pn103 (Moment of Inertia Ratio) from the machine specifications and specify not estimating the moment of inertia.
Low-frequency vibration was detected.	Double the setting of moment of inertia calculation starting level (Pn324).
The torque limit was reached.	• If you are using the torque limit, increase the torque limit. • Double the setting of moment of inertia calculation starting level (Pn324).
The speed control section changed to proportional control during calculation of the moment of inertia, e.g., the /P-CON (Proportional Control) signal was input.	Use PI control when calculating the moment of inertia.

◆ Adjustment Results Are Not Satisfactory for Position Control

You may be able to improve the adjustment results by changing the settings of the positioning completed width (Pn522) and the electronic gear ratio (Pn20E/Pn210).

If satisfactory results are still not possible, adjust the overshoot detection level (Pn561). That may improve the adjustment results.

- Pn561 = 100% (default setting)
  This will allow tuning with overshooting that is equivalent to the positioning completed width.
- Pn561 = 0%
  This will allow tuning to be performed without overshooting within the positioning completed width, but the positioning completed width may be extended.

Pn561	Overshoot Detection Level			Speed Position Torque	
	Setting Range	Setting Unit	Default Setting	When Enabled	Classification
	0 to 100	1%	100	Immediately	Setup

8.6.6 Automatically Adjusted Function Settings

You can specify whether to automatically adjust the following functions during autotuning.

◆ Automatic Notch Filters

Normally, set Pn460 to n.□1□□ (Adjust automatically) (default setting).

Vibration will be detected during autotuning without a host reference and a notch filter will be adjusted.

Set Pn460 to n.□0□□ (Do not adjust automatically) only if you do not change the setting of the notch filter before you execute this function.

Parameter		Function	When Enabled	Classification
Pn460	n.□□□0	Do not adjust the first stage notch filter automatically during execution of autotuning without a host reference, autotuning with a host reference, and custom tuning.	Immediately	Tuning
	n.□□□1 (default setting)	Adjust the first stage notch filter automatically during execution of autotuning without a host reference, autotuning with a host reference, and custom tuning.		
	n.□0□□	Do not adjust the second stage notch filter automatically when the tuning-less function is enabled or during execution of autotuning without a host reference, autotuning with a host reference, and custom tuning.		
	n.□1□□ (default setting)	Adjust the second stage notch filter automatically when the tuning-less function is enabled or during execution of autotuning without a host reference, autotuning with a host reference, and custom tuning.		

◆ Anti-Resonance Control Adjustment

This function reduces low vibration frequencies, for which the notch filters cannot be used.

Normally, set Pn160 to n.□□1□ (Adjust automatically) (default setting).
Vibration will be detected during autotuning without a host reference and anti-resonance control will be automatically adjusted.

Parameter		Function	When Enabled	Classification
Pn160	n.□□0□	Do not adjust anti-resonance control automatically during execution of autotuning without a host reference, autotuning with a host reference, and custom tuning.	Immediately	Tuning
	n.□□1□ (default setting)	Adjust anti-resonance control automatically during execution of autotuning without a host reference, autotuning with a host reference, and custom tuning.		

◆ Vibration Suppression

You can use vibration suppression to suppress transitional vibration at a low frequency from 1 Hz to 100 Hz, which is generated mainly when the machine vibrates during positioning.

Normally, set Pn140 to n.□1□□ (Adjust automatically) (default setting).
Vibration will be detected during autotuning without a host reference and vibration suppression control will be automatically set.
Set Pn140 = n.□0□□ (Do not adjust automatically) only if you do not change the settings for vibration suppression before you execute autotuning without a host reference.

Note: Autotuning without a host reference uses model following control. Therefore, it can be executed only if the mode is set to 2 or 3.

Parameter		Function	When Enabled	Classification
Pn140	n.□0□□	Do not adjust vibration suppression automatically during execution of autotuning without a host reference, autotuning with a host reference, and custom tuning.	Immediately	Tuning
	n.□1□□ (default setting)	Adjust vibration suppression automatically during execution of autotuning without a host reference, autotuning with a host reference, and custom tuning.		

◆ Friction Compensation

Friction compensation compensates for changes in the following conditions.

- Changes in the viscous resistance of the lubricant, such as grease, on the sliding parts of the machine
- Changes in the friction resistance resulting from variations in the machine assembly
- Changes in the friction resistance due to aging

The conditions for applying friction compensation depend on the mode selection.

Mode Selection Settings	Friction Compensation
1: Standard	Based on the setting of Pn408 = n.X□□□ (Friction Compensation Function Selection)*
2: For position control	Adjusted with friction compensation.
3: For position control (emphasis on overshooting)	

Parameter		Function	When Enabled	Classification
Pn408	n. 0□□□ (default setting)	Disable friction compensation.	Immediately	Setup
	n. 1□□□	Enable friction compensation.		

* Refer to the following section for details.
☞ *Required Parameter Settings* on page 8-70

◆ Feedforward

If Pn140 is set to n.0□□□ (Do not use model following control and speed/torque feedforward together (default setting)) and tuning is performed with the mode selection set to 2 or 3, feedforward (Pn109), the speed feedforward input (V-REF), and the torque feedforward input (T-REF) will be disabled.

To use the speed feedforward input (V-REF), the torque feedforward input (T-REF), and model following control from the host controller in the system, set Pn140 to n.1□□□ (Use model following control and speed/torque feedforward together).

Parameter		Function	When Enabled	Classification
Pn140	n.0□□□ (default setting)	Do not use model following control and speed/torque feedforward together.	Immediately	Tuning
	n.1□□□	Use model following control and speed/torque feedforward together.		

Refer to the following section for information on the torque feedforward input (T-REF) and the speed feedforward input (V-REF).
☞ *Torque Feedforward and Speed Feedforward* on page 8-87, ■ *Speed Feedforward* on page 8-89

> **Important**
> When model following control is used with the feedforward function, it is used to make optimum feedforward settings in the SERVOPACK. Therefore, model following control is not normally used together with either the speed feedforward input (V-REF) or torque feedforward input (T-REF) from the host controller. However, model following control can be used with the speed feedforward input (V-REF) or torque feedforward input (T-REF) if required. An unsuitable feedforward input may result in overshooting.

8.6.7 Related Parameters

The following parameters are automatically adjusted or used as reference when you execute autotuning without a host reference.

Do not change the settings while autotuning without a host reference is being executed.

Parameter	Name	Automatic Changes
Pn100	Speed Loop Gain	Yes
Pn101	Speed Loop Integral Time Constant	Yes
Pn102	Position Loop Gain	Yes
Pn103	Moment of Inertia Ratio	Yes
Pn121	Friction Compensation Gain	Yes
Pn123	Friction Compensation Coefficient	Yes
Pn124	Friction Compensation Frequency Correction	No
Pn125	Friction Compensation Gain Correction	Yes
Pn401	First Stage First Torque Reference Filter Time Constant	Yes
Pn408	Torque-Related Function Selections	Yes
Pn409	First Stage Notch Filter Frequency	Yes
Pn40A	First Stage Notch Filter Q Value	Yes
Pn40C	Second Stage Notch Filter Frequency	Yes
Pn40D	Second Stage Notch Filter Q Value	Yes
Pn140	Model Following Control-Related Selections	Yes
Pn141	Model Following Control Gain	Yes
Pn142	Model Following Control Gain Correction	Yes
Pn143	Model Following Control Bias in the Forward Direction	Yes
Pn144	Model Following Control Bias in the Reverse Direction	Yes
Pn145	Vibration Suppression 1 Frequency A	Yes
Pn146	Vibration Suppression 1 Frequency B	Yes
Pn147	Model Following Control Speed Feedforward Compensation	Yes
Pn160	Anti-Resonance Control-Related Selections	Yes
Pn161	Anti-Resonance Frequency	Yes
Pn163	Anti-Resonance Damping Gain	Yes
Pn531	Program Jogging Travel Distance	No
Pn533	Program Jogging Movement Speed for Rotary Servomotor	No
Pn585	Program Jogging Movement Speed for Linear Servomotor	No
Pn534	Program Jogging Acceleration/Deceleration Time	No
Pn535	Program Jogging Waiting Time	No
Pn536	Program Jogging Number of Movements	No

Yes: The parameter is automatically set.

No: The parameter is not automatically set, but the setting is read during execution.

8.7 Autotuning with a Host Reference

This section describes autotuning with a host reference.

> **Important**
> Autotuning with a host reference makes adjustments based on the set speed loop gain (Pn100). Therefore, precise adjustments cannot be made if there is vibration when adjustments are started. Make adjustments after lowering the speed loop gain (Pn100) until vibration is eliminated.

8.7.1 Outline

Autotuning with a host reference automatically makes optimum adjustments for operation references from the host controller.

The following items are adjusted automatically.

- Gains (e.g., speed loop gain and position loop gain)
- Filters (torque reference filter and notch filters)
- Friction compensation
- Anti-resonance control
- Vibration suppression

Refer to the following section for details on the parameters that are adjusted.

☞ *8.7.7 Related Parameters* on page 8-41

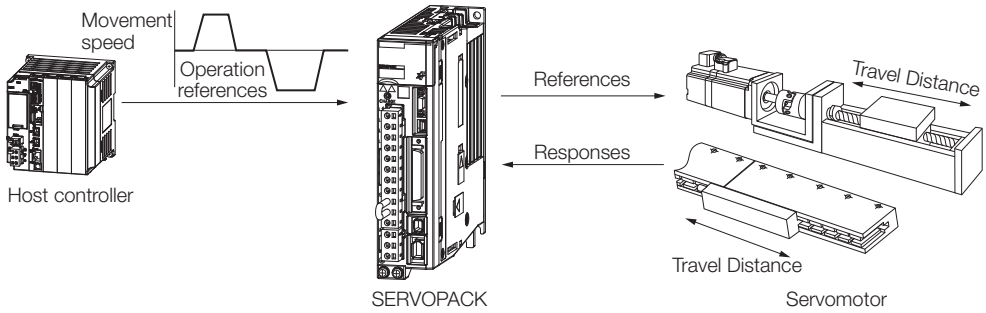

> **⚠ CAUTION**
>
> - Because autotuning with a host reference adjusts the SERVOPACK during automatic operation, vibration or overshooting may occur. To ensure safety, make sure that you can perform an emergency stop at any time.

8.7.2 Restrictions

Systems for Which Adjustments Cannot Be Made Accurately

Adjustments will not be made correctly for autotuning with a host reference in the following cases. Use custom tuning.

- When the travel distance for the reference from the host controller is equal to or lower than the setting of the positioning completed width (Pn522)
- Rotary Servomotors: When the movement speed for the reference from the host controller is equal to or lower than the setting of the rotation detection level (Pn502)
- Linear Servomotors: When the movement speed for the reference from the host controller is equal to or lower than the setting of the zero speed level (Pn581)
- When the time required to stop is 10 ms or less

- When the rigidity of the machine is low and vibration occurs when positioning is performed
- When the position integration function is used
- When proportional control is used
- When mode switching is used
- When the positioning completed width (Pn522) is too narrow

Refer to the following sections for details on custom tuning.

☞ *8.8 Custom Tuning* on page 8-42

Preparations

Always check the following before you execute autotuning with a host reference.

- The servo must be in ready status.
- There must be no overtravel.
- The servo must be OFF.
- Position control must be selected if power is supplied to the motor (i.e., when the servo is ON).
- The gain selection switch must be set to manual gain selection (Pn139 = n.□□□0).
- The first gains must be selected.
- The test without a motor function must be disabled (Pn00C = n.□□□0).
- There must be no warnings.
- The tuning-less function must be disabled (Pn170 = n.□□□0).
- The parameters must not be write prohibited.

8.7.3 Applicable Tools

The following table lists the tools that you can use to perform autotuning with a host reference.

Tool	Fn No./Function Name	Operating Procedure Reference
Panel Operator	You cannot perform autotuning without a host reference from the Panel Operator.	
Digital Operator	Fn202	Σ-7-Series Digital Operator Operating Manual (Manual No.: SIEP S800001 33)
SigmaWin+	***Tuning - Tuning***	☞ *8.7.4 Operating Procedure* on page 8-36

8.7.4 Operating Procedure

Use the following procedure to perform autotuning with a host reference.

⚠ CAUTION

- If you are using an MP3000-Series Controller for phase control, set the mode selection to 1. If 2 or 3 is selected for the mode, correct phase control may not be possible.

1. Confirm that the moment of inertia ratio (Pn103) is set correctly.

2. Click the Servo Drive Button in the workspace of the Main Window of the SigmaWin+.

3. Select **Tuning** in the Menu Dialog Box.
   The Tuning Dialog Box will be displayed.
   Click the **Cancel** Button to cancel tuning.

4. Click the **Execute** Button.

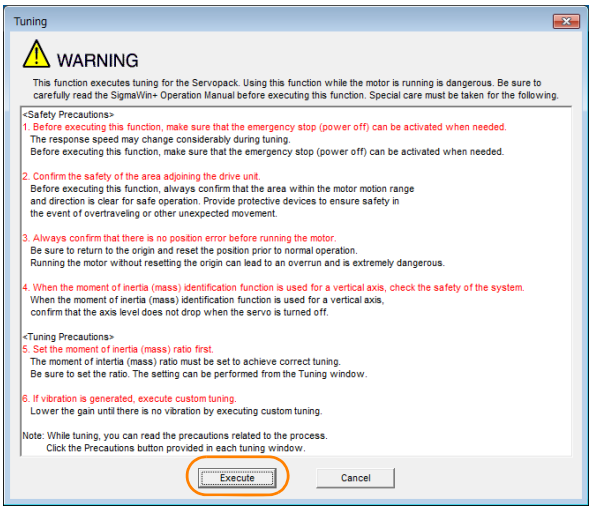

5. Select the **Position reference input** Option in the **Autotuning** Area and then click the **Autotuning** Button.

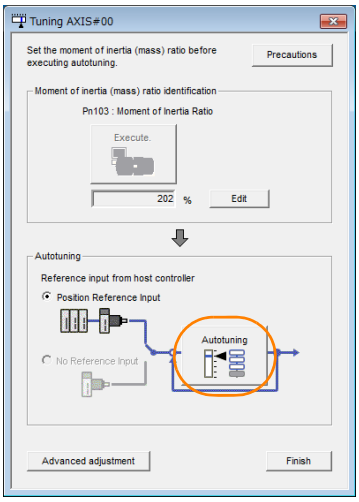

Information When the following dialog box is displayed, click the **OK** Button and then confirm that the correct moment of inertia ratio is set in Pn103 (Moment of Inertia Ratio).

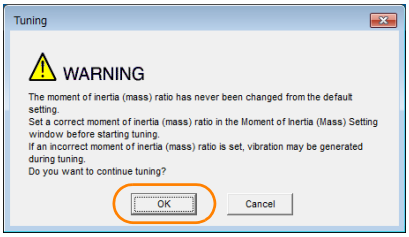

6. Set the conditions in the **Mode selection** Box and the **Mechanism selection** Box, and then click the **Next** Button.
If you select the **Start tuning using the default settings** Check Box in the **Tuning parameters** Area, the tuning parameters will be returned to the default settings before tuning is started.

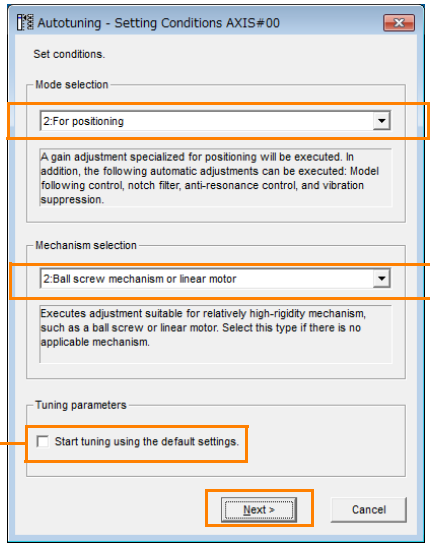

- **Mode selection** Box
  Set the mode.

Mode Selection	Description
1: Standard	Standard gain adjustment is performed. In addition to gain adjustment, notch filters and anti-resonance control are automatically adjusted.
2: For positioning	Tuning is performed for positioning applications. In addition to gain adjustment, model following control, notch filters, anti-resonance control, and vibration suppression are automatically adjusted.
3: For positioning especially to prevent overshooting	Tuning is performed for positioning applications with emphasis on eliminating overshooting. In addition to gain adjustment, notch filters, anti-resonance control, and vibration suppression are automatically adjusted.

- **Tuning parameters** Box
  Specify the parameters to use for tuning.
  If you select the **Start tuning using the default settings** Check Box, the tuning parameters will be returned to the default settings before tuning is started.

- **Mechanism selection** Box
  Select the type according to the machine element to drive.
  If there is noise or if the gain does not increase, better results may be obtained by changing the rigidity type.
  Select the type according to the following guidelines.

Mechanism Selection	Description
1: Belt mechanism	Tuning is performed for a mechanism with relatively low rigidity, e.g., a belt.
2: Ball screw mechanism or linear motor	Tuning is performed for a mechanism with relatively high rigidity, e.g., a ball screw or Linear Servomotor. Use this setting if there is no other appropriate setting.
3: Rigid model	Tuning is performed for a mechanism with high rigidity, e.g., a rigid body system.

7. Click the **Yes** Button.

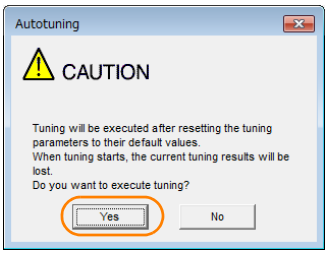

8. Input the correct moment of inertia ratio and click the **Next** Button.

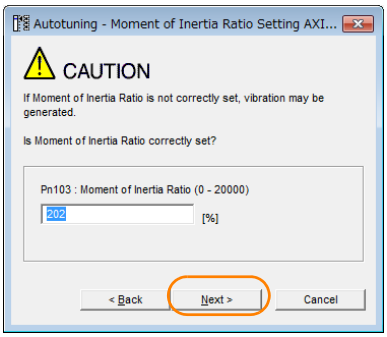

9. First confirm safety around moving parts. Then turn ON the servo, enter a reference from the host controller, and click the **Start tuning** Button.

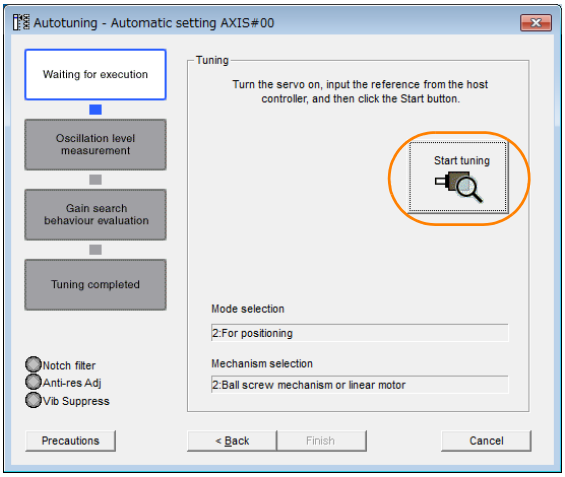

10. Click the **Yes** Button.

Tuning will be executed.
Vibration that occurs during tuning will be detected automatically and suitable settings will be made for that vibration. When the settings have been completed, the indicators for the functions that were used will light at the lower left of the dialog box.

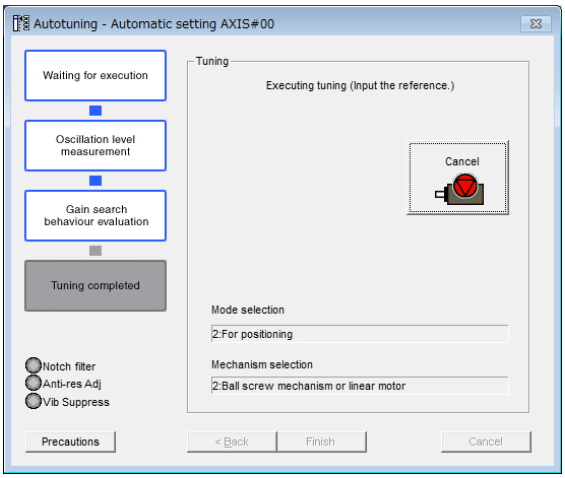

11. When tuning has been completed, click the **Finish** Button.
The results of tuning will be set in the parameters and you will return to the Tuning Dialog Box.

This concludes the procedure to perform autotuning with a host reference.

8.7.5 Troubleshooting Problems in Autotuning with a Host Reference

The following tables give the causes of and corrections for problems that may occur in autotuning with a host reference.

◆ Autotuning with a Host Reference Was Not Performed

Possible Cause	Corrective Action
Main circuit power supply is OFF.	Turn ON the main circuit power supply.
An alarm or warning occurred.	Remove the cause of the alarm or warning.
Overtraveling occurred.	Remove the cause of overtraveling.
The second gains were selected with the gain selection.	Disable automatic gain switching.
The HWBB was activated.	Release the HWBB.

◆ Troubleshooting Errors

Error	Possible Cause	Corrective Action
The gain adjustments were not successfully completed.	Machine vibration occurs or positioning completion is not stable when the Servomotor stops.	• Increase the setting of the positioning completed width (Pn522). • Change the mode from 2 to 3. • If machine vibration occurs, suppress the vibration with the anti-resonance control adjustment and the vibration suppression function.
Positioning was not completed within approximately 10 seconds after position adjustment was completed.	The positioning completed width is too narrow or proportional control is being used.	• Increase the setting of the positioning completed width (Pn522). • Turn OFF the /P-CON (Proportional Control) signal.

◆ Adjustment Results Are Not Satisfactory for Position Control

You may be able to improve the adjustment results by changing the settings of the positioning completed width (Pn522) and the electronic gear ratio (Pn20E/Pn210).

If satisfactory results are still not possible, adjust the overshoot detection level (Pn561). That may improve the adjustment results.

- Pn561 = 100% (default setting)
  This will allow tuning with overshooting that is equivalent to the positioning completed width.
- Pn561 = 0%
  This will allow tuning to be performed without overshooting within the positioning completed width, but the positioning completed width may be extended.

Pn561	Overshoot Detection Level			Speed Position Torque	
	Setting Range	Setting Unit	Default Setting	When Enabled	Classification
	0 to 100	1%	100	Immediately	Setup

8.7.6 Automatically Adjusted Function Settings

These function settings are the same as for autotuning without a host reference. Refer to the following section.

☞ *8.6.6 Automatically Adjusted Function Settings* on page 8-32

8.7.7 Related Parameters

The following parameters are automatically adjusted or used as reference when you execute autotuning with a host reference.

Do not change the settings while autotuning with a host reference is being executed.

Parameter	Name	Automatic Changes
Pn100	Speed Loop Gain	Yes
Pn101	Speed Loop Integral Time Constant	Yes
Pn102	Position Loop Gain	Yes
Pn103	Moment of Inertia Ratio	No
Pn121	Friction Compensation Gain	Yes
Pn123	Friction Compensation Coefficient	Yes
Pn124	Friction Compensation Frequency Correction	No
Pn125	Friction Compensation Gain Correction	Yes
Pn401	First Stage First Torque Reference Filter Time Constant	Yes
Pn408	Torque-Related Function Selections	Yes
Pn409	First Stage Notch Filter Frequency	Yes
Pn40A	First Stage Notch Filter Q Value	Yes
Pn40C	Second Stage Notch Filter Frequency	Yes
Pn40D	Second Stage Notch Filter Q Value	Yes
Pn140	Model Following Control-Related Selections	Yes
Pn141	Model Following Control Gain	Yes
Pn142	Model Following Control Gain Correction	Yes
Pn143	Model Following Control Bias in the Forward Direction	Yes
Pn144	Model Following Control Bias in the Reverse Direction	Yes
Pn145	Vibration Suppression 1 Frequency A	Yes
Pn146	Vibration Suppression 1 Frequency B	Yes
Pn147	Model Following Control Speed Feedforward Compensation	Yes
Pn160	Anti-Resonance Control-Related Selections	Yes
Pn161	Anti-Resonance Frequency	Yes
Pn163	Anti-Resonance Damping Gain	Yes

Yes: The parameter is automatically set.

No: The parameter is not automatically set, but the setting is read during execution.

8.8 Custom Tuning

This section describes custom tuning.

8.8.1 Outline

You can use custom tuning to manually adjust the servo during operation using a speed or position reference input from the host controller. You can use it to fine-tune adjustments that were made with autotuning.

The following items are adjusted automatically.

- Gains (e.g., speed loop gain and position loop gain)
- Filters (torque reference filter and notch filters)
- Friction compensation
- Anti-resonance control

Refer to the following section for details on the parameters that are adjusted.

☞ *8.8.7 Related Parameters* on page 8-50

There are two adjustment methods that you can use for custom tuning.

■ Tuning Mode 0 (Setting Servo Gains Giving Priority to Stability) or 1 (Setting Servo Gains Giving Priority to Good Response)

These modes allow you to set stable control conditions for multiple servo gains by manipulating only one tuning level. Automatic setting of notch filters and anti-resonance control is provided if vibration is detected. Manual anti-resonance control adjustment is also possible during custom tuning.

■ Tuning Mode 2 (Setting Servo Gains Giving Priority to Position Control Applications) or 3 (Setting Servo Gains Giving Priority to Preventing Overshooting in Position Control Applications)

Two tuning levels are manipulated to reduce positioning time even further and set multiple servo gains.
Model following control is used to reduce the positioning time. If vibration is detected, notch filters and anti-resonance control are automatically adjusted, and friction compensation is automatically set. Manual anti-resonance control adjustment and vibration suppression are also possible during custom tuning.

⚠ CAUTION

- Vibration or overshooting may occur during custom tuning. To ensure safety, make sure that you can perform an emergency stop at any time.

8.8.2 Preparations

Always check the following before you execute custom tuning.

- The test without a motor function must be disabled (Pn00C = n.□□□0).
- The tuning-less function must be disabled (Pn170 = n.□□□0).
- If speed control is used, tuning mode 0 or 1 must be set.
- The parameters must not be write prohibited.

8.8.3 Applicable Tools

The following table lists the tools that you can use to perform custom tuning.

Tool	Fn No./Function Name	Operating Procedure Reference
Panel Operator	You cannot perform custom tuning from the Panel Operator.	
Digital Operator	Fn203	Σ-7-Series Digital Operator Operating Manual (Manual No.: SIEP S800001 33)
SigmaWin+	***Tuning* – *Tuning***	*8.8.4 Operating Procedure* on page 8-43

8.8.4 Operating Procedure

Use the following procedure to perform custom tuning.

WARNING

- Before you execute custom tuning, check the information provided in the SigmaWin+ operating manual.
  Observe the following precautions.
  - Make sure that you can perform an emergency stop at any time.
    When custom tuning is started, several parameters will be overwritten with the recommended settings, which may greatly affect the response before and after execution. Make sure that you can perform an emergency stop at any time.
  - Set the moment of inertia correctly before you execute custom tuning.
    If the setting greatly differs from the actual moment of inertia, vibration may occur.
  - If you change the feedforward level, the new setting will not be used immediately. It will be used after positioning is completed.

CAUTION

- If you are using an MP3000-series Controller for phase control, set the tuning mode to 0 or 1. If 2 or 3 is selected for the tuning mode, correct phase control may not be possible.

1. Confirm that the moment of inertia ratio (Pn103) is set correctly.
2. Click the Servo Drive Button in the workspace of the Main Window of the SigmaWin+.
3. Select **Tuning** in the Menu Dialog Box.
   The Tuning Dialog Box will be displayed.
   Click the **Cancel** Button to cancel tuning.

4. Click the **Execute** Button.

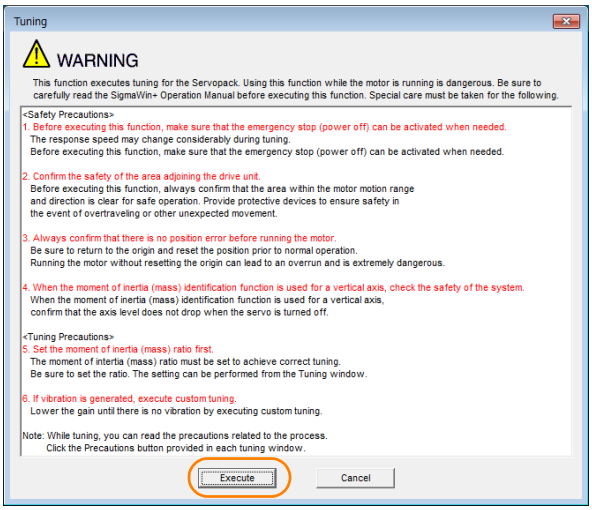

5. Click the **Advanced adjustment** Button.

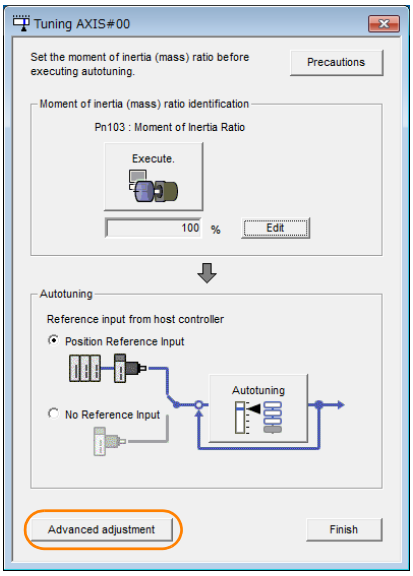

Information

When the following dialog box is displayed, click the **OK** Button and then confirm that the correct moment of inertia ratio is set in Pn103 (Moment of Inertia Ratio).

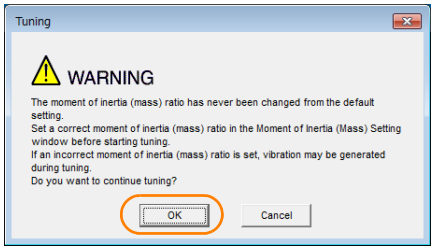

6. Click the **Custom tuning** Button.

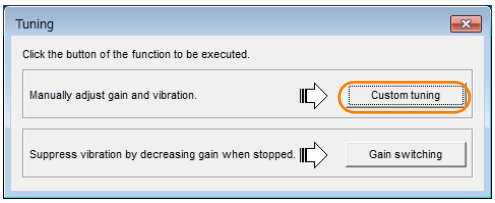

7. Set the **Tuning mode** Box and **Mechanism selection** Box, and then click the **Next** Button.

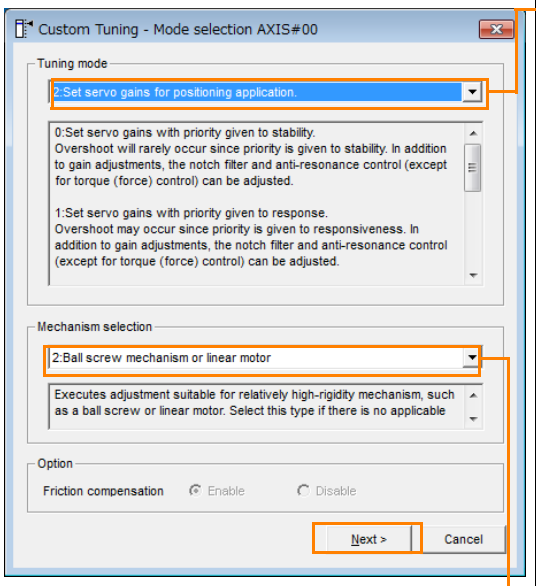

Tuning mode Box

Mode Selection	Description
0: Set servo gains with priority given to stability.	This setting gives priority to stability and preventing overshooting. In addition to gain adjustment, notch filters and anti-resonance control (except during torque control) are automatically adjusted.
1: Set servo gains with priority given to response.	Overshooting may occur because priority is given to response. In addition to gain adjustment, notch filters and anti-resonance control (except during torque control) are automatically adjusted.
2: Set servo gains for positioning application.	Tuning is performed for positioning applications. In addition to gain adjustment, notch filters, anti-resonance control, and vibration suppression are adjusted.
3: Set servo gains especially to prevent overshooting during positioning application.	Tuning is performed for positioning applications with emphasis on eliminating overshooting. In addition to gain adjustment, notch filters, anti-resonance control, and vibration suppression are adjusted.

- **Mechanism Selection** Box
  Select the type according to the machine element to drive.
  If there is noise or if the gain does not increase, better results may be obtained by changing the rigidity type. Select the type according to the following guidelines.

Mechanism Selection	Description
1: Belt mechanism	Tuning is performed for a mechanism with relatively low rigidity, e.g., a belt.
2: Ball screw mechanism or Linear motor	Tuning is performed for a mechanism with relatively high rigidity, e.g., a ball screw or Linear Servomotor. Use this setting if there is no other appropriate setting.
3: Rigid body system	Tuning is performed for a mechanism with high rigidity, e.g., a rigid body system.

Information The tuning modes that you can select depend on the SERVOPACK setting.

8. If the moment of inertia ratio is not set correctly, correct the setting and then click the **Next** Button.

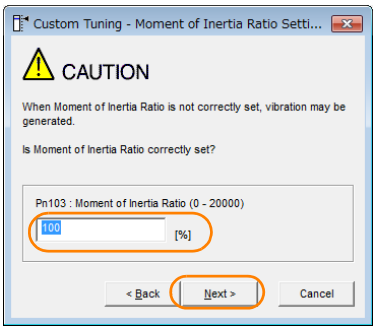

9. Turn ON the servo, enter a reference from the host controller, and then click the **Start tuning** Button.

Tuning Mode 0 or 1

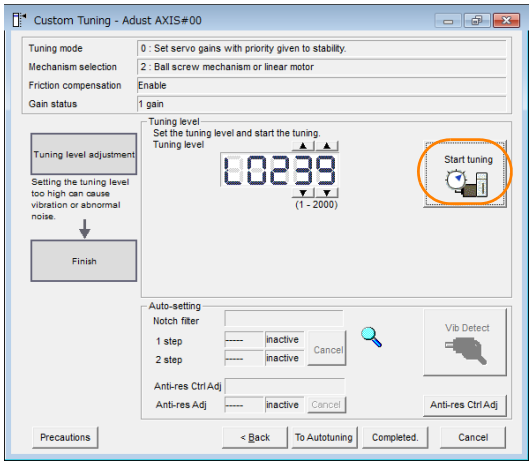

Tuning Mode 2 or 3

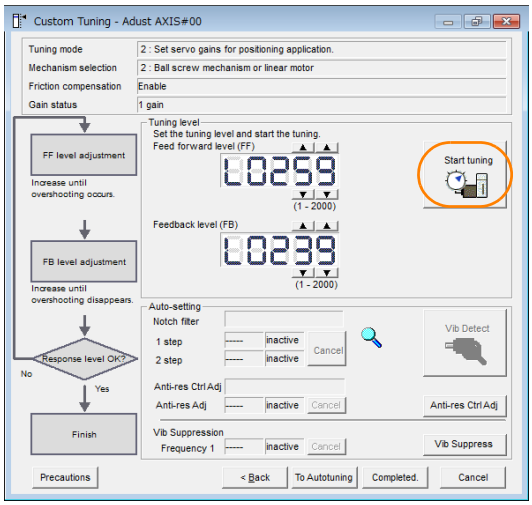

10. Use the ▲ and ▼ Buttons to change the tuning level.

Click the **Back** Button during tuning to restore the setting to its original value. The tuning level will return to the value from before when custom tuning was started.

Tuning Mode 0 or 1

Increase the tuning level until overshooting occurs.

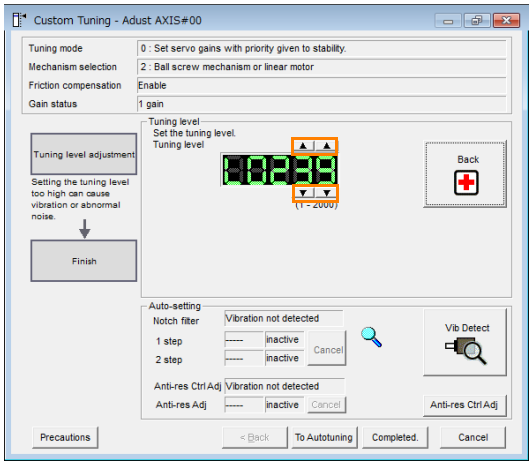

Tuning Mode 2 or 3

Increase the feedforward level until overshooting occurs and then increase the feedback level until overshooting is eliminated. Repeat these changes to make the adjustment.

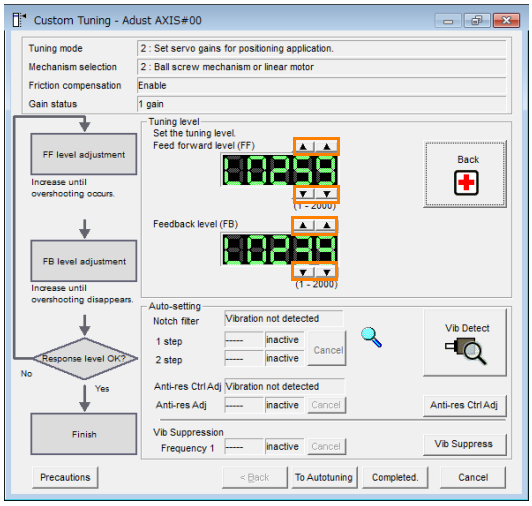

Information The new feedforward level will not be used until the positioning completed signal is output.

11. You can set the functions to suppress vibration (notch filters, automatic anti-resonance control setting, anti-resonance control adjustment, and autotuning with a host reference) as required.

Refer to the following section for details.

☞ *Vibration Suppression Functions* on page 8-48

12. When tuning has been completed, click the **Completed** Button.
The values that were changed will be saved in the SERVOPACK and you will return to the Tuning Dialog Box.

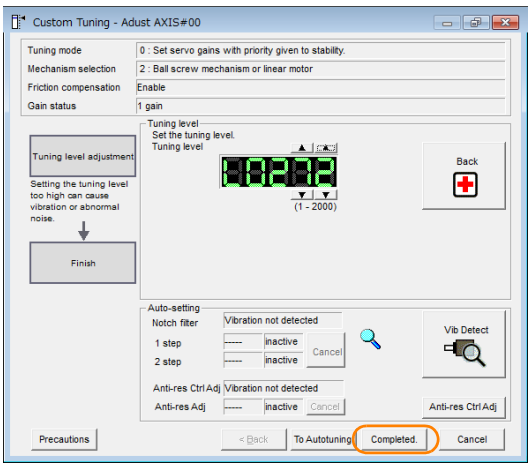

This concludes the procedure to set up custom tuning.

Vibration Suppression Functions

◆ Notch Filters and Automatic Anti-resonance Control Setting

If the vibration frequency that occurs when you increase the servo gains is at 1,000 Hz or higher, notch filters are effective to suppress vibration. If the vibration is between 100 Hz and 1,000 Hz, anti-resonance control is effective.

◆ Automatic Setting

To set vibration suppression automatically, use the parameters to enable notch filters and automatic anti-resonance control setting.
The notch filter frequency (stage 1 or 2) or anti-resonance control frequency that is effective for the vibration that was detected during tuning will be automatically set.

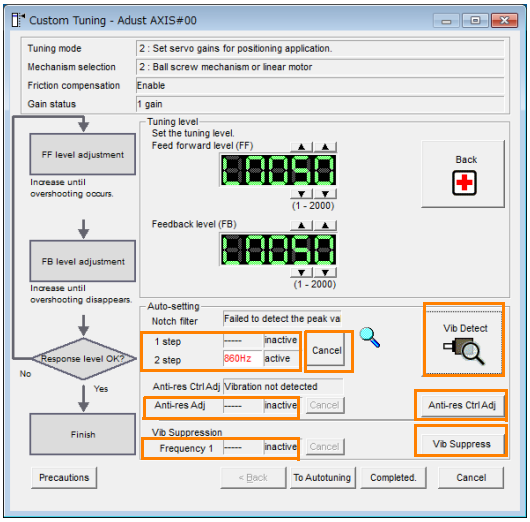

- **Auto-setting Cancel** Buttons
  The automatically set notch filter frequencies or the anti-resonance control frequencies may not always suppress vibration. Click the **Cancel** Button to reset the notch filter frequencies or the anti-resonance control frequencies to the values from just before these frequencies were set automatically.
  When they are reset, vibration detection will start again.
- **Vib Detect** Button
  While the notch filter or automatic anti-resonance control setting function is enabled, you can click the **Vib Detect** Button to manually detect vibration. When you click the **Vib Detect** Button, the SERVOPACK will detect vibration at that time, and set the notch filter frequency (stage 1 or 2) or anti-resonance control frequency that is effective for the detected vibration. You can also perform manual vibration detection even when the SERVOPACK does not detect vibration.
- **Anti-res Ctrl Adj** Button
  You can use the **Anti-res Ctrl Adj** Button to execute the anti-resonance control adjustment if fine-tuning is required. Refer to the following section.
  ☞ *8.9 Anti-Resonance Control Adjustment* on page 8-51
- **Vib Suppress** Button
  Click the **Vib Suppress** Button to suppress low and transient vibration (oscillation) of approximately 1 Hz to 100 Hz that occurs during positioning. Refer to the following section.
  ☞ *8.10 Vibration Suppression* on page 8-56

◆ Autotuning with a Host Reference

You can perform autotuning with a host reference. Refer to the following section for details.
☞ *8.7 Autotuning with a Host Reference* on page 8-35

8.8.5 Automatically Adjusted Function Settings

You cannot use vibration suppression functions at the same time. Other automatic function settings are the same as for autotuning without a host reference. Refer to the following section.

☞ *8.6.6 Automatically Adjusted Function Settings* on page 8-32

8.8.6 Tuning Example for Tuning Mode 2 or 3

Step	Measurement Display Examples	Operation
1	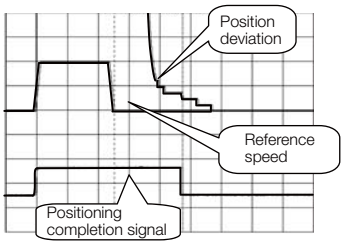	The positioning time is measured after the moment of inertia ratio (Pn103) is set correctly. Tuning is completed if the specifications are met. The tuning results are saved in the SERVOPACK.
2	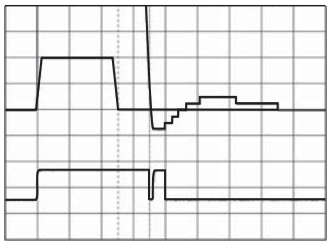	The positioning time will be reduced if the feedforward level is increased. Tuning is completed if the specifications are met. The tuning results are saved in the SERVOPACK. If overshooting occurs before the specifications are met, proceed to step 3.
3	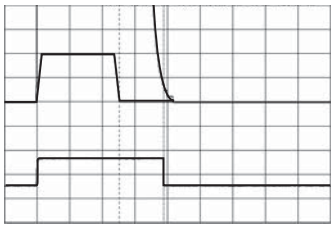	Overshooting will be reduced if the feedback level is increased. If the overshooting is eliminated, proceed to step 4.
4	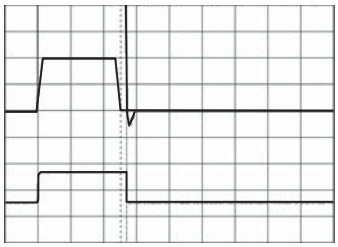	The graph shows overshooting that occurred when the feedforward level was increased even more after step 3. In this state, overshooting occurs, but the positioning settling time is shorter. Tuning is completed if the specifications are met. The tuning results are saved in the SERVOPACK. If overshooting occurs before the specifications are met, repeat steps 3 and 4. If vibration occurs before the overshooting is eliminated, the vibration is suppressed with the notch filters and anti-resonance control.
5	–	The tuning results are saved in the SERVOPACK.

8.8.7 Related Parameters

The following parameters are automatically adjusted or used as reference when you execute custom tuning.

Do not change the settings while custom tuning is being executed.

Parameter	Name	Automatic Changes
Pn100	Speed Loop Gain	Yes
Pn101	Speed Loop Integral Time Constant	Yes
Pn102	Position Loop Gain	Yes
Pn103	Moment of Inertia Ratio	No
Pn121	Friction Compensation Gain	Yes
Pn123	Friction Compensation Coefficient	Yes
Pn124	Friction Compensation Frequency Correction	No
Pn125	Friction Compensation Gain Correction	Yes
Pn401	First Stage First Torque Reference Filter Time Constant	Yes
Pn408	Torque-Related Function Selections	Yes
Pn409	First Stage Notch Filter Frequency	Yes
Pn40A	First Stage Notch Filter Q Value	Yes
Pn40C	Second Stage Notch Filter Frequency	Yes
Pn40D	Second Stage Notch Filter Q Value	Yes
Pn140	Model Following Control-Related Selections	Yes
Pn141	Model Following Control Gain	Yes
Pn142	Model Following Control Gain Correction	Yes
Pn143	Model Following Control Bias in the Forward Direction	Yes
Pn144	Model Following Control Bias in the Reverse Direction	Yes
Pn145	Vibration Suppression 1 Frequency A	No
Pn146	Vibration Suppression 1 Frequency B	No
Pn147	Model Following Control Speed Feedforward Compensation	Yes
Pn160	Anti-Resonance Control-Related Selections	Yes
Pn161	Anti-Resonance Frequency	Yes
Pn163	Anti-Resonance Damping Gain	Yes

Yes: The parameter is automatically set.

No: The parameter is not automatically set, but the setting is read during execution.

8.9 Anti-Resonance Control Adjustment

This section describes anti-resonance control.

8.9.1 Outline

Anti-resonance control increases the effectiveness of vibration suppression after custom tuning.

Anti-resonance control is effective for suppression of continuous vibration frequencies from 100 to 1,000 Hz that occur when the control gain is increased. Vibration can be eliminated by setting vibration frequencies through automatic detection or by manually setting them to adjust the damping gain. Input an operation reference and execute this anti-resonance control adjustment when there is vibration.

Anti-resonance control is automatically set by autotuning without a host reference or autotuning with a host reference. Use anti-resonance control adjustment only if fine-tuning is required or readjustment is required as a result of a failure to detect vibration.

Perform custom tuning if required to increase the response after performing anti-resonance control adjustment. If the control gain is increased, e.g., when custom tuning is performed, vibration may occur again. If that occurs, perform anti-resonance control adjustment again to fine-tune the parameters.

⚠ CAUTION

- Related parameters will be set automatically when anti-resonance control adjustment is executed. This may greatly affect the response before and after execution. Make sure that you can perform an emergency stop at any time.
- Before you execute anti-resonance control adjustment, set the correct moment of inertia ratio (Pn103). If the setting greatly differs from the actual moment of inertia ratio, normal control of the machine may not be possible, and vibration may occur.

Important

- Anti-resonance control adjustment detects vibration frequencies between 100 Hz and 1,000 Hz. If the vibration frequency is not within this range, use custom tuning with tuning mode 2 selected to automatically set a notch filter or use vibration suppression.
- Vibration reduction can be made more effective by increasing the anti-resonance damping gain (Pn163), but the vibration may become larger if the damping gain is too high. Increase the damping gain by approximately 0% to 200% in 10% increments while checking the effect on vibration. If vibration reduction is still insufficient at a gain of 200%, cancel the setting, and lower the control gain by using a different method, such as custom tuning.

8.9.2 Preparations

Always check the following before you execute anti-resonance control adjustment.

- The tuning-less function must be disabled (Pn170 = n.□□□0).
- The test without a motor function must be disabled (Pn00C = n.□□□0).
- The control method must not be set to torque control.
- The parameters must not be write prohibited.

8.9.3 Applicable Tools

The following table lists the tools that you can use to perform anti-resonance control adjustment.

Tool	Fn No./Function Name	Operating Procedure Reference
Panel Operator	You cannot execute anti-resonance control adjustment from the Panel Operator.	
Digital Operator	Fn204	Σ-7-Series Digital Operator Operating Manual (Manual No.: SIEP S800001 33)
SigmaWin+	***Tuning - Tuning***	*8.9.4 Operating Procedure* on page 8-52

8.9.4 Operating Procedure

To execute anti-resonance control adjustment, an operation reference is input, and the adjustment is executed while vibration is occurring.

The following methods can be used to execute anti-resonance control adjustment.

- To automatically detect the vibration frequency
- To manually set the vibration frequency

Use the following procedure to perform anti-resonance control.

⚠ CAUTION

- Before you execute anti-resonance control adjustment, check the information provided in the SigmaWin+ operating manual.
  Observe the following precautions.
  - Make sure that you can perform an emergency stop at any time.
    Parameters will be set automatically when anti-resonance control adjustment is executed. This may greatly affect the response before and after execution. Make sure that you can perform an emergency stop (to turn OFF the power supply) at any time.
  - Set the moment of inertia correctly before you execute anti-resonance control adjustment.
    If the setting greatly differs from the actual moment of inertia, effective vibration reduction may not be possible.
  - If you have already performed anti-resonance control adjustment and then you change the frequency, the current anti-resonance control effect may be lost. Caution is particularly required when automatically detecting the vibration frequency.
  - If effective vibration reduction is not achieved even after you execute anti-resonance control adjustment, cancel the function and lower the control gain by using a different method, such as custom tuning.
  - Perform custom tuning separately if required to increase the response after performing anti-resonance control adjustment.
    If the servo gain is increased, e.g., when custom tuning is performed, vibration may occur again. If that occurs, perform anti-resonance control adjustment again to fine-tune the parameters.

1. Perform steps 1 to 8 of the procedure for custom tuning. Refer to the following section for details.
   ☞ *8.8.4 Operating Procedure* on page 8-43

2. Click the **Anti-res Ctrl Adj** Button.
   The rest of the procedure depends on whether you know the vibration frequency.

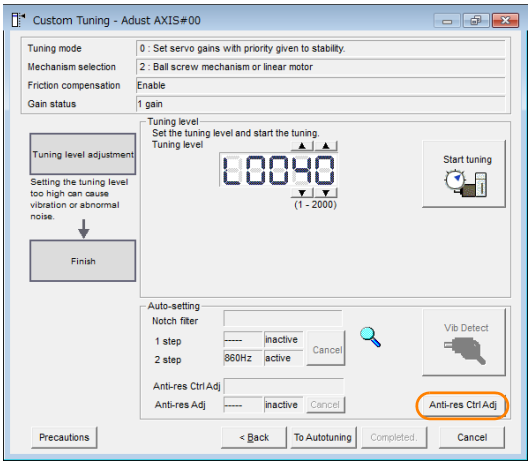

3. If you do not know the vibration frequency, click the **Auto Detect** Button. If you know the vibration frequency, click the **Manual Set** Button.

To Automatically Detect the Vibration Frequency

The frequency will be set.

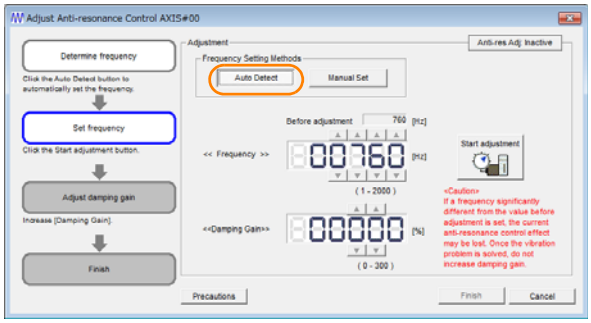

To Manually Set the Vibration Frequency

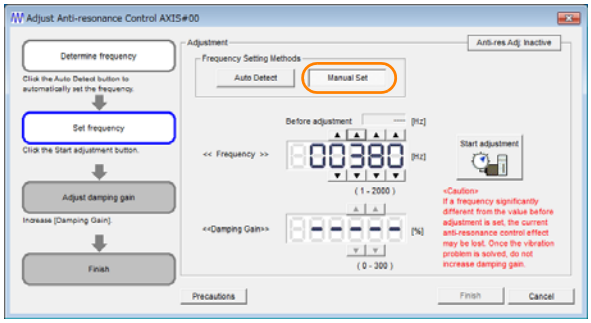

4. Click the **Start adjustment** Button.

5. Use the ▲ and ▼ Buttons in the **Adjustment** Area to change the settings.
   Click the **Reset** Button during tuning to restore the setting to its original value. The tuning level will return to the value from before when custom tuning was started.

To Automatically Detect the Vibration Frequency

Change the setting of the damping gain.

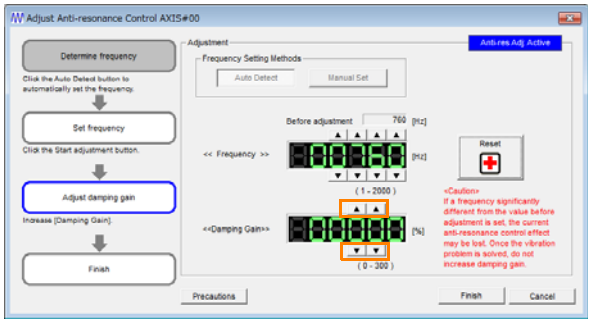

To Manually Set the Vibration Frequency

Change the settings of the frequency and damping gain.

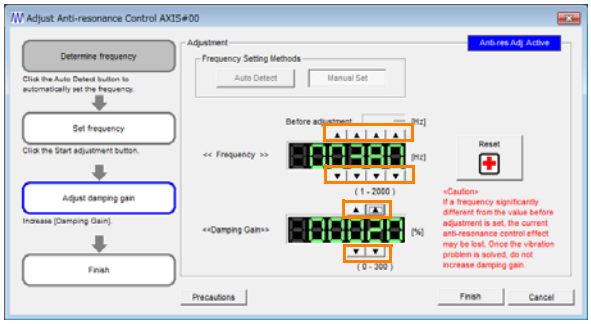

6. When the adjustment has been completed, click the **Finish** Button.
The values that were changed will be saved in the SERVOPACK and you will return to the Tuning Dialog Box.

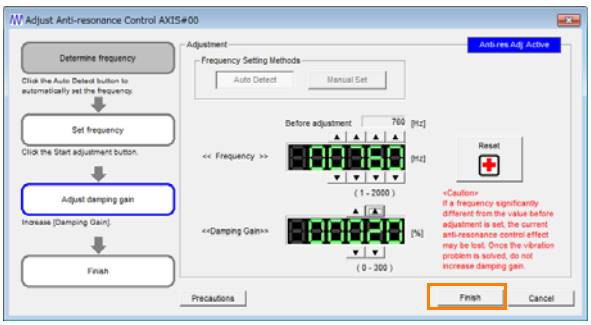

This concludes the procedure to set up anti-resonance control.

8.9.5 Related Parameters

The following parameters are automatically adjusted or used as reference when you execute anti-resonance control adjustment.

Do not change the settings while anti-resonance control adjustment is being executed.

Parameter	Name	Automatic Changes
Pn160	Anti-Resonance Control-Related Selections	Yes
Pn161	Anti-Resonance Frequency	Yes
Pn162	Anti-Resonance Gain Correction	No
Pn163	Anti-Resonance Damping Gain	Yes
Pn164	Anti-Resonance Filter Time Constant 1 Correction	No
Pn165	Anti-Resonance Filter Time Constant 2 Correction	No

Yes: The parameter is automatically set.

No: The parameter is not automatically set, but the setting is read during execution.

8.9.6 Suppressing Different Vibration Frequencies with Anti-resonance Control

When you use anti-resonance control and increase the control gain, for some mechanism, vibration can occur at a higher frequency than the frequency for which vibration was suppressed. If this occurs, you can suppress vibration for more than one frequency by adjusting Pn166 (Anti-Resonance Damping Gain 2).

Information

Guidelines for Vibration That Can Be Suppressed
Anti-resonance frequency (Pn161): fa [Hz], Another vibration frequency that occurs when the control gain is increased: fb [Hz]
- Vibration frequencies: 100 Hz to 1,000 Hz
- Range of different vibration frequencies: $1 < (fb/fa) \leq 3$ to 4

Required Parameter Settings

The following parameter settings are required to use anti-resonance control for more than one vibration frequency.

Parameter		Description	When Enabled	Classification
Pn160	n.□□□0 (default setting)	Do not use anti-resonance control.	After restart	Setup
	n.□□□1	Use anti-resonance control.		

Pn161	Anti-Resonance Frequency			Speed Position Torque	
	Setting Range	Setting Unit	Default Setting	When Enabled	Classification
	10 to 20,000	0.1 Hz	1000	Immediately	Tuning
Pn162	Anti-Resonance Gain Correction			Speed Position Torque	
	Setting Range	Setting Unit	Default Setting	When Enabled	Classification
	1 to 1,000	1%	100	Immediately	Tuning
Pn163	Anti-Resonance Damping Gain			Speed Position Torque	
	Setting Range	Setting Unit	Default Setting	When Enabled	Classification
	0 to 300	1%	0	Immediately	Tuning
Pn164	Anti-Resonance Filter Time Constant 1 Correction			Speed Position Torque	
	Setting Range	Setting Unit	Default Setting	When Enabled	Classification
	-1,000 to 1,000	0.01 ms	0	Immediately	Tuning
Pn165	Anti-Resonance Filter Time Constant 2 Correction			Speed Position Torque	
	Setting Range	Setting Unit	Default Setting	When Enabled	Classification
	-1,000 to 1,000	0.01 ms	0	Immediately	Tuning
Pn166	Anti-Resonance Damping Gain 2			Speed Position Torque	
	Setting Range	Setting Unit	Default Setting	When Enabled	Classification
	0 to 1,000	1%	0	Immediately	Tuning

Adjustment Procedure for Suppressing Different Vibration Frequencies with Anti-resonance Control

Use the following procedure to make adjustments to suppress different vibration frequencies with anti-resonance control.

Step	Operation
1	Use the gain adjustment and anti-resonance control. Refer to the following section for details. ☞ *8.9.4 Operating Procedure* on page 8-52
2	If there is vibration at a higher frequency than the vibration suppressed with anti-resonance control in step 1, adjust Pn166 (Anti-Resonance Damping Gain 2).
3	Adjust Pn166 (Anti-Resonance Damping Gain 2) while checking to see if vibration reduction is effective. To adjust Pn166 (Anti-Resonance Damping Gain 2), increase the setting by 10% at a time starting from the value that resulted in Pn163 (Anti-Resonance Damping Gain) from the adjustment in step 1.
4	If the vibration disappears, the adjustment is completed. However, if the vibration does not disappear even when you adjust Pn166 (Anti-Resonance Damping Gain 2), reduce the tuning level or feedback level until vibration does not occur.

8.10 Vibration Suppression

This section describes vibration suppression.

8.10.1 Outline

You can use vibration suppression to suppress transient vibration at a low frequency from 1 Hz to 100 Hz, which is generated mainly when the machine vibrates during positioning. This is effective for vibration frequencies for which notch filters and anti-resonance control adjustment are not effective.

Vibration suppression is automatically set by autotuning without a host reference or autotuning with a host reference. Use vibration suppression only if fine-tuning is required or readjustment is required as a result of a failure to detect vibration. To execute vibration suppression, input an operation reference and execute the function when there is vibration.

Perform custom tuning if required to increase the response after performing vibration suppression.

⚠ CAUTION

- Related parameters will be set automatically when vibration suppression is executed. This may greatly affect the response before and after execution. Make sure that you can perform an emergency stop at any time.
- Before you execute vibration suppression, set the correct moment of inertia ratio (Pn103) with autotuning without a host reference or another method. If the setting greatly differs from the actual moment of inertia ratio, normal control of the machine may not be possible, and vibration may occur.

Important

- Vibration suppression detects vibration frequencies between 1 Hz and 100 Hz.
- Frequency detection will not be performed if there is no vibration in the position deviation or if the vibration frequency is outside the range of detectable frequencies. If that is a problem, use a device such as a displacement meter or vibration sensor to measure the vibration frequency.
- If an automatically detected vibration frequency is not suppressed, the actual frequency and the detected frequency may be different. Fine-tune the detected frequency if necessary.

Items That Influence Performance

If continuous vibration occurs while the Servomotor is stopping, vibration suppression cannot be used to suppress the vibration effectively. In this case, use anti-resonance control adjustment or custom tuning.

Detection of Vibration Frequencies

Frequency detection may not be possible if vibration does not appear in the position deviation or the vibration that results from the position deviation is too small. You can adjust the detection sensitivity by changing the setting of the residual vibration detection width (Pn560), which is set as a percentage of the positioning completed width (Pn522). Perform the detection of vibration frequencies again after adjusting the setting of Pn560.

Pn560	Residual Vibration Detection Width				Position
	Setting Range	Setting Unit	Default Setting	When Enabled	Classification
	1 to 3,000	0.1%	400	Immediately	Setup

Note: As a guideline, change the setting 10% at a time. If the setting of this parameter is lowered, the detection sensitivity will be increased. Vibration may not be detected accurately if the setting is too small.

Information The vibration frequencies that are automatically detected may vary somewhat with each positioning operation. Perform positioning several times and make adjustments while checking the effect of vibration suppression.

8.10.2 Preparations

Always check the following before you execute vibration suppression.

- Position control must be used.
- The tuning-less function must be disabled (Pn170 = n.□□□0).
- The test without a motor function must be disabled (Pn00C = n.□□□0).
- The parameters must not be write prohibited.

8.10.3 Applicable Tools

The following table lists the tools that you can use to perform vibration suppression.

Tool	Fn No./Function Name	Operating Procedure Reference
Panel Operator	You cannot execute vibration suppression from the Panel Operator.	
Digital Operator	Fn205	Σ-7-Series Digital Operator Operating Manual (Manual No.: SIEP S800001 33)
SigmaWin+	***Tuning - Tuning***	*8.10.4 Operating Procedure* on page 8-57

8.10.4 Operating Procedure

Use the following procedure to perform vibration suppression.

1. Perform steps 1 to 8 of the procedure for custom tuning. Refer to the following section for details.
   8.8.4 Operating Procedure on page 8-43
2. Click the **Vib Suppress** Button.

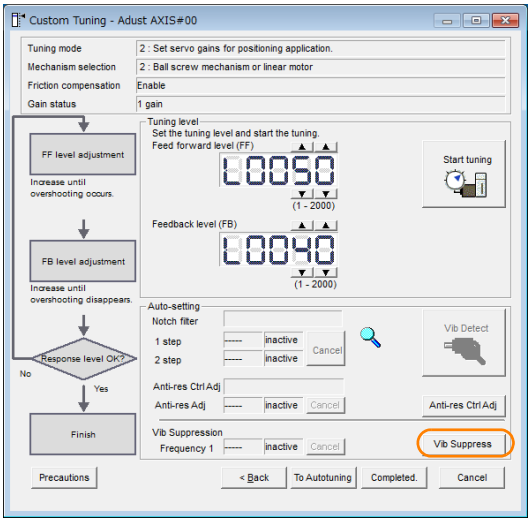

3. Click the **Import** Button or click ▲ and ▼ Button to manually adjust the set frequency.
When you click the **Import** Button, the residual vibration frequency in the Servomotor is read as the set frequency. (The frequency can be read only when the residual vibration frequency is between 1.0 and 100.0.)

> **Important**
> Frequency detection will not be performed if there is no vibration or if the vibration frequency is outside the range of detectable frequencies. If a vibration frequency is not detected, provide a means of measuring the vibration frequency.

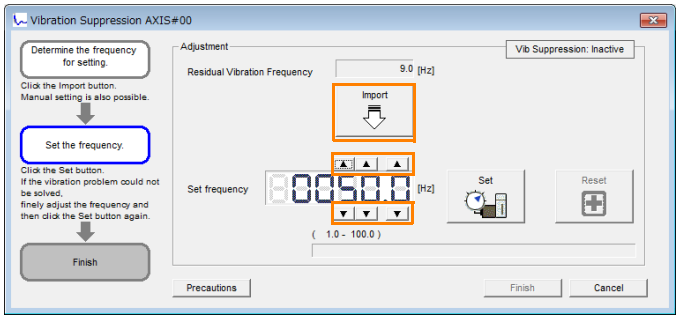

4. Click the **Set** Button.

> **Important**
> No settings related to vibration suppression are changed during operation.
> If the Servomotor does not stop within approximately 10 seconds after changing the setting, an update timeout will occur. The setting will be automatically returned to the previous value.

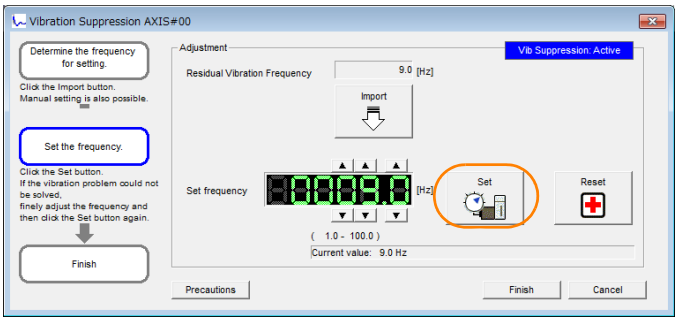

If the vibration is not eliminated, use the ▲ and ▼ Buttons for the set frequency to fine-tune the value and click the **Set** Button again.

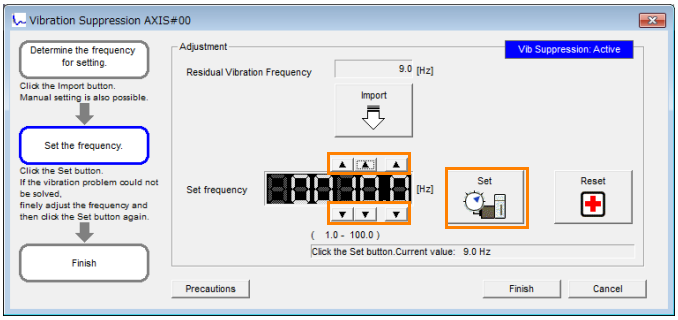

Click the **Reset** Button during adjustment to restore the setting to its original value. The status from before when adjustment was started will be restored.

5. When the vibration has been eliminated, click the **Finish** Button.
The updated value will be saved in the SERVOPACK.

> **Important**
> Vibration suppression will be enabled in step 5. The Servomotor response, however, will change when the Servomotor comes to a stop with no reference input.

This concludes the procedure to set up vibration suppression.

8.10.5 Setting Combined Functions

You can also use the feedforward function when you execute vibration suppression.

In the default settings, feedforward (Pn109), the speed feedforward input (V-REF), and the torque feedforward input (T-REF) are disabled.

To use the speed feedforward input (V-REF), the torque feedforward input (T-REF), and model following control from the host controller in the system, set Pn140 to n.1□□□ (Use model following control and speed/torque feedforward together).

Parameter		Function	When Enabled	Classification
Pn140	n.0□□□ (default setting)	Do not use model following control and speed/torque feedforward together.	Immediately	Tuning
	n.1□□□	Use model following control and speed/torque feedforward together.		

Refer to the following section for information on the torque feedforward input (T-REF) and the speed feedforward input (V-REF).

☞ ***Torque Feedforward and Speed Feedforward*** on page 8-87, ■ *Speed Feedforward* on page 8-89

> **Important**
> When model following control is used with the feedforward function, it is used to make optimum feedforward settings in the SERVOPACK. Therefore, model following control is not normally used together with either the speed feedforward input (V-REF) or torque feedforward input (T-REF) from the host controller. However, model following control can be used with the speed feedforward input (V-REF) or torque feedforward input (T-REF) if required. An unsuitable feedforward input may result in overshooting.

8.10.6 Related Parameters

The following parameters are automatically adjusted or used as reference when you execute vibration suppression.

Do not change the settings while vibration suppression is being executed.

Parameter	Name	Automatic Changes
Pn140	Model Following Control-Related Selections	Yes
Pn141	Model Following Control Gain	Yes
Pn142	Model Following Control Correction	No
Pn143	Model Following Control Bias in the Forward Direction	No
Pn144	Model Following Control Bias in the Reverse Direction	No
Pn145	Vibration Suppression 1 Frequency A	Yes
Pn146	Vibration Suppression 1 Frequency B	Yes
Pn147	Model Following Control Speed Feedforward Compensation	No
Pn14A	Vibration Suppression 2 Frequency	No
Pn14B	Vibration Suppression 2 Correction	No

Yes: The parameter is automatically set.

No: The parameter is not automatically set, but the setting is read during execution.

8.11 Speed Ripple Compensation

This section describes speed ripple compensation.

8.11.1 Outline

Speed ripple compensation reduces the amount of ripple in the motor speed due to torque ripple or cogging torque. You can enable speed ripple compensation to achieve smoother operation. To enable it, you must set up ripple compensation on the SigmaWin+.

⚠ WARNING

- **Speed ripple compensation requires operating the Servomotor and therefore presents hazards. Observe the following precautions.**
  Confirm safety around moving parts.
  This function involves automatic operation. Make sure that you can perform an emergency stop (to turn OFF the power supply) at any time.

Important

Execute speed ripple compensation only after adjusting the gains.
- Reset speed ripple compensation after you replace the Servomotor or SERVOPACK.
- Execute speed ripple compensation after jogging to a position that ensures a suitable range of motion.

8.11.2 Setting Up Speed Ripple Compensation

Restrictions

The following restrictions apply to the setup for speed ripple compensation.

◆ Systems for Which Execution Cannot Be Performed

There are no restrictions.

◆ Systems for Which Adjustments Cannot Be Made Accurately

Systems for which there is not a suitable range of motion

◆ Preparations

Always check the following before you set up speed ripple compensation.
- The main circuit power supply must be ON.
- The servo must be OFF.
- There must be no alarms or warnings.
- There must be no hard wire base block (HWBB).
- The parameters must not be write prohibited.

Applicable Tools

The following table lists the tools that you can use to set up speed ripple compensation.

Tool	Fn No./Function Name	Reference
Panel Operator	You cannot set up speed ripple compensation from the Panel Operator.	
Digital Operator	You cannot set up speed ripple compensation from the Digital Operator.	
SigmaWin+	***Diagnostic – Ripple Compensation***	☞ *Operating Procedure* on page 8-61

Operating Procedure

Use the following procedure to set up speed ripple compensation.

1. Click the Servo Drive Button in the workspace of the Main Window of the SigmaWin+.
2. Select **Ripple Compensation** in the Menu Dialog Box.
   The Ripple Compensation Dialog Box will be displayed.
3. Click the **OK** Button.

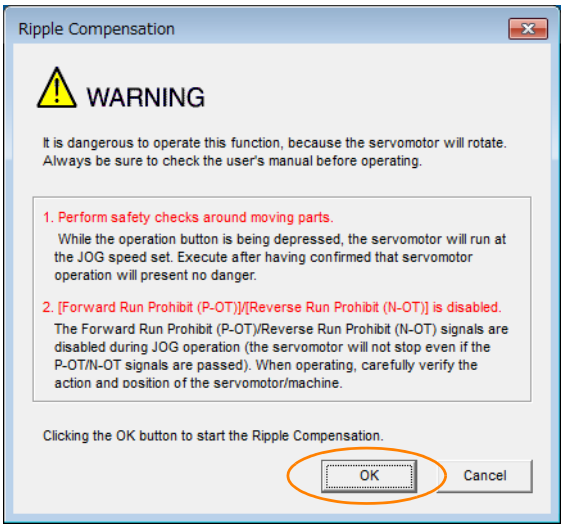

Information

1. Click the **Cancel** Button to cancel ripple compensation. The Main Window will return.
2. If write protection is set, the following dialog box will be displayed.

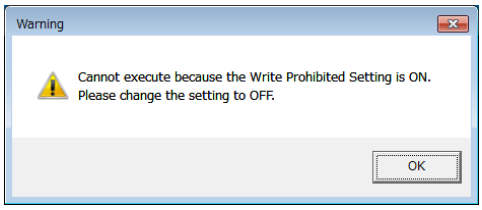

Click the **OK** Button to cancel write prohibition.

4. Click the **Edit** Button.

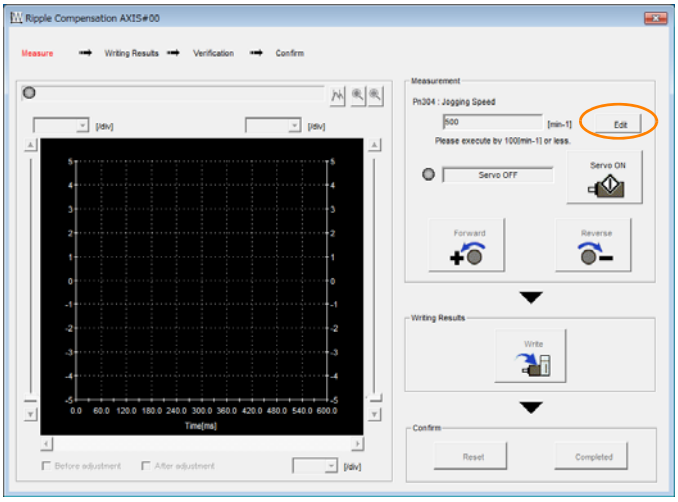

5. Enter the jogging speed in the **Input Value** Box and click the **OK** Button.

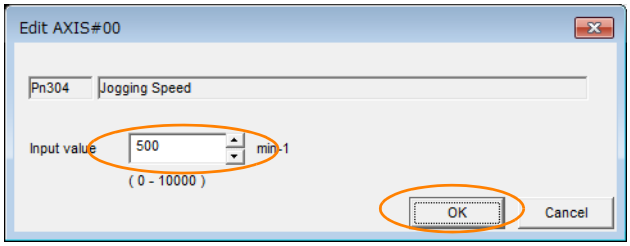

6. Click the **Servo ON** Button.

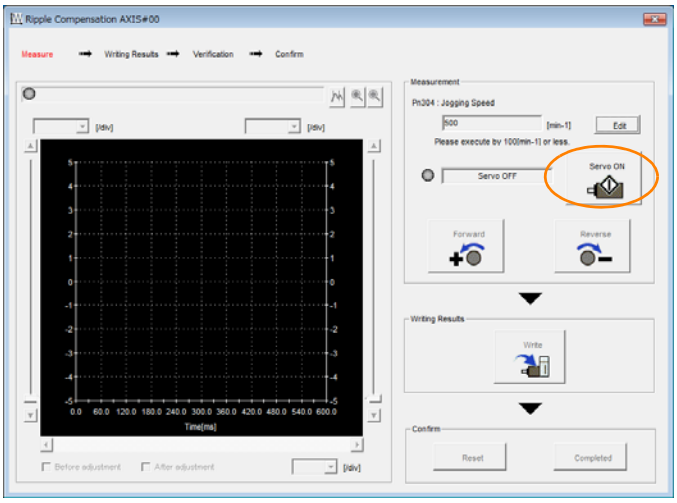

7. Click the **Forward** Button or the **Reverse** Button.
Measurement operation is started.
The Servomotor shaft will rotate at the preset jogging speed while you hold down the **Forward** or **Reverse** Button and the speed ripple will be measured.
The feedback speed and torque reference graph will be displayed in the Ripple Compensation Dialog Box during jogging.

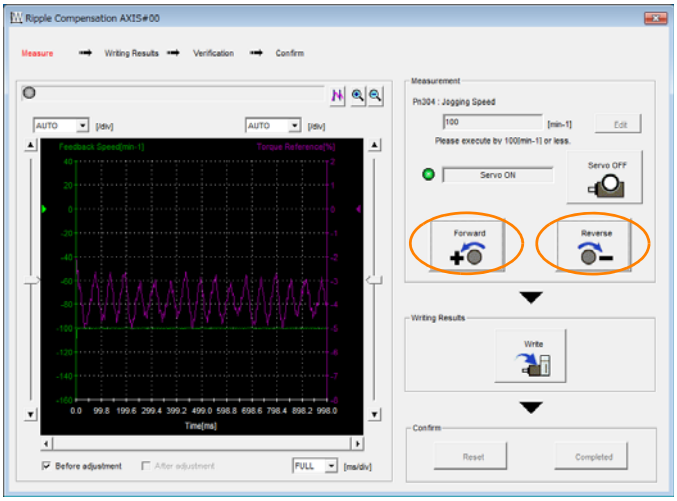

Important

If the measurement time (i.e., the jogging time) for the speed ripple is too short, speed ripple measurement will not be completed. The following dialog box will be displayed if speed ripple measurement was not completed.
Click the **OK** Button and repeat the measurement.

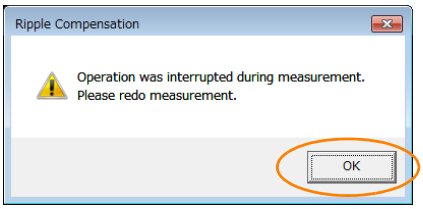

8. After speed ripple measurement has been completed, click the **Write** Button.
The ripple compensation value will be written to the SERVOPACK.

9. After writing has been completed, click the **OK** Button.

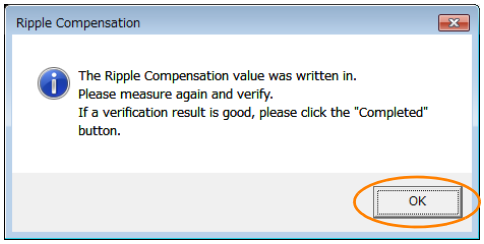

10. Click the **Forward** Button or the **Reverse** Button.
Verification operation is started.
The Servomotor shaft will rotate at the preset jogging speed while you hold down the **Forward** or **Reverse** Button.
The waveform with speed ripple compensation applied to it will be displayed.

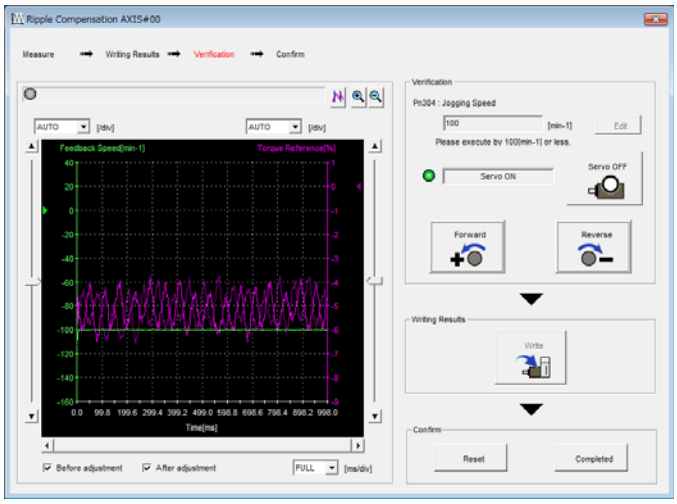

11. If the verification results are OK, click the **Completed** Button.

Information To discard the setup results, click the **Reset** Button.

This concludes the setup for speed ripple compensation.

8.11.3 Setting Parameters

The function is enabled when you perform the operating procedure on *Operating Procedure* on page 8-61. To cancel speed ripple compensation, use Pn423 = n.□□□0 (Disable speed ripple compensation) to disable it.

Parameter		Description	When Enabled	Classification
Pn423	n.□□□0 (default setting)	Disable speed ripple compensation.	Immediately	Setup
	n.□□□1	Enable speed ripple compensation.		

If you enable speed ripple compensation, a compensation reference will be applied to reduce ripple even when stopped at a 0 speed reference. In speed control mode, this may result in the Servomotor moving slightly. To prevent this, set Pn423 = n.□X□□ (Speed Ripple Compensation Enable Condition Selection) and Pn427 or Pn49F (Speed Ripple Compensation Enable Speed).

Parameter		Description	When Enabled	Classification
Pn423	n.□0□□ (default setting)	Speed reference	After restart	Setup
	n.□1□□	Motor Speed		

• For Rotary Servomotors

Pn427	Speed Ripple Compensation Enable Speed			Speed Position Torque	
	Setting Range	Setting Unit	Default Setting	When Enabled	Classification
	0 to 10,000	1 min^{-1}	0	Immediately	Tuning

• For Linear Servomotors

Pn49F	Speed Ripple Compensation Enable Speed			Speed Position Torque	
	Setting Range	Setting Unit	Default Setting	When Enabled	Classification
	0 to 10,000	1 mm/s	0	Immediately	Tuning

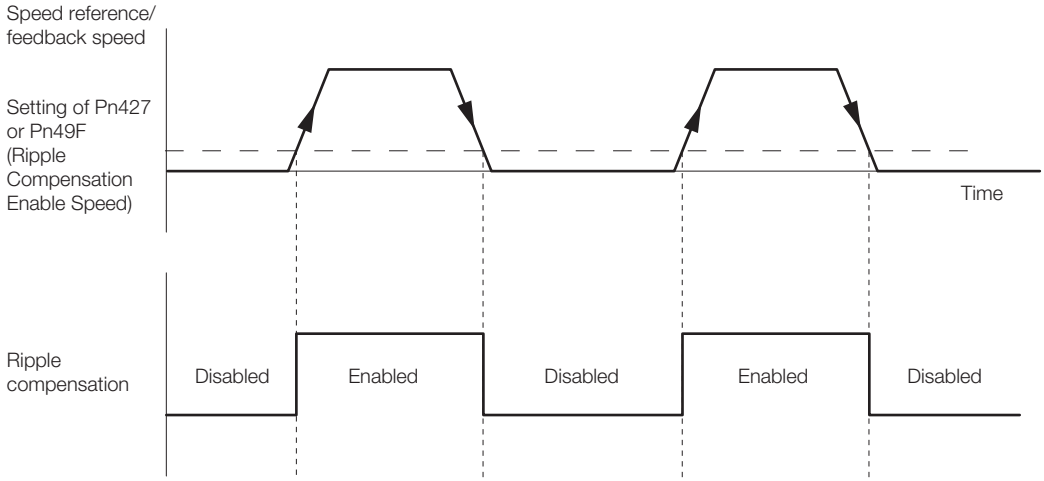

Speed Ripple Compensation Warnings

The speed ripple compensation value is specific to each Servomotor. If you replace the Servomotor while speed ripple compensation is enabled, an A.942 warning (Speed Ripple Compensation Information Disagreement) will occur to warn you.
You can use any of the following methods to clear A.942.

- Reset the speed ripple compensation value on the SigmaWin+.
- Disable speed ripple compensation (Pn423 = n.□□□0).
- Disable detection of A.942 (Pn423 = n.□□1□).

Parameter		Description	When Enabled	Classification
Pn423	n.□□0□ (default setting)	Detect A.942 alarms.	After restart	Setup
	n.□□1□	Do not detect A.942 alarms.		

8.12 Additional Adjustment Functions

This section describes the functions that you can use to make adjustments after you perform autotuning without a host reference, autotuning with a host reference, and custom tuning.

Function	Applicable Control Methods	Reference
Gain Switching	Position control, speed control, or torque control*	page 8-66
Friction Compensation	Position control or speed control	page 8-70
Current Control Mode Selection	Position control, speed control, or torque control	page 8-73
Current Gain Level Setting	Position control or speed control	page 8-73
Speed Detection Method Selection	Position control, speed control, or torque control	page 8-74
Proportional Control	Position control or speed control	page 8-74

* Automatic gain switching is enabled only for position control.

8.12.1 Gain Switching

Two gain switching functions are available, manual selection and automatic switching. The manual switching function uses an external input signal to select the gains, and the automatic switching function changes the gains automatically.
You can use gain switching to shorten the positioning time by increasing the gains during positioning and suppressing vibration by decreasing the gains while stopping.

Parameter		Function	When Enabled	Classification
Pn139	n.□□□0 (default setting)	Use manual gain switching.	Immediately	Tuning
	n.□□□2	Use automatic gain switching pattern 1.		

Note: Pn139 = n.□□□1 is a reserved parameter. Do not change.

Refer to the following section for gain switching combinations.

☞ *Gain Switching Combinations* on page 8-66

Refer to the following sections for information on manual and automatic gain switching.

☞ *Manual Gain Switching* on page 8-67 and *Automatic Gain Switching* on page 8-67

Gain Switching Combinations

Selected Gains	Speed Loop Gain	Speed Loop Integral Time Constant	Position Loop Gain	Torque Reference Filter	Model Following Control Gain	Model Following Control Correction	Friction Compensation Gain
Gain Settings 1	Speed Loop Gain (Pn100)	Speed Loop Integral Time Constant (Pn101)	Position Loop Gain (Pn102)	First Stage First Torque Reference Filter Time Constant (Pn401)	Model Following Control Gain* (Pn141)	Model Following Control Correction* (Pn142)	Friction Compensation Gain (Pn121)
Gain Settings 2	Second Speed Loop Gain (Pn104)	Second Speed Loop Integral Time Constant (Pn105)	Second Position Loop Gain (Pn106)	First Stage Second Torque Reference Filter Time Constant (Pn412)	Second Model Following Control Gain* (Pn148)	Second Model Following Control Gain Correction* (Pn149)	Second Friction Compensation Gain (Pn122)

* Gain switching for the model following control gain and the model following control gain correction is applicable only to manual gain switching.
To enable gain switching with these parameters, a gain switching input signal must be used and the following conditions must be met. If the conditions are not met, these parameters will not be changed even if the other parameters in the above table are changed.
- There must be no reference.
- The motor must be stopped.

Manual Gain Switching

With manual gain switching, you use the /G-SEL (Gain Selection) signal to change between gain settings 1 and gain settings 2.

Type	Signal	Connector Pin No.	Setting	Meaning
Input	/G-SEL	Must be allocated.	OFF	Changes the gain settings to gain settings 1.
			ON	Changes the gain settings to gain settings 2.

Automatic Gain Switching

Automatic gain switching is enabled only for position control. The switching conditions are specified by using the following settings.

Parameter		Switching Condition	Selected Gains	Switching Waiting Time	Switching Time
Pn139	n.□□□2	Condition A satisfied	Gain settings 1 to gain settings 2	Gain Switching Waiting Time 1 Pn135	Gain Switching Time 1 Pn131
		Condition A not satisfied	Gain settings 2 to gain settings 1	Gain Switching Waiting Time 2 Pn136	Gain Switching Time 2 Pn132

Select one of the following settings for switching condition A.

Parameter		Position Control Gain Switching Condition A	For Control Methods Other Than Position Control (No Switching)	When Enabled	Classification
Pn139	n.□□0□ (default setting)	/COIN (Positioning Completion) signal ON	Gain settings 1 used.	Immediately	Tuning
	n.□□1□	/COIN (Positioning Completion) signal OFF	Gain settings 2 used.		
	n.□□2□	/NEAR (Near) signal ON	Gain settings 1 used.		
	n.□□3□	/NEAR (Near) signal OFF	Gain settings 2 used.		
	n.□□4□	Position reference filter output is 0 and reference pulse input is OFF.	Gain settings 1 used.		
	n.□□5□	Position reference pulse input is ON.	Gain settings 2 used.		

Automatic Switching Pattern 1 (Pn139 = n.□□□2)

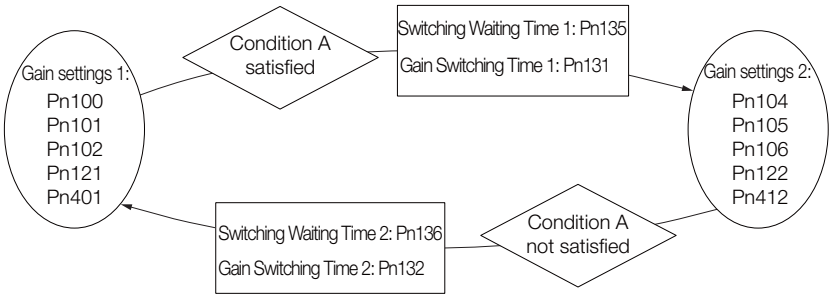

◆ Relationship between the Waiting Times and Switching Times for Gain Switching

In this example, an ON /COIN (Positioning Completion) signal is set as condition A for automatic gain switching. The position loop gain is changed from the value in Pn102 (Position Loop Gain) to the value in Pn106 (Second Position Loop Gain). When the /COIN signal turns ON, the switching operation begins after the waiting time (Pn135). The switching operation changes the position loop gain linearly from the gain set in Pn102 to the gain set in Pn106 over the switching time (Pn131).

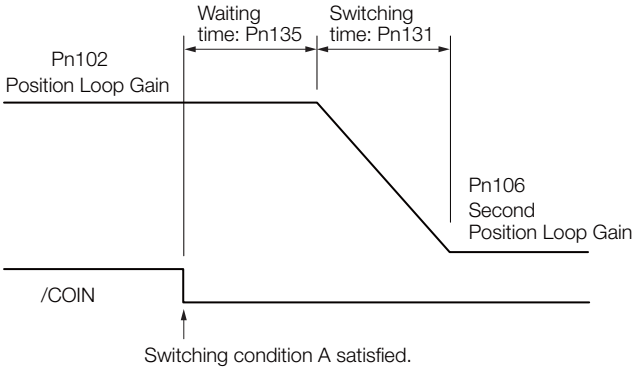

Information You can use gain switching for either PI control or I-P control (Pn10B = n.□□0□ or □□1□).

Related Parameters

Pn100	Speed Loop Gain			Speed Position	
	Setting Range	Setting Unit	Default Setting	When Enabled	Classification
	10 to 20,000	0.1 Hz	400	Immediately	Tuning
Pn101	Speed Loop Integral Time Constant			Speed Position	
	Setting Range	Setting Unit	Default Setting	When Enabled	Classification
	15 to 51,200	0.01 ms	2,000	Immediately	Tuning
Pn102	Position Loop Gain			Position	
	Setting Range	Setting Unit	Default Setting	When Enabled	Classification
	10 to 20,000	0.1/s	400	Immediately	Tuning
Pn401	First Stage First Torque Reference Filter Time Constant			Speed Position Torque	
	Setting Range	Setting Unit	Default Setting	When Enabled	Classification
	0 to 65,535	0.01 ms	100	Immediately	Tuning
Pn141	Model Following Control Gain			Position	
	Setting Range	Setting Unit	Default Setting	When Enabled	Classification
	10 to 20,000	0.1/s	500	Immediately	Tuning
Pn142	Model Following Control Gain Correction			Position	
	Setting Range	Setting Unit	Default Setting	When Enabled	Classification
	500 to 2,000	0.1%	1,000	Immediately	Tuning
Pn121	Friction Compensation Gain			Speed Position	
	Setting Range	Setting Unit	Default Setting	When Enabled	Classification
	10 to 1,000	1%	100	Immediately	Tuning
Pn104	Second Speed Loop Gain			Speed Position	
	Setting Range	Setting Unit	Default Setting	When Enabled	Classification
	10 to 20,000	0.1 Hz	400	Immediately	Tuning
Pn105	Second Speed Loop Integral Time Constant			Speed Position	
	Setting Range	Setting Unit	Default Setting	When Enabled	Classification
	15 to 51,200	0.01 ms	2,000	Immediately	Tuning

Continued on next page.

Continued from previous page.

Pn106	Second Position Loop Gain			Position	
	Setting Range	Setting Unit	Default Setting	When Enabled	Classification
	10 to 20,000	0.1/s	400	Immediately	Tuning
Pn412	First Stage Second Torque Reference Filter Time Constant			Speed Position Torque	
	Setting Range	Setting Unit	Default Setting	When Enabled	Classification
	0 to 65,535	0.01 ms	100	Immediately	Tuning
Pn148	Second Model Following Control Gain			Position	
	Setting Range	Setting Unit	Default Setting	When Enabled	Classification
	10 to 20,000	0.1/s	500	Immediately	Tuning
Pn149	Second Model Following Control Gain Correction			Position	
	Setting Range	Setting Unit	Default Setting	When Enabled	Classification
	500 to 2,000	0.1%	1,000	Immediately	Tuning
Pn122	Second Friction Compensation Gain			Speed Position	
	Setting Range	Setting Unit	Default Setting	When Enabled	Classification
	10 to 1,000	1%	100	Immediately	Tuning

Parameters Related to Automatic Gain Switching

Pn131	Gain Switching Time 1			Position	
	Setting Range	Setting Unit	Default Setting	When Enabled	Classification
	0 to 65,535	1 ms	0	Immediately	Tuning
Pn132	Gain Switching Time 2			Position	
	Setting Range	Setting Unit	Default Setting	When Enabled	Classification
	0 to 65,535	1 ms	0	Immediately	Tuning
Pn135	Gain Switching Waiting Time 1			Position	
	Setting Range	Setting Unit	Default Setting	When Enabled	Classification
	0 to 65,535	1 ms	0	Immediately	Tuning
Pn136	Gain Switching Waiting Time 2			Position	
	Setting Range	Setting Unit	Default Setting	When Enabled	Classification
	0 to 65,535	1 ms	0	Immediately	Tuning

Related Monitoring

- SigmaWin+
  You can monitor gain switching with the status monitor or with tracing.
- Analog Monitors

Parameter	Analog Monitor	Monitor Name	Output Value	Description
Pn006 Pn007	n.□□0B	Active Gain Monitor	1 V	Gain settings 1 are enabled.
			2 V	Gain settings 2 are enabled.

8.12.2 Friction Compensation

Friction compensation is used to compensate for viscous friction fluctuations and regular load fluctuations.

You can automatically adjust friction compensation with autotuning without a host reference, autotuning with a host reference, or custom tuning, or you can manually adjust it with the following procedure.

Required Parameter Settings

The following parameter settings are required to use friction compensation.

Parameter		Function	When Enabled	Classification
Pn408	n.0□□□ (default setting)	Disable friction compensation.	Immediately	Setup
	n.1□□□	Enable friction compensation.		

Pn121	Friction Compensation Gain			Speed Position	
	Setting Range	Setting Unit	Default Setting	When Enabled	Classification
	10 to 1,000	1%	100	Immediately	Tuning
Pn122	Second Friction Compensation Gain			Speed Position	
	Setting Range	Setting Unit	Default Setting	When Enabled	Classification
	10 to 1,000	1%	100	Immediately	Tuning
Pn123	Friction Compensation Coefficient			Speed Position	
	Setting Range	Setting Unit	Default Setting	When Enabled	Classification
	0 to 100	1%	0	Immediately	Tuning
Pn124	Friction Compensation Frequency Correction			Speed Position	
	Setting Range	Setting Unit	Default Setting	When Enabled	Classification
	-10,000 to 10,000	0.1 Hz	0	Immediately	Tuning
Pn125	Friction Compensation Gain Correction			Speed Position	
	Setting Range	Setting Unit	Default Setting	When Enabled	Classification
	1 to 1,000	1%	100	Immediately	Tuning

Operating Procedure for Friction Compensation

Use the following procedure to perform friction compensation.

⚠ CAUTION

- Before you execute friction compensation, set the moment of inertia ratio (Pn103) as accurately as possible. If the setting greatly differs from the actual moment of inertia, vibration may occur.

Step	Operation
1	Set the following parameters related to friction compensation to their default settings. Friction compensation gain (Pn121): 100 Second friction compensation gain (Pn122): 100 Friction compensation coefficient (Pn123): 0 Friction compensation frequency correction (Pn124): 0 Friction compensation gain correction (Pn125): 100 Note: Always use the default settings for the friction compensation frequency correction (Pn124) and friction compensation gain correction (Pn125).
2	Gradually increase the friction compensation coefficient (Pn123) to check the effect of friction compensation. Note: Usually, set the friction compensation coefficient (Pn123) to 95% or less. If the effect is insufficient, increase the friction compensation gain (Pn121) by 10% increments until vibration stops. Effect of Adjusted Parameters Pn121: Friction Compensation Gain and Pn122: Second Friction Compensation Gain These parameters set the response to external disturbances. The higher the setting is, the better the response will be. If the machine has a resonance frequency, however, vibration may occur if the setting is too high. Pn123: Friction Compensation Coefficient This parameter sets the effect of friction compensation. The higher the setting is, the more effective friction compensation will be. If the setting is too high, however, vibration will occur more easily. Usually, set the value to 95% or less.
3	Effect of Adjustments The following graphs show the response with and without adjustment. 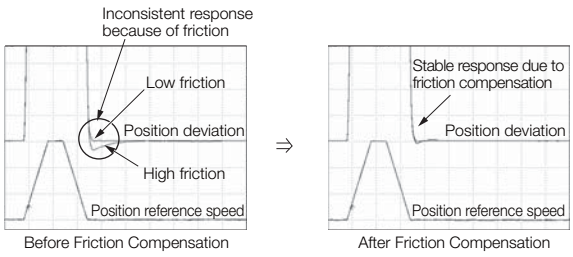 Before Friction Compensation After Friction Compensation

8.12.3 Gravity Compensation

When the Servomotor is used with a vertical axis, gravity compensation prevents the moving part from falling due to the machine's own weight when the brake is released.

SERVOPACKs with software version 0023 or higher support gravity compensation.

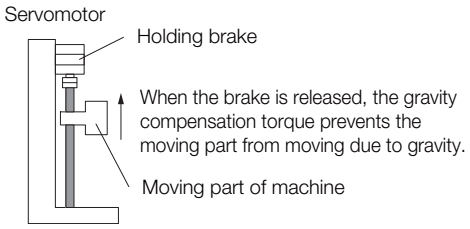

A timing chart for when the moving part is raised then lowered is provided below.
Refer to the following section for details on brake operation timing.
☞ *5.13.1 **Brake Operating Sequence*** on page 5-36

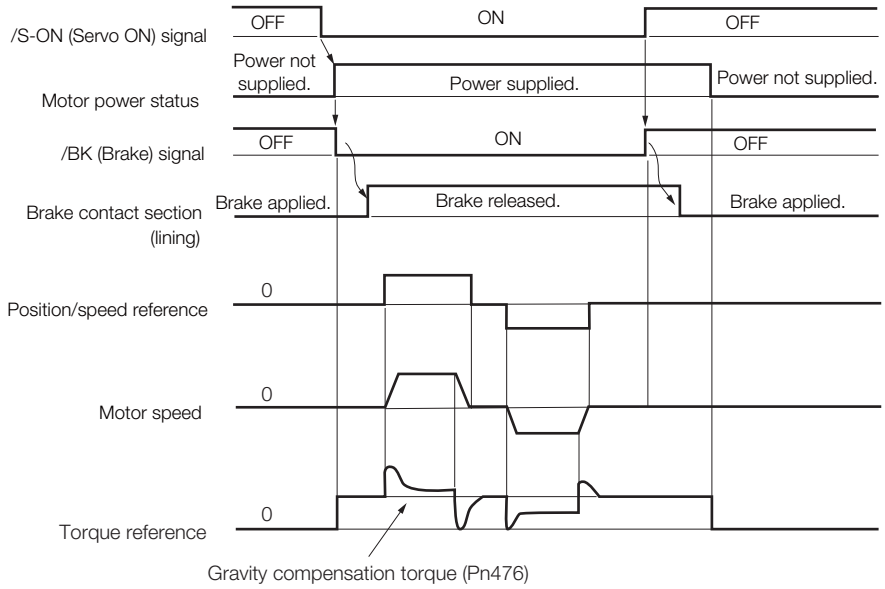

Required Parameter Settings

The following parameter settings are required to use gravity compensation.

Parameter		Description	When Enabled	Classification
Pn475	n.□□□0 (default setting)	Disable gravity compensation.	After restart	Setup
	n.□□□1	Enable gravity compensation.		

Pn476	Gravity Compensation Torque			Speed Position Torque	
	Setting Range	Setting Unit	Default Setting	When Enabled	Classification
	-1,000 to 1,000	0.1%	0	Immediately	Tuning

Operating Procedure for Gravity Compensation

Use the following procedure to perform gravity compensation.

1. Set Pn475 to n.□□□1 (Enable gravity compensation).
2. To enable changes to the settings, turn the power supply to the SERVOPACK OFF and ON again.
3. Use SigmaWin+ or an analog monitor to find the torque reference value when the motor is stopped with the servo ON.
4. Set the torque reference value found in step 3 in Pn476 (Gravity Compensation Torque).
5. Turn the servo ON and OFF a few times and fine-tune Pn476 so that the moving part of the machine does not fall.

8.12.4 Current Control Mode Selection

Current control mode selection reduces high-frequency noise while the Servomotor is being stopped.
The setting depends on the capacity of the SERVOPACK.
To use current control mode selection, use current control mode 2 (set Pn009 to n.□□1□ or n.□□2□).

- SERVOPACK Models SGD7S-R70A, -R90A, -1R6A, -2R8A, -3R8A, -5R5A, and -7R6A

Parameter		Meaning	When Enabled	Classification
Pn009	n. □□0□	Use current control mode 1.	After restart	Tuning
	n. □□1□ (default setting)			
	n. □□2□	Use current control mode 2 (low noise).		

- SERVOPACK Models SGD7S-120A, -180A, -200A, -330A, -470A, -550A, -590A, and -780A

Parameter		Meaning	When Enabled	Classification
Pn009	n. □□0□	Use current control mode 1.	After restart	Tuning
	n. □□1□ (default setting)	Use current control mode 2 (low noise).		
	n. □□2□			

Important

If current control mode 2 is selected, the load ratio may increase while the Servomotor is being stopped.

8.12.5 Current Gain Level Setting

You can set the current gain level to reduce noise by adjusting the parameter for current control inside the SERVOPACK according to the speed loop gain (Pn100). The noise level can be reduced by decreasing the current gain level (Pn13D) from its default setting of 2,000% (disabled). However, if the setting is decreased, the level of noise will be lowered, but the response characteristic of the SERVOPACK will also be reduced. Adjust the current gain level within the range that maintains the SERVOPACK response characteristic. This function is always disabled during torque control (Pn000 = n.□□2□).

Pn13D	Current Gain Level			Speed Position	
	Setting Range	Setting Unit	Default Setting	When Enabled	Classification
	100 to 2,000	1%	2,000	Immediately	Tuning

Important

If the current gain level is changed, the response characteristic of the speed loop will also change. Servo tuning must therefore be performed again.

8.12.6 Speed Detection Method Selection

You can use the speed detection method selection to ensure smooth Servomotor speed changes during operation. To ensure smooth motor speed changes during operation, set Pn009 to n.□1□□ (Use speed detection 2).

With a Linear Servomotor, you can reduce the noise level of the running motor when the linear encoder scale pitch is large.

Parameter		Meaning	When Enabled	Classification
Pn009	n. □0□□ (default setting)	Use speed detection 1.	After restart	Tuning
	n. □1□□	Use speed detection 2.		

Important

If the speed detection method is changed, the response characteristic of the speed loop will also change. Servo tuning must therefore be performed again.

8.12.7 Speed Feedback Filter

You can set a first order lag filter for the speed feedback in the speed loop. This ensures smooth changes in the feedback speed to reduce vibration. If a large value is set, it will increase the delay and make response slower.

Pn308	Speed Feedback Filter Time Constant			Speed Position	
	Setting Range	Setting Unit	Default Setting	When Enabled	Classification
	0 to 65,535 (0.00 ms to 655.35 ms)	0.01 ms	0 (0.00 ms)	Immediately	Setup

8.12.8 Proportional Control (P Control)

You can input the /P-CON (Proportional Control) signal from the host controller to select P control.

The speed control section uses proportional-integral control (PI control) if the reference remains at zero during speed control. The integral effect may cause the Servomotor to move. To prevent that, you can change from PI control to P control.

P control is set using Pn000 = n.□□X□ and the /P-CON signal.

However, if Pn000 is set to n.□□A□ (Switching between speed control with analog references and speed control with zero clamping), a position loop will be formed. Therefore, there is no need to use this function. P control is used while the /P-CON signal is ON.

/P-CON (Proportional Control) Signal

The /P-CON signal is used to switch between P control and PI control.

Type	Signal	Connector Pin No.	Setting	Meaning
Input	/P-CON	CN1-41 (default setting)	ON (closed)	Changes to P control
			OFF (open)	Changes to PI control

Example When Using the Default Input Signal Allocations

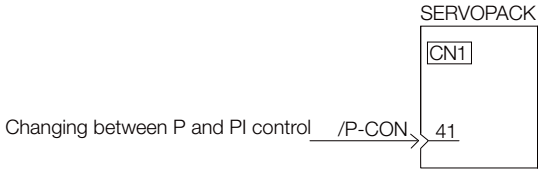

Note:This example uses the default input signal allocations.

Control Methods and P Control Input Signals

Changing to P control is enabled when the control method is set to speed control or position control.

Parameter	Control Method Selection	Description	Changing to P Control
Pn000	n.□□0□ (default setting)	Speed control with analog references	You can change to P control with the default setting (CN1-41 = /P-CON). You can also allocate the /P-CON signal to another connector pin.
	n.□□1□	Position control with pulse train references	
	n.□□2□	Torque control with analog references	You cannot change to P control.
	n.□□3□	Internal set speed control with contact commands	You must allocate the /P-CON signal to CN1-40 to CN1-46.
	n.□□4□	Switching between internal set speed control with contact commands and speed control with analog references	
	n.□□5□	Switching between internal set speed control with contact commands and position control with pulse train references	
	n.□□6□	Switching between internal set speed control with contact commands and torque control with analog references	
	n.□□7□	Switching between position control with pulse train references and speed control with analog references	
	n.□□8□	Switching between position control with pulse train references and torque control with analog references	
	n.□□9□	Switching between torque control with analog references and speed control with analog references	
	n.□□A□	Switching between speed control with analog references and speed control with zero clamping	
	n.□□B□	Switching between position control with pulse train references and position control with reference pulse inhibition	

Note: Refer to the following section for information on changing the control method.
☞ *6.10 Selecting Combined Control Methods* on page 6-59

8.13 Manual Tuning

This section describes manual tuning.

8.13.1 Tuning the Servo Gains

Servo Gains

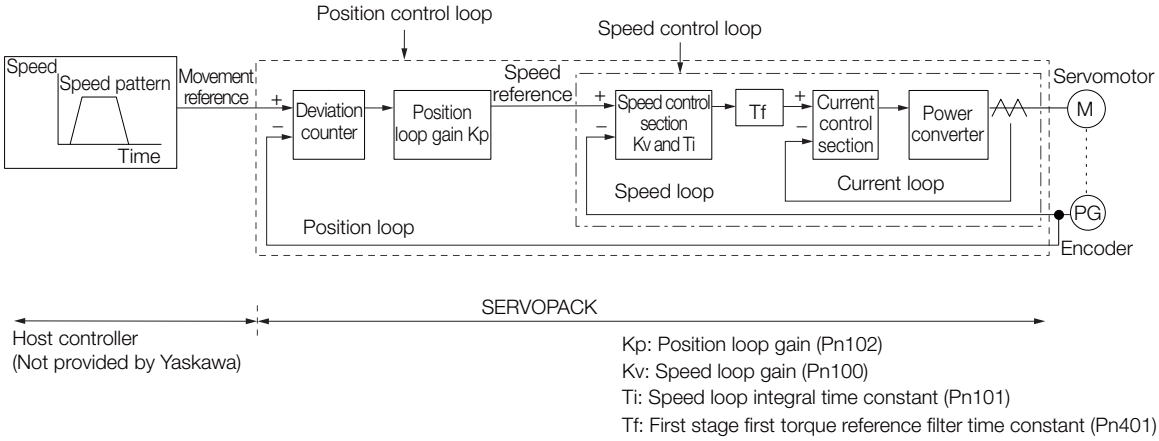

In order to manually tune the servo gains, you must understand the configuration and characteristic of the SERVOPACK and adjust the servo gains individually. In most cases, if you greatly change any one parameter, you must adjust the other parameters again. To check the response characteristic, you must prepare a measuring instrument to monitor the output waveforms from the analog monitor.

The SERVOPACK has three feedback systems (the position loop, speed loop, and current loop), and the response characteristic must be increased more with the inner loops. If this relationship is not maintained, the response characteristic will suffer and vibration will occur more easily.

A sufficient response characteristic is ensured for the current loop. There is never a need for it to be adjusted by the user.

Outline

You can use manual tuning to set the servo gains in the SERVOPACK to increase the response characteristic of the SERVOPACK. For example, you can reduce the positioning time for position control.

Use manual tuning in the following cases.

- When tuning with autotuning without a host reference or autotuning with a host reference does not achieve the desired results
- When you want to increase the servo gains higher than the gains that resulted from autotuning without a host reference or autotuning with a host reference
- When you want to determine the servo gains and moment of inertia ratio yourself

You start manual tuning either from the default parameter settings or from the gain settings that resulted from autotuning without a host reference or autotuning with a host reference.

Applicable Tools

You can monitor the servo gains with the SigmaWin+ or with the analog monitor.

Precautions

Vibration may occur while you are tuning the servo gains. We recommend that you enable vibration alarms (Pn310 = n.□□□2) to detect vibration. Refer to the following section for information on vibration detection.

☞ *6.15 Initializing the Vibration Detection Level* on page 6-99

Vibration alarms are not detected for all vibration. Also, an emergency stop method is necessary to stop the machine safely when an alarm occurs. You must provide an emergency stop device and activate it immediately whenever vibration occurs.

Tuning Procedure Example (for Position Control or Speed Control)

Step	Description
1	Adjust the first stage first torque reference filter time constant (Pn401) so that vibration does not occur.
2	Increase the Speed loop gain (Pn100) and reduce the speed loop integral time constant (Pn101) as far as possible within the range that does not cause machine vibration.
3	Repeat steps 1 and 2 and return the settings about 10% to 20% from the values that you set.
4	For position control, increase the position loop gain (Pn102) within the range that does not cause vibration.

Information

If you greatly change any one servo gain parameter, you must adjust the other parameters again. Do not increase the setting of just one parameter. As a guideline, adjust the settings of the servo gains by approximately 5% each. As a rule, change the servo parameters in the following order.

- To Increase the Response Speed
1. Reduce the torque reference filter time constant.
2. Increase the speed loop gain.
3. Decrease the speed loop integral time constant.
4. Increase the position loop gain.

- To Reduce Response Speed and to Stop Vibration and Overshooting
1. Reduce the position loop gain.
2. Increase the speed loop integral time constant.
3. Decrease the speed loop gain.
4. Increase the torque filter time constant.

Adjusted Servo Gains

You can set the following gains to adjust the response characteristic of the SERVOPACK.

- Pn100: Speed Loop Gain
- Pn101: Speed Loop Integral Time Constant
- Pn102: Position Loop Gain
- Pn401: First Stage First Torque Reference Filter Time Constant

◆ Position Loop Gain

The position loop gain determines the response characteristic of the position loop in the SERVOPACK. If you can increase the setting of the position loop gain, the response characteristic will improve and the positioning time will be shortened. However, you normally cannot increase the position loop gain higher than the inherit vibration frequency of the machine system. Therefore, to increase the setting of the position loop gain, you must increase the rigidity of the machine to increase the inherit vibration frequency of the machine.

Pn102	Position Loop Gain				Position
	Setting Range	Setting Unit	Default Setting	When Enabled	Classification
	10 to 20,000	0.1/s	400	Immediately	Tuning

Information For machines for which a high position loop gain (Pn102) cannot be set, overflow alarms can occur during high-speed operation. If that is the case, you can increase the setting of the following parameter to increase the level for alarm detection.
Use the following condition as a guideline for determining the setting.

$$\text{Pn520} \geq \frac{\text{Maximum feed speed [reference units/s]}}{\text{Pn102} \div 10\ (1/\text{s})} \times 2.0$$

If you use a position reference filter, transient deviation will increase due to the filter time constant. When you make the setting, consider deviation accumulation that may result from the filter.

Pn520	Position Deviation Overflow Alarm Level				Position
	Setting Range	Setting Unit	Default Setting	When Enabled	Classification
	1 to 1,073,741,823	1 reference unit	5,242,880	Immediately	Setup

◆ Speed Loop Gain

This parameter determines the response characteristic of the speed loop. If the response characteristic of the speed loop is low, it becomes a delay factor for the position loop located outside of the speed loop. This will result in overshooting and vibration in the speed reference. Therefore, setting the speed loop gain as high as possible within the range that will not cause the machine system to vibrate will produce a stable servo system with a good response characteristic.

Pn100	Speed Loop Gain				Speed Position Torque
	Setting Range	Setting Unit	Default Setting	When Enabled	Classification
	10 to 20,000	0.1 Hz	400	Immediately	Tuning

$$\text{Setting of Pn103} = \frac{\text{Load moment of inertia at motor shaft } (J_L)}{\text{Servomotor moment of inertia } (L_M)} \times 100(\%)$$

The default setting of Pn103 (Moment of Inertia Ratio) is 100. Before you tune the servo, calculate the moment of inertia ratio with the above formula and set Pn103 to the calculation result.

Pn103	Moment of Inertia Ratio				Speed Position Torque
	Setting Range	Setting Unit	Default Setting	When Enabled	Classification
	0 to 20,000	1%	100	Immediately	Tuning

◆ Speed Loop Integral Time Constant

To enable response to even small inputs, the speed loop has an integral element. The integral element becomes a delay factor in the servo system. If the time constant is set too high, overshooting will occur, positioning settling time will increase, and the response characteristic will suffer.

Pn101	Speed Loop Integral Time Constant				Speed Position
	Setting Range	Setting Unit	Default Setting	When Enabled	Classification
	15 to 51,200	0.01 ms	2,000	Immediately	Tuning

◆ Torque Reference Filter

As shown in the following diagram, the torque reference filter contains a first order lag filter and notch filters arranged in series, and each filter operates independently.

The notch filters can be enabled and disabled with Pn408 = n.□X□X and Pn416 = n.□XXX.

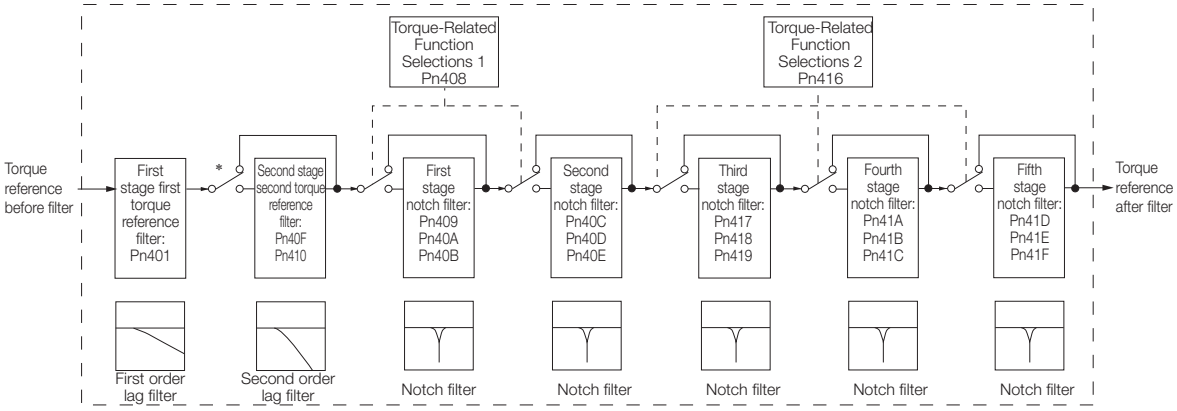

* The second stage second torque reference filter is disabled when Pn40F is set to 5,000 (default setting) and it is enabled when Pn40F is set to a value lower than 5,000.

■ Torque Reference Filter

If you suspect that machine vibration is being caused by the Servo Drive, try adjusting the torque reference filter time constant. This may stop the vibration. The lower the value, the better the control response characteristic will be, but there may be a limit depending on the machine conditions.

Pn401	First Stage First Torque Reference Filter Time Constant			Speed Position Torque	
	Setting Range	Setting Unit	Default Setting	When Enabled	Classification
	0 to 65,535	0.01 ms	100	Immediately	Tuning
Pn40F	Second Stage Second Torque Reference Filter Frequency			Speed Position Torque	
	Setting Range	Setting Unit	Default Setting	When Enabled	Classification
	100 to 5,000	1 Hz	5,000*	Immediately	Tuning
Pn410	Second Stage Second Torque Reference Filter Q Value			Speed Position Torque	
	Setting Range	Setting Unit	Default Setting	When Enabled	Classification
	50 to 100	0.01	50	Immediately	Tuning

* The filter is disabled if you set the parameter to 5,000.

■ Notch Filters

The notch filter can eliminate specific frequency elements generated by the vibration of sources such as resonance of the shaft of a ball screw.

The notch filter puts a notch in the gain curve at the specific vibration frequency (called the notch frequency). The frequency components near the notch frequency can be reduced or removed with a notch filter.

Notch filters are set with three parameters for the notch filter frequency, notch filter Q value, and notch filter depth. This section describes the notch filter Q value and notch filter depth.

- Notch filter Q Value

The setting of the notch filter Q value determines the width of the frequencies that are filtered for the notch filter frequency. The width of the notch changes with the notch filter Q value. The larger the notch filter Q value is, the steeper the notch is and the narrower the width of frequencies that are filtered is.

The notch filter frequency characteristics for different notch filter Q values are shown below.

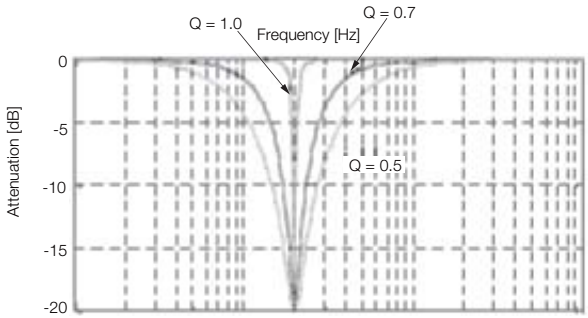

Note: The above notch filter frequency characteristics are based on calculated values and may be different from actual characteristics.

- Notch Filter Depth

The setting of the notch filter depth determines the depth of the frequencies that are filtered for the notch filter frequency. The depth of the notch changes with the notch filter depth. The smaller the notch filter depth is, the deeper the notch is, increasing the effect of vibration suppression. However, if the value is too small, vibration can actually increase.

The notch filter is disabled if the notch filter depth, d, is set to 1.0 (i.e., if Pn419 is set to 1,000).

The notch filter frequency characteristics for different notch filter depths are shown below.

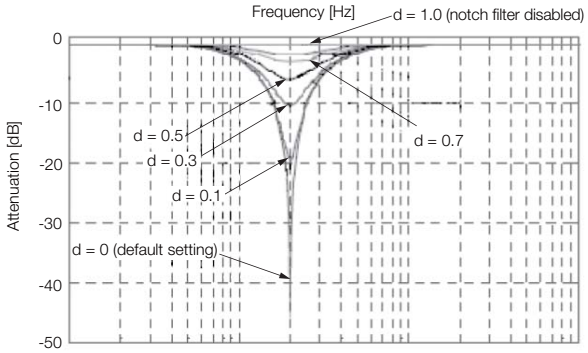

Note: The above notch filter frequency characteristics are based on calculated values and may be different from actual characteristics.

You can enable or disable the notch filter with Pn408 and Pn416.

Parameter		Meaning	When Enabled	Classification
Pn408	n.□□□0 (default setting)	Disable first stage notch filter.	Immediately	Setup
	n.□□□1	Enable first stage notch filter.		
	n.□0□□ (default setting)	Disable second stage notch filter.		
	n.□1□□	Enable second stage notch filter.		
Pn416	n.□□□0 (default setting)	Disable third stage notch filter.		
	n.□□□1	Enable third stage notch filter.		
	n.□□0□ (default setting)	Disable fourth stage notch filter.		
	n.□□1□	Enable fourth stage notch filter.		
	n.□0□□ (default setting)	Disable fifth stage notch filter.		
	n.□1□□	Enable fifth stage notch filter.		

Set the machine vibration frequencies in the notch filter parameters.

Pn409	First Stage Notch Filter Frequency			Speed Position Torque	
	Setting Range	Setting Unit	Default Setting	When Enabled	Classification
	50 to 5,000	1 Hz	5,000	Immediately	Tuning
Pn40A	First Stage Notch Filter Q Value			Speed Position Torque	
	Setting Range	Setting Unit	Default Setting	When Enabled	Classification
	50 to 1,000	0.01	70	Immediately	Tuning
Pn40B	First Stage Notch Filter Depth			Speed Position Torque	
	Setting Range	Setting Unit	Default Setting	When Enabled	Classification
	0 to 1,000	0.001	0	Immediately	Tuning
Pn40C	Second Stage Notch Filter Frequency			Speed Position Torque	
	Setting Range	Setting Unit	Default Setting	When Enabled	Classification
	50 to 5,000	1 Hz	5,000	Immediately	Tuning
Pn40D	Second Stage Notch Filter Q Value			Speed Position Torque	
	Setting Range	Setting Unit	Default Setting	When Enabled	Classification
	50 to 1,000	0.01	70	Immediately	Tuning
Pn40E	Second Stage Notch Filter Depth			Speed Position Torque	
	Setting Range	Setting Unit	Default Setting	When Enabled	Classification
	0 to 1,000	0.001	0	Immediately	Tuning
Pn417	Third Stage Notch Filter Frequency			Speed Position Torque	
	Setting Range	Setting Unit	Default Setting	When Enabled	Classification
	50 to 5,000	1 Hz	5,000	Immediately	Tuning
Pn418	Third Stage Notch Filter Q Value			Speed Position Torque	
	Setting Range	Setting Unit	Default Setting	When Enabled	Classification
	50 to 1,000	0.01	70	Immediately	Tuning
Pn419	Third Stage Notch Filter Depth			Speed Position Torque	
	Setting Range	Setting Unit	Default Setting	When Enabled	Classification
	0 to 1,000	0.001	0	Immediately	Tuning
Pn41A	Fourth Stage Notch Filter Frequency			Speed Position Torque	
	Setting Range	Setting Unit	Default Setting	When Enabled	Classification
	50 to 5,000	1 Hz	5,000	Immediately	Tuning
Pn41B	Fourth Stage Notch Filter Q Value			Speed Position Torque	
	Setting Range	Setting Unit	Default Setting	When Enabled	Classification
	50 to 1,000	0.01	70	Immediately	Tuning
Pn41C	Fourth Stage Notch Filter Depth			Speed Position Torque	
	Setting Range	Setting Unit	Default Setting	When Enabled	Classification
	0 to 1,000	0.001	0	Immediately	Tuning
Pn41D	Fifth Stage Notch Filter Frequency			Speed Position Torque	
	Setting Range	Setting Unit	Default Setting	When Enabled	Classification
	50 to 5,000	1 Hz	5,000	Immediately	Tuning
Pn41E	Fifth Stage Notch Filter Q Value			Speed Position Torque	
	Setting Range	Setting Unit	Default Setting	When Enabled	Classification
	50 to 1,000	0.01	70	Immediately	Tuning
Pn41F	Fifth Stage Notch Filter Depth			Speed Position Torque	
	Setting Range	Setting Unit	Default Setting	When Enabled	Classification
	0 to 1,000	0.001	0	Immediately	Tuning

Important

- Do not set notch filter frequencies (Pn409, Pn40C, Pn417, Pn41A, and Pn41D) that are close to the speed loop's response frequency. Set a frequency that is at least four times the speed loop gain (Pn100). (However, Pn103 (Moment of Inertia Ratio) must be set correctly. If the setting is not correct, vibration may occur and the machine may be damaged.
- Change the notch filter frequencies (Pn409, Pn40C, Pn417, Pn41A, and Pn41D) only while the Servomotor is stopped. Vibration may occur if a notch filter frequency is changed during operation.

Guidelines for Manually Tuning Servo Gains

When you manually adjust the parameters, make sure that you completely understand the information in the product manual and use the following conditional expressions as guidelines. The appropriate values of the parameter settings are influenced by the machine specifications, so they cannot be determined universally. When you adjust the parameters, actually operate the machine and use the SigmaWin+ or analog monitor to monitor operating conditions. Even if the status is stable while the Servomotor is stopped, an unstable condition may occur when an operation reference is input. Therefore, input operation references and adjust the servo gains as you operate the Servomotor.

Stable gain: Settings that provide a good balance between parameters.

However, if the load moment of inertia is large and the machine system contains elements prone to vibration, you must sometimes use a setting that is somewhat higher to prevent the machine from vibrating.

Critical gain: Settings for which the parameters affect each other

Depending on the machine conditions, overshooting and vibration may occur and operation may not be stable. If the critical gain condition expressions are not met, operation will become more unstable, and there is a risk of abnormal motor shaft vibration and round-trip operation with a large amplitude. Always stay within the critical gain conditions.

If you use the torque reference filter, second torque reference filter, and notch filters together, the interference between the filters and the speed loop gain will be superimposed. Allow leeway in the adjustments.

Important

The following adjusted value guidelines require that the setting of Pn103 (Moment of Inertia Ratio) is correctly set for the actual machine.

◆ When Pn10B = n.□□0□ (PI Control)

Guidelines are given below for gain settings 1.

The same guidelines apply to gain settings 2 (Pn104, Pn105, Pn106, and Pn412).

- Speed Loop Gain (Pn100 [Hz]) and Position Loop Gain (Pn102 [/s])
  Stable gain: Pn102 [/s] ≤ 2π × Pn100/4 [Hz]
  Critical gain: Pn102 [/s] < 2π × Pn100 [Hz]

- Speed Loop Gain (Pn100 [Hz]) and Speed Loop Integral Time Constant (Pn101 [ms])
  Stable gain: Pn101 [ms] ≥ 4,000/(2π × Pn100 [Hz])
  Critical gain: Pn101 [ms] > 1,000/(2π × Pn100 [Hz])

- Speed Loop Gain (Pn100 [Hz]) and First Stage First Torque Reference Filter Time Constant (Pn401 [ms])
  Stable gain: Pn401 [ms] ≤ 1,000/(2π × Pn100 [Hz] × 4)
  Critical gain: Pn401 [ms] < 1,000/(2π × Pn100 [Hz] × 1)

- Speed Loop Gain (Pn100 [Hz]) and Second Stage Second Torque Reference Filter Frequency (Pn40F [Hz])
  Critical gain: Pn40F [Hz] > 4 × Pn100 [Hz]
  Note: Set the Second Stage Second Torque Reference Filter Q Value (Pn410) to 0.70.

- Speed Loop Gain (Pn100 [Hz]) and First Stage Notch Filter Frequency (Pn409 [Hz]) (or Second Stage Notch Filter Frequency (Pn40C [Hz]))
  Critical gain: Pn409 [Hz] > 4 × Pn100 [Hz]

- Speed Loop Gain (Pn100 [Hz]) and Speed Feedback Filter Time Constant (Pn308 [ms])
  Stable gain: Pn308 [ms] ≤ 1,000/(2π × Pn100 [Hz] × 4)
  Critical gain: Pn308 [ms] < 1,000/(2π × Pn100 [Hz] × 1)

◆ When Pn10B = n.□□1□ (I-P Control)

Guidelines are given below for gain settings 1.

The same guidelines apply to gain settings 2 (Pn104, Pn105, Pn106, and Pn412).

For I-P control, the relationships between the speed loop integral time constant, speed loop gain, and position loop gain are different from the relationships for PI control. The relationship between other servo gains is the same as for PI control.

- Speed Loop Gain (Pn100 [Hz]) and Speed Loop Integral Time Constant (Pn101 [ms])
  Stable gain: Pn100 [Hz] ≥ 320/Pn101 [ms]
- Position Loop Gain (Pn102 [/s]) and Speed Loop Integral Time Constant (Pn101 [ms])
  Stable gain: Pn102 [/s] ≤ 320/Pn101 [ms]

Information

Selecting the Speed Loop Control Method (PI Control or I-P Control)
Usually, I-P control is effective for high-speed positioning and high-speed, high-precision processing applications. With I-P control, you can use a lower position loop gain than for PI control to reduce the positioning time and reduce arc radius reduction. However, if you can use mode switching to change to proportional control to achieve the desired application, then using PI control would be the normal choice.

◆ Decimal Points in Parameter Settings

For the SGD7S SERVOPACKs, decimal places are given for the settings of parameters on the Digital Operator, Panel Operator, and in the manual. For example with Pn100 (Speed Loop Gain), Pn100 = 40.0 is used to indicate a setting of 40.0 Hz. In the following adjusted value guidelines, the decimal places are also given.

Example

- Speed Loop Gain (Pn100 [Hz]) and Speed Loop Integral Time Constant (Pn101 [ms])
  Stable gain: Pn101 [ms] ≥ 4,000/(2π × Pn100 [Hz]), therefore
  If Pn100 = 40.0 [Hz], then Pn101 = 4,000/(2π × 40.0) ≈ 15.92 [ms].

Model Following Control

You can use model following control to improve response characteristic and shorten positioning time. You can use model following control only with position control.

Normally, the parameters that are used for model following control are automatically set along with the servo gains by executing autotuning or custom tuning. However, you must adjust them manually in the following cases.

- When the tuning results for autotuning or custom tuning are not acceptable
- When you want to increase the response characteristic higher than that achieved by the tuning results for autotuning or custom tuning
- When you want to determine the servo gains and model following control parameters yourself

The block diagram for model following control is provided below.

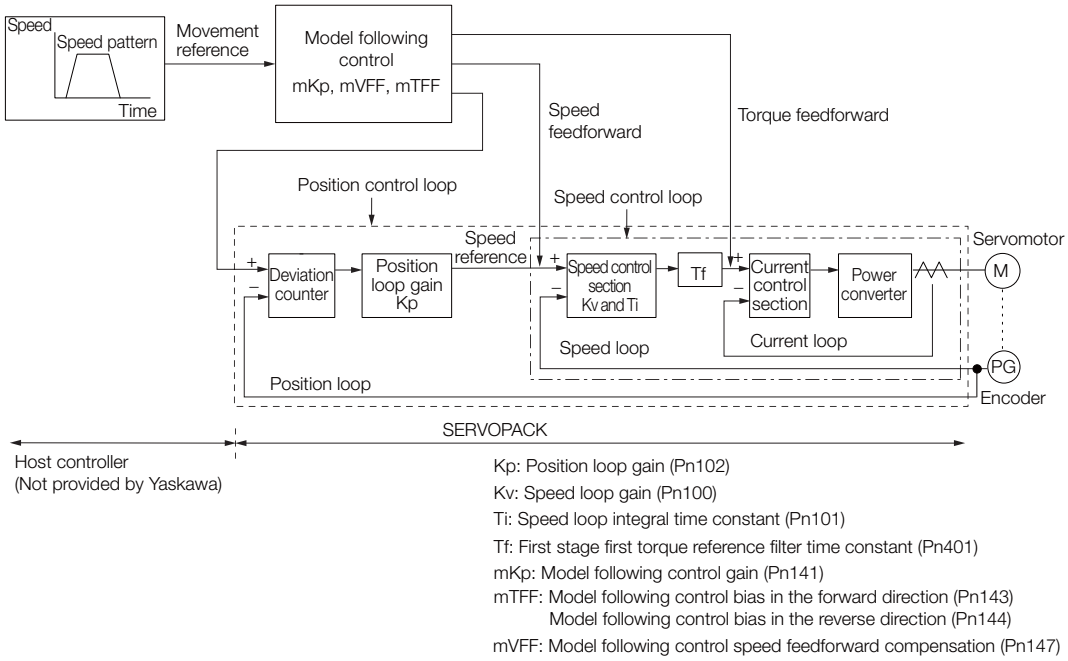

◆ Manual Tuning Procedure

Use the following tuning procedure for using model following control.

Step	Description
1	Friction compensation must also be used. Set the friction compensation parameters. Refer to the following section for the setting procedure. ☞ *8.12.2 Friction Compensation* on page 8-70
2	Adjust the servo gains. Refer to the following section for an example procedure. ☞ *Tuning Procedure Example (for Position Control or Speed Control)* on page 8-77 Note: 1. Set the moment of inertia ratio (Pn103) as accurately as possible. 2. Refer to the guidelines for manually tuning the servo gains and set a stable gain for the position loop gain (Pn102). ☞ *Guidelines for Manually Tuning Servo Gains* on page 8-82
3	Increase the model following control gain (Pn141) as much as possible within the range in which overshooting and vibration do not occur.
4	If overshooting occurs or if the response is different for forward and reverse operation, fine-tune model following control with the following settings: model following control bias in the forward direction (Pn143), model following control bias in the reverse direction (Pn144), and model following control speed feedforward compensation (Pn147).

◆ Related Parameters

Next we will describe the following parameters that are used for model following control.

- Pn140 (Model Following Control-Related Selections)
- Pn141 (Model Following Control Gain)
- Pn143 (Model Following Control Bias in the Forward Direction)
- Pn144 (Model Following Control Bias in the Reverse Direction)
- Pn147 (Model Following Control Speed Feedforward Compensation)

■ Model Following Control-Related Selections

Set Pn140 = n.□□□X to specify whether to use model following control.

If you use model following control with vibration suppression, set Pn140 to n.□□1□ or Pn140 = n.□□2□. When you also perform vibration suppression, adjust vibration suppression with custom tuning in advance.

Note: If you use vibration suppression (Pn140 = n.□□1□ or Pn140 = n.□□2□), always set Pn140 to n.□□□1 (Use model following control).

Parameter		Function	When Enabled	Classification
Pn140	n.□□□0 (default setting)	Do not use model following control.	Immediately	Tuning
	n.□□□1	Use model following control.		
	n.□□0□ (default setting)	Do not perform vibration suppression.		
	n.□□1□	Perform vibration suppression for a specific frequency.		
	n.□□2□	Perform vibration suppression for two specific frequencies.		

■ Model Following Control Gain

The model following control gain determines the response characteristic of the servo system. If you increase the setting of the model following control gain, the response characteristic will improve and the positioning time will be shortened. The response characteristic of the servo system is determined by this parameter, and not by Pn102 (Position Loop Gain).

Pn141	Model Following Control Gain			Position	
	Setting Range	Setting Unit	Default Setting	When Enabled	Classification
	10 to 20,000	0.1/s	500	Immediately	Tuning

Information

For machines for which a high model following control gain cannot be set, the size of the position deviation in model following control will be determined by the setting of the model following control gain. For a machine with low rigidity, in which a high model following control gain cannot be set, position deviation overflow alarms may occur during high-speed operation. If that is the case, you can increase the setting of the following parameter to increase the level for alarm detection.
Use the following conditional expression for reference in determining the setting.

$$\text{Pn 520} \geq \frac{\text{Maximum feed speed [reference units/s]}}{\text{Pn 141/10 [1/s]}} \times 2.0$$

Pn520	Position Deviation Overflow Alarm Level			Position	
	Setting Range	Setting Unit	Default Setting	When Enabled	Classification
	1 to 1,073,741,823	1 reference unit	5,242,880	Immediately	Setup

■ Model Following Control Bias in the Forward Direction and Model Following Control Bias in the Reverse Direction

If the response is different for forward and reverse operation, use the following parameters for fine-tuning.

If you decrease the settings, the response characteristic will be lowered but overshooting will be less likely to occur.

	Model Following Control Bias in the Forward Direction				Position
Pn143	Setting Range	Setting Unit	Default Setting	When Enabled	Classification
	0 to 10,000	0.1%	1,000	Immediately	Tuning
	Model Following Control Bias in the Reverse Direction				Position
Pn144	Setting Range	Setting Unit	Default Setting	When Enabled	Classification
	0 to 10,000	0.1%	1,000	Immediately	Tuning

■ Model Following Control Speed Feedforward Compensation

If overshooting occurs even after you adjust the model following control gain, model following control bias in the forward direction, and model following control bias in the reverse direction, you may be able to improve performance by setting the following parameter.

If you decrease the settings, the response characteristic will be lowered but overshooting will be less likely to occur.

	Model Following Control Speed Feedforward Compensation				Position
Pn147	Setting Range	Setting Unit	Default Setting	When Enabled	Classification
	0 to 10,000	0.1%	1,000	Immediately	Tuning

■ Model Following Control Type Selection

When you enable model following control, you can select the model following control type. Normally, set Pn14F to n.□□□1 (Use model following control type 2) (default setting). If compatibility with previous models is required, set Pn14F to n.□□□0 (Use model following control type 1).

Parameter		Meaning	When Enabled	Classification
Pn14F	n.□□□0	Use model following control type 1.	After restart	Tuning
	n.□□□1 (default setting)	Use model following control type 2.		

8.13.2 Compatible Adjustment Functions

The compatible adjustment functions are used together with manual tuning. You can use these functions to improve adjustment results. These functions allow you to use the same functions as for Σ-III-Series SERVOPACKs to adjust Σ-7-Series SERVOPACKs.

Feedforward

The feedforward function applies feedforward compensation to position control to shorten the positioning time.

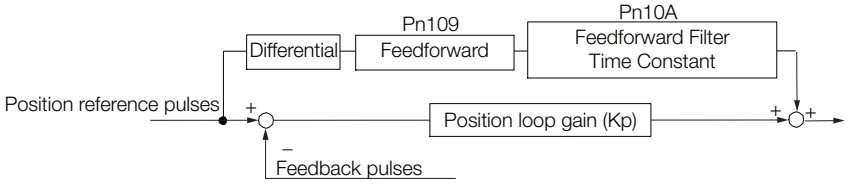

Pn109	Feedforward				Position
	Setting Range	Setting Unit	Default Setting	When Enabled	Classification
	0 to 100	1%	0	Immediately	Tuning
Pn10A	Feedforward Filter Time Constant				Position
	Setting Range	Setting Unit	Default Setting	When Enabled	Classification
	0 to 6,400	0.01 ms	0	Immediately	Tuning

Note: If you set the feedforward value too high, the machine may vibrate. As a guideline, use a setting of 80% or less.

Torque Feedforward and Speed Feedforward

You can use the torque feedforward and speed feedforward functions to help shorten the positioning time. The reference is created from the differential of the position reference at the host controller.

Torque feedforward: This is effective for speed control or position control. It is sent from the host controller along with the speed reference. Connect the speed reference from the host controller to the V-REF (CN1-5 and CN1-6) signal and the torque feedforward reference from the host controller to the T-REF (CN1- 9 and CN1-10) signal.

Speed feedforward: This is effective only for position control. It is sent to the SERVOPACK from the host controller along with the position reference. Connect the position reference from the host controller to the PULS and SIGN (CN1-7,CN1 -8, CN1-11, and CN1-12) signals and the speed feedforward reference from the host controller to the V-REF (CN1-5 and CN1-6) signal.

◆ Examples of Connections to Host Controllers

■ When SERVOPACK Performs Speed Control

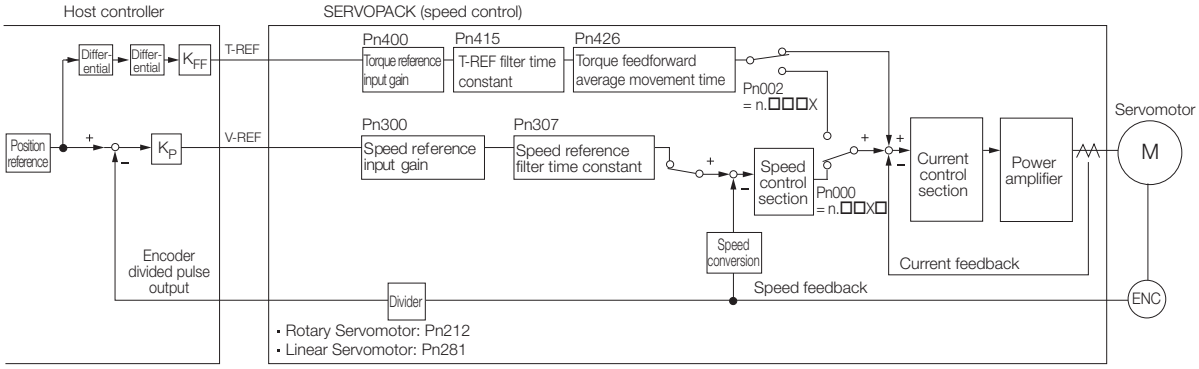

Kp: Position loop gain
KFF: Feedforward gain

■ When SERVOPACK Performs Position Control

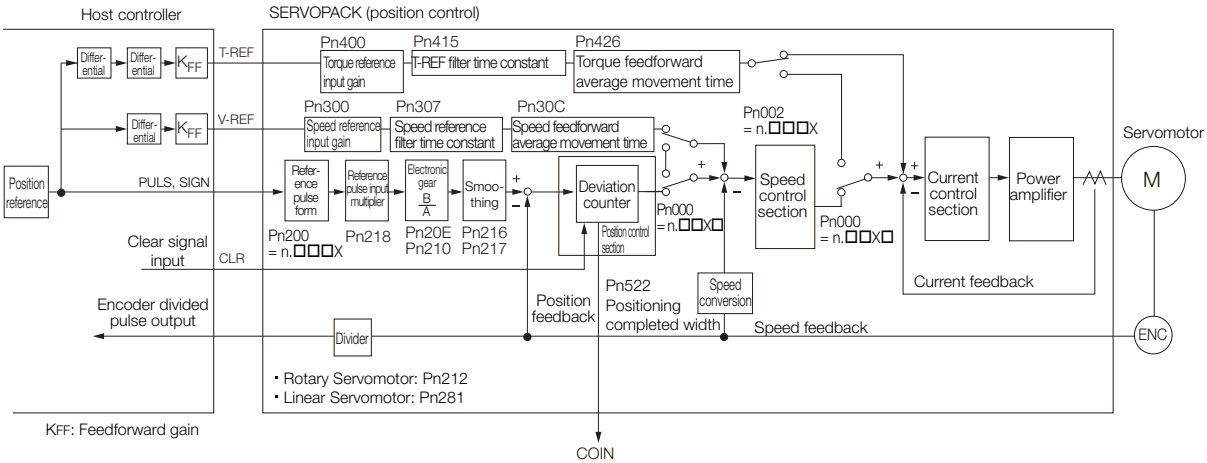

◆ Related Parameters

■ Torque Feedforward

Torque feedforward is allocated to T-REF (Pn002 = n.□□□X) and it is set using the torque reference input gain (Pn400) and T-REF filter time constant (Pn415).

The default setting of Pn400 is 30. Therefore, if the torque feedforward value is ±3 V, then the torque is limited to ±100% of the rated torque.

Parameter		Meaning	When Enabled	Classification
Pn002	n.□□□0 (default setting)	Do not use T-REF.	After restart	Setup
	n.□□□1	Use T-REF as an external torque limit input.		
	n.□□□2	Use T-REF as a torque feedback input.		
	n.□□□3	Use T-REF as an external torque limit input when /P-CL or /N-CL is active.		

Pn400	Torque Reference Input Gain			Speed Position Torque	
	Setting Range	Setting Unit	Default Setting	When Enabled	Classification
	10 to 100	0.1 V/rated torque	30	Immediately	Setup
Pn415	T-REF Filter Time Constant			Speed Position Torque	
	Setting Range	Setting Unit	Default Setting	When Enabled	Classification
	0 to 65,535	0.01 ms	0	Immediately	Setup
Pn426	Torque feedforward average movement time			Speed Position	
	Setting Range	Setting Unit	Default Setting	When Enabled	Classification
	0 to 5,100	0.1 ms	0	Immediately	Setup

Note: 1. Overshooting will occur if you set the torque feedforward too high. Set the optimum value while monitoring the response.
2. You cannot use the torque feedforward function together with torque limiting with an analog voltage reference.

■ Speed Feedforward

You set the speed feedforward function with the position control option (Pn207 = n.□□X□) and the speed reference input gain (Pn300).

The default setting of Pn300 is 600. Therefore, if the speed feedforward value is ±6 V, then it will indicate the rated speed.

Parameter		Meaning	When Enabled	Classification
Pn207	n.□□0□ (default setting)	Do not use V-REF.	After restart	Setup
	n.□□1□	Use V-REF as a speed feedback input.		

Pn300	Speed Reference Input Gain			Speed Position Torque	
	Setting Range	Setting Unit	Default Setting	When Enabled	Classification
	150 to 3,000	0.01 V/Rated motor speed	600	Immediately	Setup
Pn307	Speed Reference Filter Time Constant			Speed Position	
	Setting Range	Setting Unit	Default Setting	When Enabled	Classification
	0 to 65,535	0.01 ms	40	Immediately	Setup
Pn30C	Speed Feedforward Average Movement Time			Position	
	Setting Range	Setting Unit	Default Setting	When Enabled	Classification
	0 to 5,100	0.1 ms	0	Immediately	Setup

Note: Overshooting will occur if you set the feedforward too high. Set the optimum value while monitoring the response.

Mode Switching (Changing between Proportional and PI Control)

You can use mode switching to automatically change between proportional control and PI control.
Overshooting caused by acceleration and deceleration can be suppressed and the settling time can be reduced by setting the switching condition and switching levels.

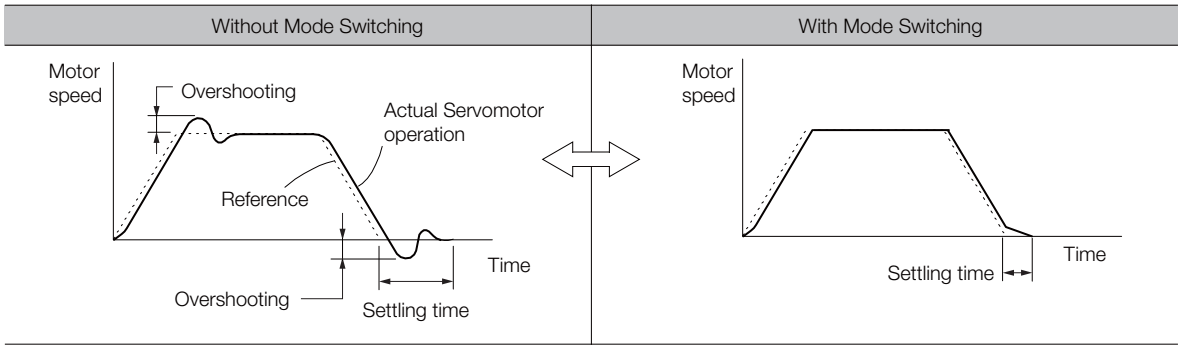

◆ Related Parameters

Select the switching condition for mode switching with Pn10B = n.□□□X.

Parameter		Mode Switching Selection	Parameter That Sets the Level		When Enabled	Classification
			Rotary Servomotor	Linear Servomotor		
Pn10B	n.□□□0 (default setting)	Use the internal torque reference as the condition.	Pn10C		Immediately	Setup
	n.□□□1	Use the speed reference as the condition.	Pn10D	Pn181		
	n.□□□2	Use the acceleration reference as the condition.	Pn10E	Pn182		
	n.□□□3	Use the position deviation as the condition.	Pn10F			
	n.□□□4	Do not use mode switching.	–			

■ Parameters That Set the Switching Levels

• Rotary Servomotors

Pn10C	Mode Switching Level for Torque Reference			Speed	Position
	Setting Range	Setting Unit	Default Setting	When Enabled	Classification
	0 to 800	1%	200	Immediately	Tuning
Pn10D	Mode Switching Level for Speed Reference			Speed	Position
	Setting Range	Setting Unit	Default Setting	When Enabled	Classification
	0 to 10,000	1 min^{-1}	0	Immediately	Tuning
Pn10E	Mode Switching Level for Acceleration			Speed	Position
	Setting Range	Setting Unit	Default Setting	When Enabled	Classification
	0 to 30,000	1 min^{-1}/s	0	Immediately	Tuning
Pn10F	Mode Switching Level for Position Deviation				Position
	Setting Range	Setting Unit	Default Setting	When Enabled	Classification
	0 to 10,000	1 reference unit	0	Immediately	Tuning

• Linear Servomotors

Pn10C	Mode Switching Level for Force Reference			Speed	Position
	Setting Range	Setting Unit	Default Setting	When Enabled	Classification
	0 to 800	1%	200	Immediately	Tuning
Pn181	Mode Switching Level for Speed Reference			Speed	Position
	Setting Range	Setting Unit	Default Setting	When Enabled	Classification
	0 to 10,000	1 mm/s	0	Immediately	Tuning
Pn182	Mode Switching Level for Acceleration			Speed	Position
	Setting Range	Setting Unit	Default Setting	When Enabled	Classification
	0 to 30,000	1 mm/s^2	0	Immediately	Tuning
Pn10F	Mode Switching Level for Position Deviation				Position
	Setting Range	Setting Unit	Default Setting	When Enabled	Classification
	0 to 10,000	1 reference unit	0	Immediately	Tuning

■ Using the Internal Torque Reference as the Mode Switching Condition (Default Setting)

When the Internal torque reference equals or exceeds the torque set for the mode switching level for torque reference (Pn10C), the speed loop is changed to P control.

The default setting for the torque reference level is 200%.

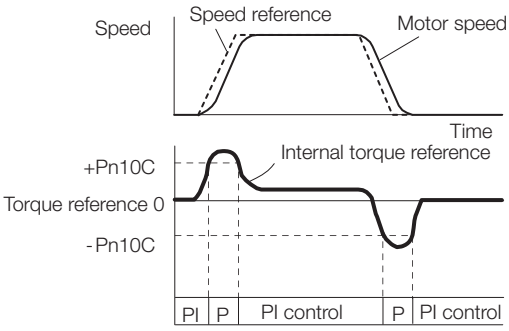

■ Using the Speed Reference as the Mode Switching Condition

- Rotary Servomotors
  When the speed reference equals or exceeds the speed set for the mode switching level for a speed reference (Pn10D), the speed loop is changed to P control.

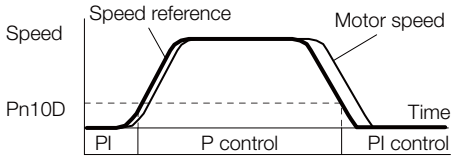

- Linear Servomotors
  When the speed reference equals or exceeds the speed set for the mode switching level for a speed reference (Pn181), the speed loop is changed to P control.

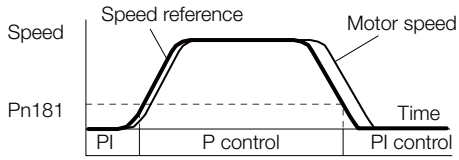

■ Using the Acceleration as the Mode Switching Condition

- Rotary Servomotors
  When the speed reference equals or exceeds the acceleration rate set for the mode switching level for acceleration (Pn10E), the speed loop is changed to P control.

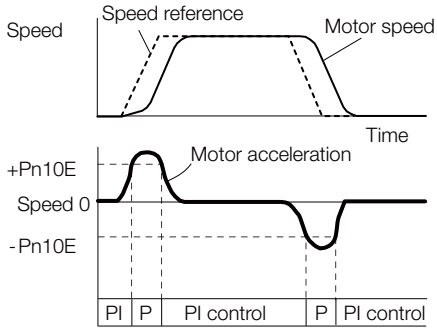

- Linear Servomotors
  When the speed reference equals or exceeds the acceleration rate set for the mode switching level for acceleration (Pn182), the speed loop is changed to P control.

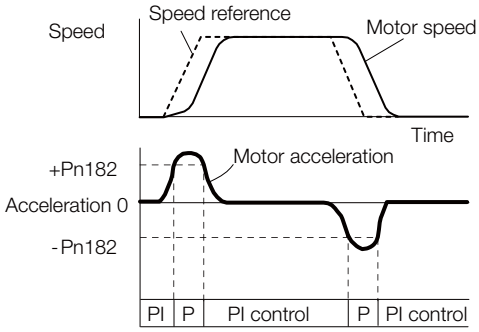

■ Using the Position Deviation as the Mode Switching Condition

When the position deviation equals or exceeds the value set for the mode switching level for position deviation (Pn10F), the speed loop is changed to P control.

This setting is enabled only for position control.

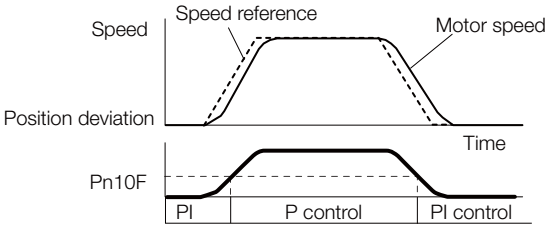

Position Integral

The position integral is the integral function of the position loop. It is used for the electronic cams and electronic shafts when using the SERVOPACK with a Yaskawa MP3000-Series Machine Controller.

Pn11F	Position Integral Time Constant				Position
	Setting Range	Setting Unit	Default Setting	When Enabled	Classification
	0 to 50,000	0.1 ms	0	Immediately	Tuning

8.14 Diagnostic Tools

8.14.1 Mechanical Analysis

Overview

You can connect the SERVOPACK to a computer to measure the frequency characteristics of the machine. This allows you to measure the frequency characteristics of the machine without using a measuring instrument.

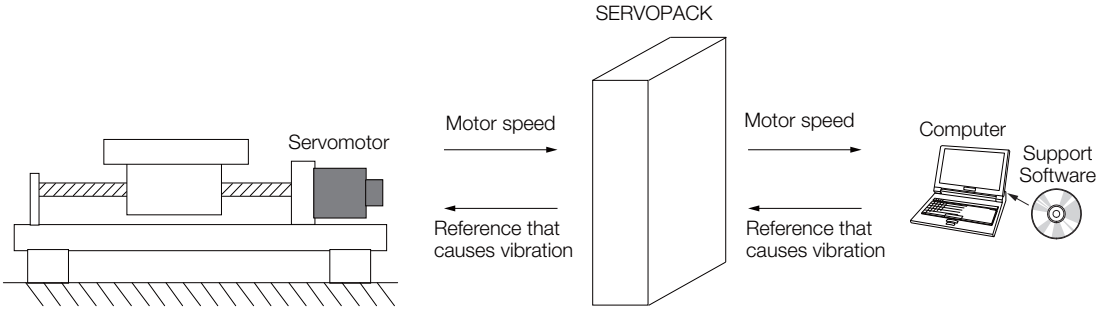

The Servomotor is used to cause machine vibration and then the speed frequency characteristics for the motor torque are measured. The measured frequency characteristics can be used to determine the machine resonance.

You determine the machine resonance for use in servo tuning and as reference for considering changes to the machine. The performance of the servo cannot be completely utilized depending on the rigidity of the machine. You may need to consider making changes to the machine. The information can also be used as reference for servo tuning to help you adjust parameters, such as the servo rigidity and torque filter time constant.

You can also use the information to set parameters, such as the notch filters.

⚠ WARNING

- Mechanical analysis requires operating the Servomotor and therefore presents hazards. Before you execute mechanical analysis, check the information provided in the SigmaWin+ operating manual.

Frequency Characteristics

The Servomotor is used to cause the machine to vibrate and the frequency characteristics from the torque to the motor speed are measured to determine the machine characteristics. For a normal machine, the resonance frequencies are clear when the frequency characteristics are plotted on graphs with the gain and phase (Bode plots). The Bode plots show the size (gain) of the response of the machine to which the torque is applied, and the phase delay (phase) in the response for each frequency. Also, the machine resonance frequency can be determined from the maximum frequency of the valleys (anti-resonance) and peaks (resonance) of the gain and the phase delay.

For a Servomotor without a load or for a rigid mechanism, the gain and phase change gradually in the Bode plots.

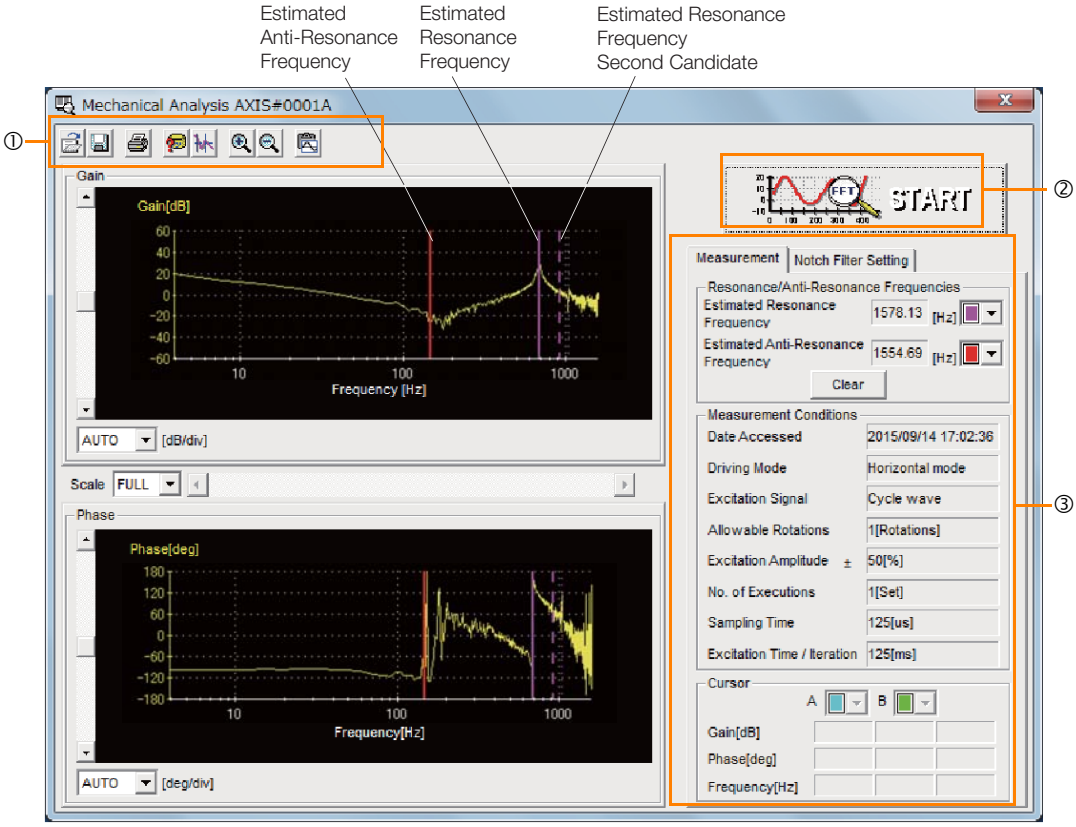

① Toolbar

② **START** Button

Click the **START** Button to start analysis.

③ **Measurement** and **Notch Filter Setting** Tab Pages

Measurement Tab Page: Displays detailed information on the results of analysis.

Notch Filter Setting Tab Page: Displays the notch filter frequencies. You can set these values in the parameters.

8.14.2 Easy FFT

The machine is made to vibrate and a resonance frequency is detected from the generated vibration to set notch filters according to the detected resonance frequencies. This is used to eliminate high-frequency vibration and noise.

During execution of Easy FFT, a frequency waveform reference is sent from the SERVOPACK to the Servomotor to automatically cause the shaft to rotate multiple times within 1/4th of a rotation, thus causing the machine to vibrate.

Execute Easy FFT after the servo is turned OFF if operation of the SERVOPACK results in high-frequency noise and vibration.

⚠ WARNING

- Never touch the Servomotor or machine during execution of Easy FFT. Doing so may result in injury.

⚠ CAUTION

- Use Easy FFT when the servo gain is low, such as in the initial stage of servo tuning. If you execute Easy FFT after you increase the gain, the machine may vibrate depending on the machine characteristics or gain balance.

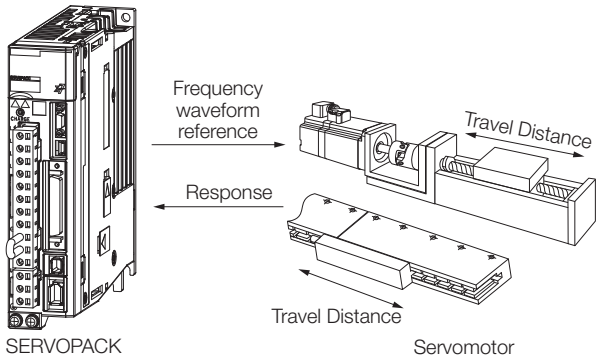

Easy FFT is built into the SERVOPACK for compatibility with previous products. Normally use autotuning without a host reference for tuning.

Preparations

Always check the following before you execute Easy FFT.

- The parameters must not be write prohibited.
- The main circuit power supply must be ON.
- The test without a motor function must be disabled (Pn00C = n.□□□0).
- There must be no alarms.
- There must be no hard wire base block (HWBB).
- The servo must be OFF.
- There must be no overtravel.
- An external reference must not be input.

Applicable Tools

The following table lists the tools that you can use to perform EasyFFT.

Tool	Fn No./Function Name	Operating Procedure Reference
Panel Operator	Fn206	*13.4.33 Easy FFT (Fn206)* on page 13-32
Digital Operator	Fn206	Σ-7-Series Digital Operator Operating Manual (Manual No.: SIEP S800001 33)
SigmaWin+	***Diagnostic - Easy FFT***	*Operating Procedure* on page 8-96

Operating Procedure

Use the following procedure for Easy FFT.

1. Click the Servo Drive Button in the workspace of the Main Window of the SigmaWin+.

2. Select **Easy FFT** in the Menu Dialog Box.
   The Easy FFT Dialog Box will be displayed.
   Click the **Cancel** Button to cancel Easy FFT. You will return to the main window.

3. Click the **OK** Button.

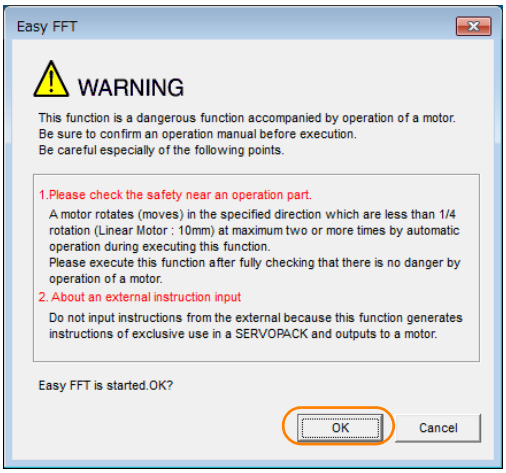

4. Click the **Servo ON** Button.

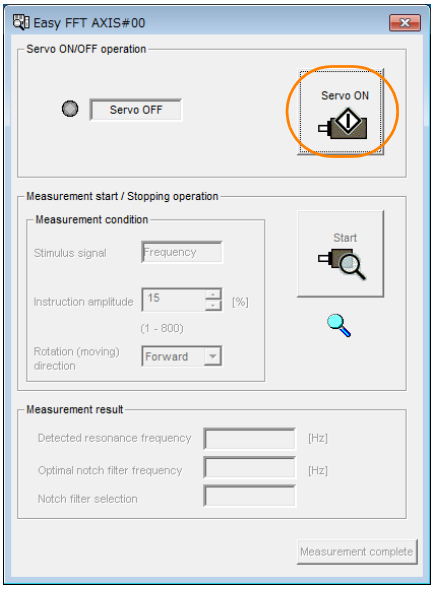

5. Select the instruction (reference) amplitude and the rotation direction in the **Measurement condition** Area, and then click the **Start** Button.
The Servomotor shaft will rotate and measurements will start.

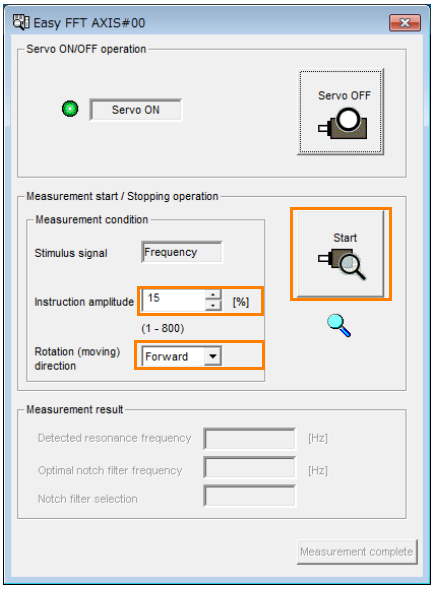

When measurements have been completed, the measurement results will be displayed.

6. Check the results in the **Measurement result** Area and then click the **Measurement complete** Button.

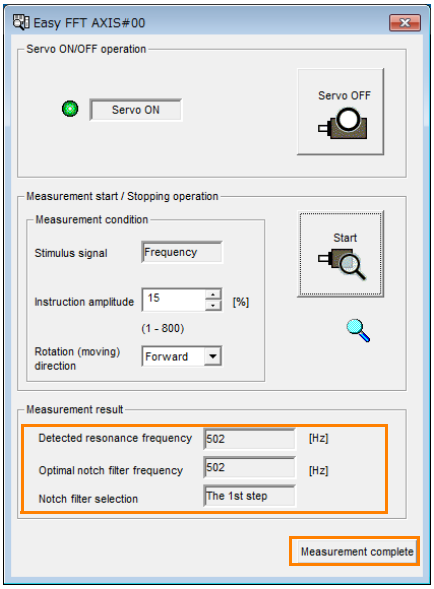

7. Click the **Result Writing** Button if you want to set the measurement results in the parameters.

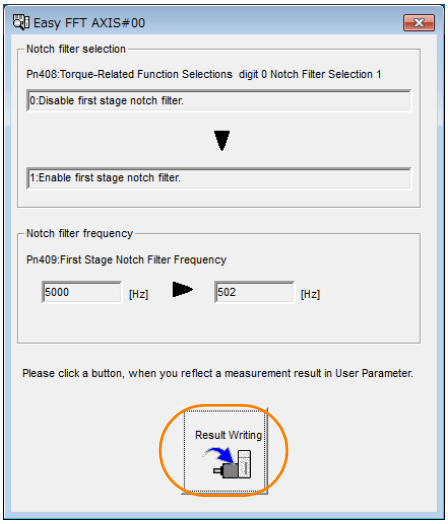

This concludes the procedure to set up Easy FFT.

Related Parameters

The following parameters are automatically adjusted or used as reference when you execute Easy FFT.

Do not change the settings of these parameters during execution of Easy FFT.

Parameter	Name	Automatic Changes
Pn408	Torque-Related Function Selections	Yes
Pn409	First Stage Notch Filter Frequency	Yes
Pn40A	First Stage Notch Filter Q Value	No
Pn40C	Second Stage Notch Filter Frequency	Yes
Pn40D	Second Stage Notch Filter Q Value	No
Pn456	Sweep Torque Reference Amplitude	No

Yes: The parameter is automatically set.

No: The parameter is not automatically set, but the setting is read during execution.

Monitoring

9

This chapter provides information on monitoring SERVOPACK product information and SERVOPACK status.

9.1 Monitoring Product Information 9-2

9.1.1 Items That You Can Monitor 9-2
9.1.2 Operating Procedures 9-3

9.2 Monitoring SERVOPACK Status 9-4

9.2.1 Servo Drive Status 9-4
9.2.2 Monitoring Operation, Status, and I/O 9-4
9.2.3 I/O Signals Status Monitor 9-6

9.3 Monitoring Machine Operation Status and Signal Waveforms . . 9-8

9.3.1 Items That You Can Monitor 9-8
9.3.2 Using the SigmaWin+ 9-9
9.3.3 Using the Analog Monitors 9-10

9.4 Monitoring Product Life 9-15

9.4.1 Items That You Can Monitor 9-15
9.4.2 Operating Procedure 9-16
9.4.3 Preventative Maintenance 9-17

9.5 Alarm Tracing 9-18

9.5.1 Data for Which Alarm Tracing Is Performed 9-18
9.5.2 Applicable Tools 9-18

9.1 Monitoring Product Information

9.1.1 Items That You Can Monitor

The items that you can monitor in the SigmaWin+ Product Information Window are listed below.

Monitor Items	
Information on SERVOPACKs	• Model/Type • Serial Number • Manufacturing Date • Software version (SW Ver.) • Remarks
Information on Servomotors	• Model/Type • Serial Number • Manufacturing Date • Remarks
Information on Encoders	• Model/Type • Serial Number • Manufacturing Date • Software version (SW Ver.) • Remarks
Information on Option Modules	• Model/Type • Serial Number • Manufacturing Date • Software version (SW Ver.) • Remarks

9.1.2 Operating Procedures

Use the following procedure to display the Servo Drive product information.

- Select ***Read Product Information*** in the Menu Dialog Box of the SigmaWin+. The Read Product Information Window will be displayed.

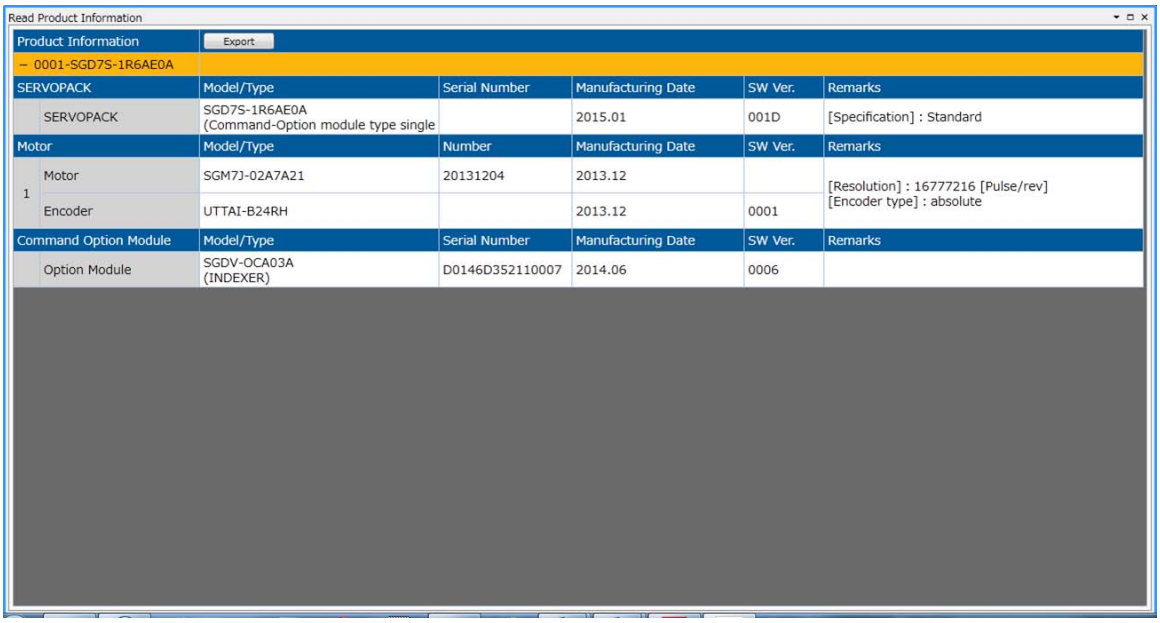

Information

- With the Panel Operator, you can use Fn011 and Fn012 to monitor this information.
  Refer to the following sections for the differences in the monitor items compared with the SigmaWin+.
  ☞ *13.4.16 Display Servomotor Model (Fn011)* on page 13-24
  ☞ *13.4.17 Display Software Version (Fn012)* on page 13-26
- With the Digital Operator, you can use Fn011, Fn012, and Fn01E to monitor this information.
  Refer to the following manual for the differences in the monitor items compared with the SigmaWin+.
  📖 Σ-7-Series Digital Operator Operating Manual (Manual No.: SIEP S800001 33)

9.2 Monitoring SERVOPACK Status

9.2.1 Servo Drive Status

Use the following procedure to display the Servo Drive status.

- Start the SigmaWin+. The Servo Drive status will be automatically displayed when you go online with a SERVOPACK.

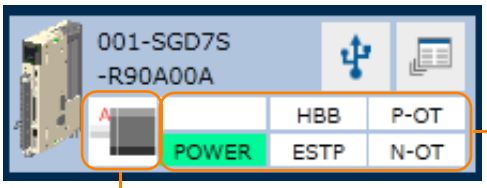

The Servo Drive status is displayed.

The Servomotor type is displayed.

9.2.2 Monitoring Operation, Status, and I/O

Items That You Can Monitor

The items that you can monitor on the Operation Pane, Status Pane, and I/O Pane are listed below.

- Operation Pane

Monitor Items	
• Motor Speed • Speed Reference • Internal Torque Reference • Angle of Rotation 1 (Number of encoder pulses from origin within one encoder rotation) • Angle of Rotation 2 (angle from origin within one encoder rotation) • Input Reference Pulse Speed • Deviation Counter (Position Deviation) • Cumulative Load • Regenerative Load • Power Consumption	• Consumed Power • Cumulative Power Consumption • DB Resistor Consumption Power • Absolute Encoder Multiturn Data • Absolute Encoder Position within One Rotation • Absolute Encoder (Lower) • Absolute Encoder (Upper) • Input Reference Pulse Counter • Feedback Pulse Counter • Fully Closed Feedback Pulse Counter • Total Operating Time

- Status Pane

Monitor Items	
• Main Circuit • Encoder (PGRDY) • Motor Power (Request) • Motor Power ON • Dynamic Brake (DB) • Rotation (Movement) Direction • Mode Switch • Speed Reference (V-Ref) • Torque Reference (T-Ref)	• Position Reference (PULS) • Position Reference Direction • Clear Signal (CLR) • Surge Current Limiting Resistor Short Relay • Regenerative Transistor • Regenerative Error Detection • AC Power ON • Overcurrent • Origin Not Passed

- I/O Pane

Monitor Items			
Input Signal Status	• /S-ON (Servo ON Input Signal) • /P-CON (Proportional Control Input Signal) • P-OT (Forward Drive Prohibit Input Signal) • N-OT (Reverse Drive Prohibit Input Signal) • /P-CL (Forward External Torque Limit Signal) • /N-CL (Reverse External Torque Limit Signal) • /ALM-RST (Alarm Reset Input Signal) • SEN (Absolute Data Request Input Signal) • /SPD-D (Motor Direction Signal) • /SPD-A (Internal Set Speed Selection Input Signal) • /SPD-B (Internal Set Speed Selection Input Signal) • /C-SEL (Control Selection Input Signal) • /ZCLAMP (Zero Clamping Input Signal) • /INHIBIT (Reference Pulse Inhibit Input Signal) • /G-SEL (Gain Selection Input Signal) • /P-DET (Polarity Detection Input Signal) • PULS (Pulse Reference Input Signal) • SIGN (Sign Reference Input Signal) • CLR (Position Deviation Clear Input Signal) • /PSEL (Reference Pulse Input Multiplication Input Signal) • FSTP (Forced Stop Input Signal)	Output Signal Status	• ALM (Servo Alarm Output Signal) • /COIN (Positioning Completion Output Signal) • /V-CMP (Speed Coincidence Detection Output Signal) • /TGON (Rotation Detection Output Signal) • /S-RDY (Servo Ready Output Signal) • /CLT (Torque Limit Detection) Signal • /VLT (Speed Limit Detection Output Signal) • /BK (Brake Output Signal) • /WARN (Warning Output Signal) • /NEAR (Near Output Signal) • ALO1 (Alarm Code Output Signal) • ALO2 (Alarm Code Output Signal) • ALO3 (Alarm Code Output Signal) • PAO (Encoder Divided Pulse Output Phase A Signal) • PBO (Encoder Divided Pulse Output Phase B Signal) • PCO (Encoder Divided Pulse Output Phase C Signal) • /PSELA (Reference Pulse Input Multiplication Switching Output Signal) • /PM (Preventative Maintenance Output Signal)

Operating Procedure

Use the following procedure to display the Operation Monitor, Status Monitor, and I/O Monitor for the SERVOPACK.

- Select **Monitor** in the SigmaWin+ Menu Dialog Box.
  The Operation Pane, Status Pane, and I/O Pane will be displayed in the Monitor Window.

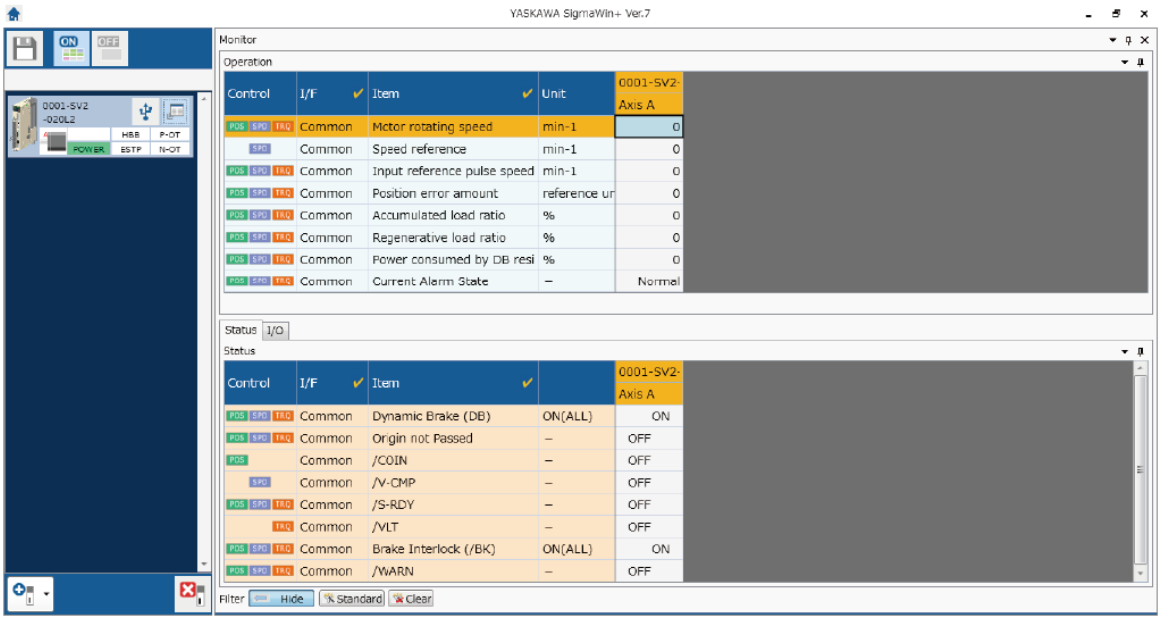

Information You can flexibly change the contents that are displayed in the Monitor Window. Refer to the following manual for details.
Engineering Tool SigmaWin+ Operation Manual (Manual No.: SIET S800001 34)

9.2.3 I/O Signals Status Monitor

Use the following procedure to check the status of the I/O signals.

1. Click the Servo Drive Button in the workspace of the Main Window of the SigmaWin+.

2. Select **I/O Signal Allocation** in the Menu Dialog Box.
   The I/O Signal Allocation Window will be displayed.

3. Click the **Input Signal** Tab.

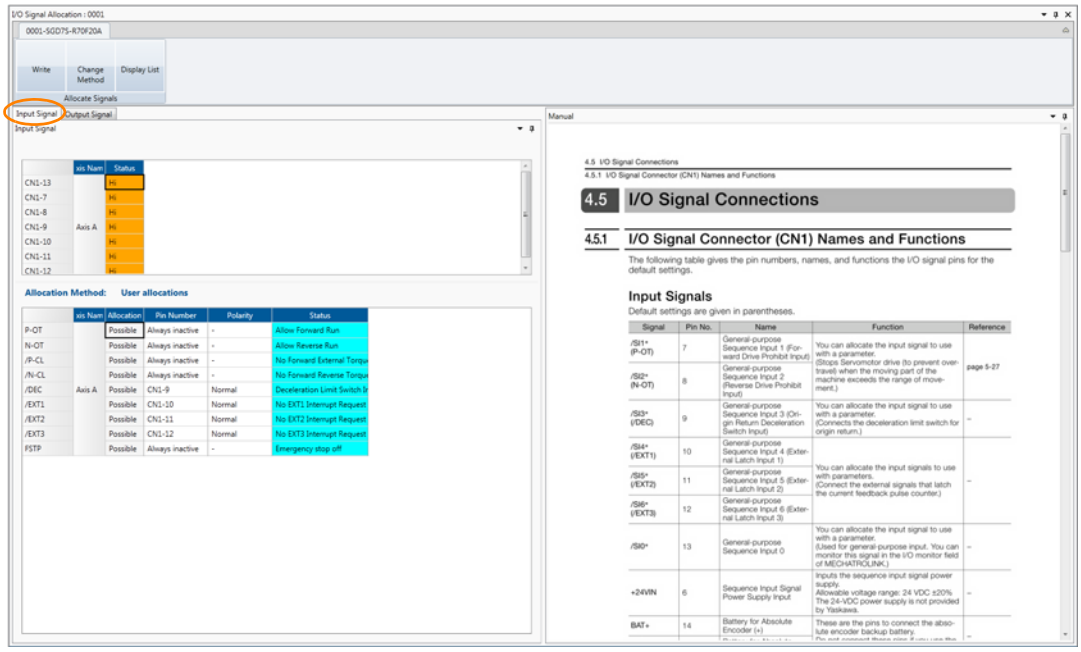

Check the status of the input signals.

4. Click the **Output Signal** Tab.

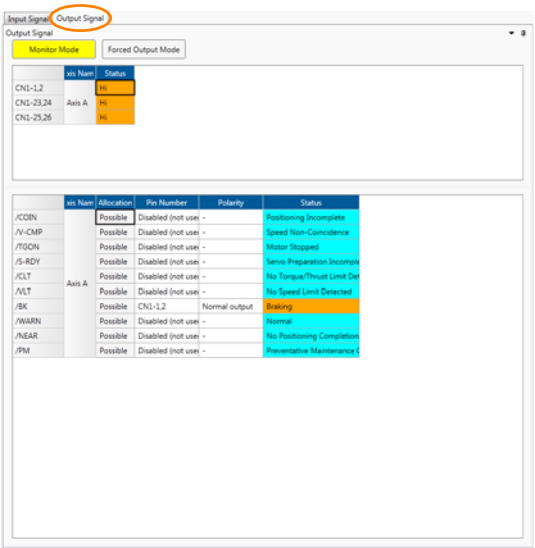

Check the status of the output signals.

Information

You can also use the above window to check wiring.

- Checking Input Signal Wiring
  Change the signal status at the host controller. If the input signal status on the window changes accordingly, then the wiring is correct.
- Checking Output Signal Wiring
  Click the **Force Output Mode** Button. This will force the output signal status to change. If the signal status at the host controller changes accordingly, then the wiring is correct.
  You cannot use the **Force Output Mode** Button while the servo is ON.

For details, refer to the following manual.

AC Servo Drive Engineering Tool SigmaWin+ Operation Manual (Manual No.: SIET S800001 34)

9.3 Monitoring Machine Operation Status and Signal Waveforms

To monitor waveforms, use the SigmaWin+ trace function or a measuring instrument, such as a memory recorder.

9.3.1 Items That You Can Monitor

You can use the SigmaWin+ or a measuring instrument to monitor the shaded items in the following block diagram.

- Rotary Servomotors

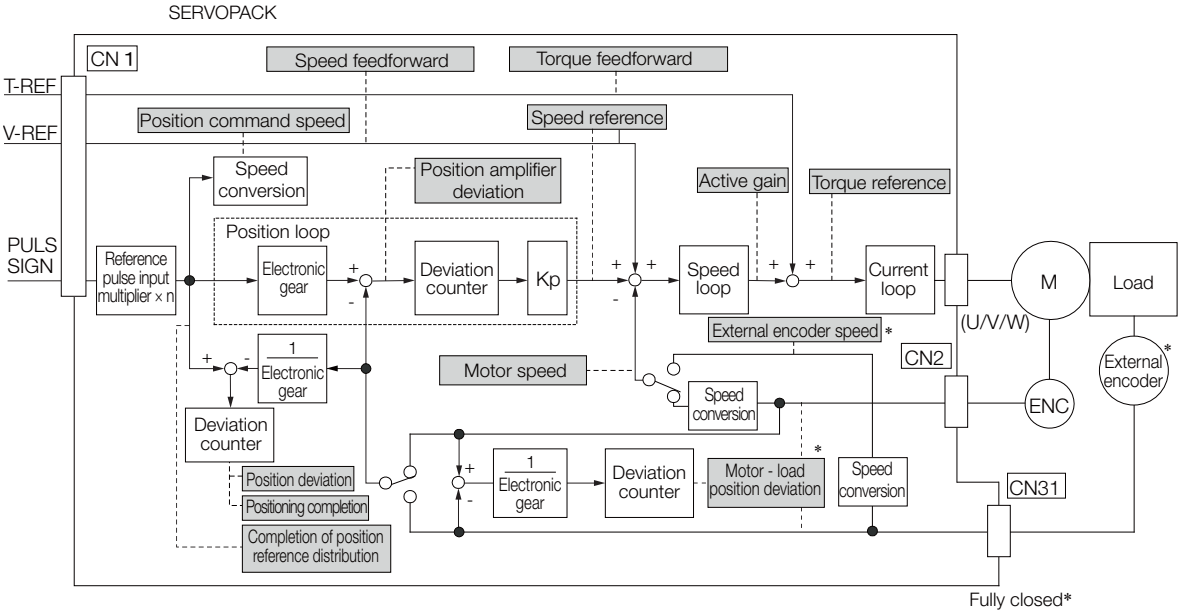

* This speed is available when fully-closed loop control is being used.

- Linear Servomotors

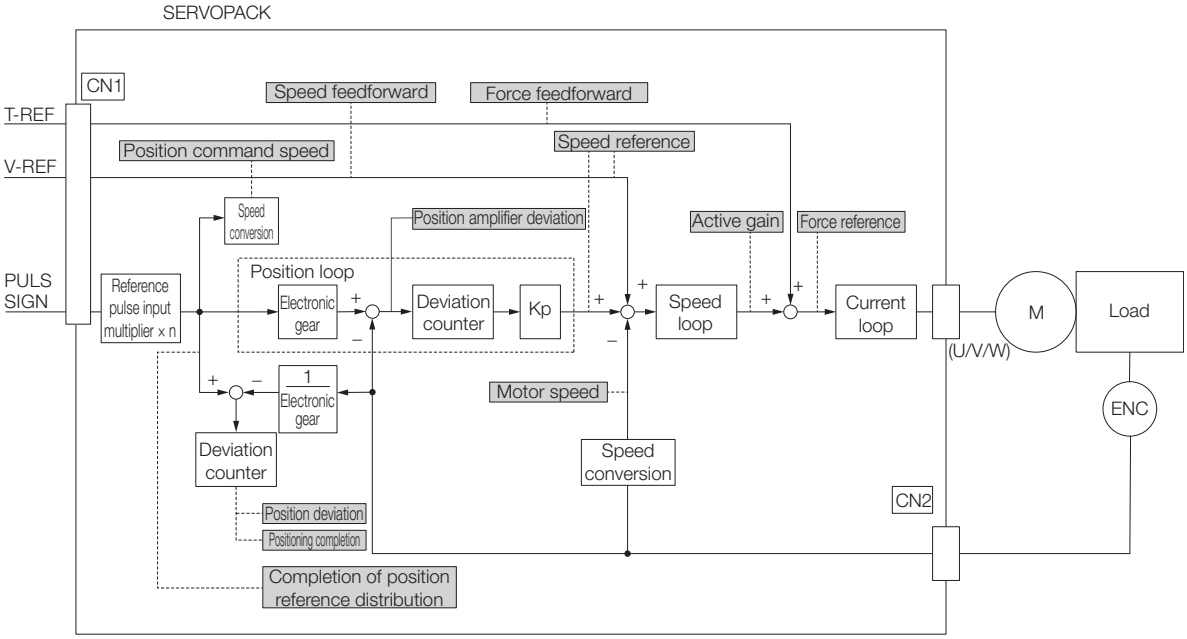

9.3.2 Using the SigmaWin+

This section describes how to trace data and I/O with the SigmaWin+.

Refer to the following manual for detailed operating procedures for the SigmaWin+.

Engineering Tool SigmaWin+ Operation Manual (Manual No.: SIET S800001 34)

Operating Procedure

1. Click the Servo Drive Button in the workspace of the Main Window of the SigmaWin+.

2. Select **Trace** in the Menu Dialog Box.
   The Trace Dialog Box will be displayed.

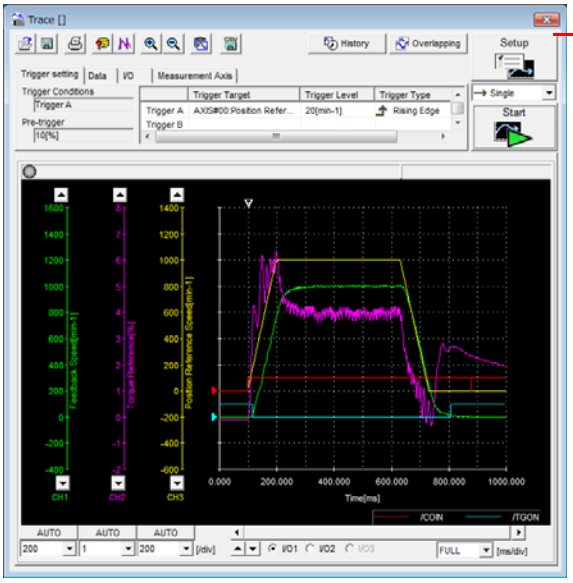

Click this button to display the Trace Setting Dialog Box shown below, and set the data to trace and the trace conditions.

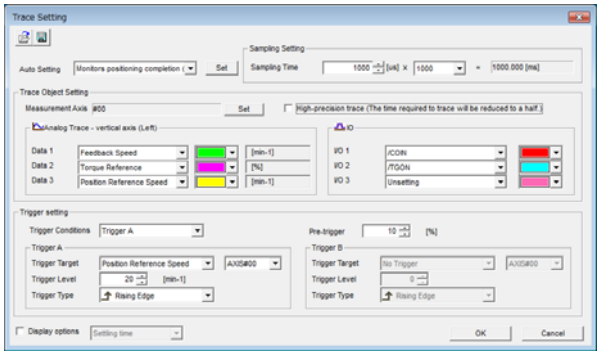

Trace Objects

You can trace the following items.

- Data Tracing

Trace Objects	
• Torque Reference • Feedback Speed • Reference Speed • Position Reference Speed • Position Error (Deviation) • Position Amplifier Error (Deviation)	• Motor - Load Position Deviation • Speed Feedforward • Torque Feedforward • Effective (Active) Gain • Main Circuit DC Voltage • External Encoder Speed

- I/O Tracing

Trace Objects			
Input Signals	• /S-ON (Servo ON Input Signal) • /P-CON (Proportional Control Input Signal) • P-OT (Forward Drive Prohibit Input Signal) • N-OT (Reverse Drive Prohibit Input Signal) • /ALM-RST (Alarm Reset Input Signal) • /P-CL (Forward External Torque/Force Limit Input Signal) • /N-CL (Reverse External Torque/Force Limit Input Signal) • /SPD-D (Internal Set Speed Selection Input Signal) • /SPD-A (Internal Set Speed Selection Input Signal) • /SPD-B (Internal Set Speed Selection Input Signal) • /C-SEL (Control Selection Input Signal) • /ZCLAMP (Zero Clamping Input Signal) • /INHIBIT (Reference Pulse Inhibit Input Signal) • /G-SEL (Gain Selection Input Signal) • /P-DET (Polarity Detection Input Signal) • FSTP (Forced Stop Input Signal) • SEN (Absolute Data Request Input Signal) • PULS (Pulse Reference Input Signal) • SIGN (Sign Reference Input Signal) • CLR (Position Deviation Clear Input Signal) • /PSEL (Reference Pulse Input Multiplication Input Signal) • /HWBB1 (Hard Wire Base Block Input 1 Signal) • /HWBB2 (Hard Wire Base Block Input 2 Signal)	Output Signals	• ALM (Servo Alarm Output Signal) • /COIN (Positioning Completion Output Signal) • /V-CMP (Speed Coincidence Detection Output Signal) • /TGON (Rotation Detection Output Signal) • /S-RDY (Servo Ready Output Signal) • /CLT (Torque Limit Detection Output Signal) • /VLT (Speed Limit Detection Output Signal) • /BK (Brake Output Signal) • /WARN (Warning Output Signal) • /NEAR (Near Output Signal) • ALO1 (Alarm Code Output Signal) • ALO2 (Alarm Code Output Signal) • ALO3 (Alarm Code Output Signal) • PAO (Encoder Divided Pulse Output Phase A Signal) • PBO (Encoder Divided Pulse Output Phase B Signal) • PCO (Encoder Divided Pulse Output Phase C Signal) • /PSELA (Reference Pulse Input Multiplication Switching Output Signal)
		Internal Status	• ACON (Main Circuit ON Signal) • PDETCMP (Polarity Detection Completed Signal) • DEN (Position Reference Distribution Completed Signal)

9.3.3 Using the Analog Monitors

Connect a measuring instrument, such as a memory recorder, to the analog monitor connector (CN5) on the SERVOPACK to monitor analog signal waveforms. The measuring instrument is not provided by Yaskawa.

Refer to the following section for details on the connection.

☞ *4.7.3 Analog Monitor Connector (CN5)* on page 4-52

Setting the Monitor Object

Use Pn006 = n.□□XX and Pn007 = n.□□XX (Analog Monitor 1 and 2 Signal Selections) to set the items to monitor.

Line Color	Signal	Parameter Setting
White	Analog monitor 1	Pn006 = n.□□XX
Red	Analog monitor 2	Pn007 = n.□□XX
Black (2 lines)	GND	–

Parameter		Description		
		Monitor Signal	Output Unit	Remarks
Pn006 or Pn007	n.□□00 (default setting of Pn007)	Motor Speed	• Rotary Servomotor: 1 V/1,000 min^{-1} • Linear Servomotor: 1 V/1,000 mm/s	–
	n.□□01	Speed Reference	• Rotary Servomotor:1 V/1,000 min^{-1} • Linear Servomotor:1 V/1,000 mm/s	–
	n.□□02 (default setting of Pn006)	Torque Reference	1 V/100% rated torque	–
	n.□□03	Position Deviation	0.05 V/Reference unit	0 V for speed or torque control
	n.□□04	Position Amplifier Deviation	0.05 V/encoder pulse unit	Position deviation after electronic gear conversion
	n.□□05	Position Command Speed	• Rotary Servomotor:1 V/1,000 min^{-1} • Linear Servomotor:1 V/1,000 mm/s	The input reference pulses will be multiplied by n to output the position command speed.
	n.□□06	Reserved parameter (Do not change.)	–	–
	n.□□07	Motor - Load Position Deviation	0.01 V/Reference unit	–
	n.□□08	Positioning Completion	Positioning completed: 5 V Positioning not completed: 0 V	Completion is indicated by the output voltage.
	n.□□09	Speed Feedforward	• Rotary Servomotor:1 V/1,000 min^{-1} • Linear Servomotor:1 V/1,000 mm/s	–
	n.□□0A	Torque Feedforward	1 V/100% rated torque	–
	n.□□0B	Active Gain*	1st gain: 1 V 2nd gain: 2 V	The gain that is active is indicated by the output voltage.
	n.□□0C	Completion of Position Reference Distribution	Distribution completed: 5 V Distribution not completed: 0 V	Completion is indicated by the output voltage.
	n.□□0D	External Encoder Speed	1 V/1,000 min^{-1}	Value calculated at the motor shaft
	n.□□10	Main Circuit DC Voltage	1 V/100 V (main circuit DC voltage)	–

* Refer to the following section for details.
☞ *8.12.1 Gain Switching* on page 8-66

Changing the Monitor Factor and Offset

You can change the monitor factors and offsets for the output voltages for analog monitor 1 and analog monitor 2. The relationships to the output voltages are as follows:

$$\text{Analog monitor 1 output voltage} = (-1) \times \left\{ \begin{array}{c}\text{Analog Monitor 1 Signal}\\ \text{Selection (Pn006 = n.□□XX)}\end{array} \times \begin{array}{c}\text{Analog Monitor 1}\\ \text{Magnification (Pn552)}\end{array} + \begin{array}{c}\text{Analog Monitor 1}\\ \text{Offset Voltage (Pn550)}\end{array} \right\}$$

$$\text{Analog monitor 2 output voltage} = (-1) \times \left\{ \begin{array}{c}\text{Analog Monitor 2 Signal}\\ \text{Selection (Pn007 = n.□□XX)}\end{array} \times \begin{array}{c}\text{Analog Monitor 2}\\ \text{Magnification (Pn553)}\end{array} + \begin{array}{c}\text{Analog Monitor 2}\\ \text{Offset Voltage (Pn551)}\end{array} \right\}$$

The following parameters are set.

Pn550	Analog Monitor 1 Offset Voltage			Speed Position Torque	
	Setting Range	Setting Unit	Default Setting	When Enabled	Classification
	-10,000 to 10,000	0.1 V	0	Immediately	Setup
Pn551	Analog Monitor 2 Offset Voltage			Speed Position Torque	
	Setting Range	Setting Unit	Default Setting	When Enabled	Classification
	-10,000 to 10,000	0.1 V	0	Immediately	Setup
Pn552	Analog Monitor 1 Magnification			Speed Position Torque	
	Setting Range	Setting Unit	Default Setting	When Enabled	Classification
	-10,000 to 10,000	×0.01	100	Immediately	Setup
Pn553	Analog Monitor 2 Magnification			Speed Position Torque	
	Setting Range	Setting Unit	Default Setting	When Enabled	Classification
	-10,000 to 10,000	×0.01	100	Immediately	Setup

Example

- Example for Setting the Item to Monitor to the Motor Speed (Pn006 = n.□□00)

When Pn552 = 100 (Setting Unit: ×0.01)

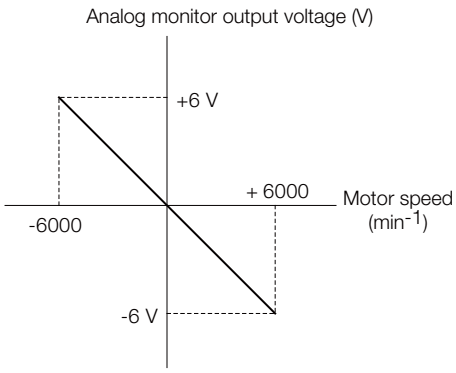

When Pn552 = 1,000 (Setting Unit: ×0.01)

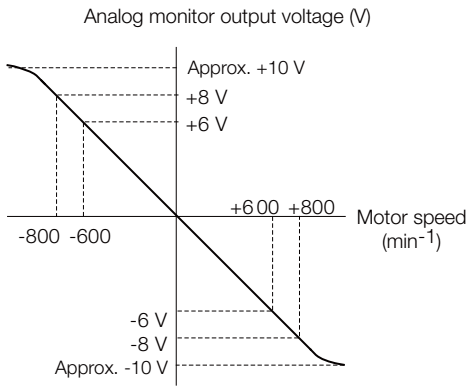

Note: The effective linearity range is ±8 V.
The resolution is 16 bits.

Adjusting the Analog Monitor Output

You can manually adjust the offset and gain for the analog monitor outputs for the torque reference monitor and motor speed monitor.

The offset is adjusted to compensate for offset in the zero point caused by output voltage drift or noise in the monitoring system.

The gain is adjusted to match the sensitivity of the measuring system.

The offset and gain are adjusted at the factory. You normally do not need to adjust them.

◆ Adjustment Example

An example of adjusting the output of the motor speed monitor is provided below.

Offset Adjustment

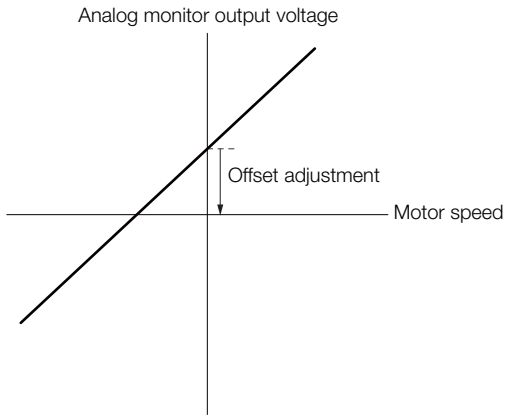

Item	Specification
Offset Adjustment Range	-2.4 V to 2.4 V
Adjustment Unit	18.9 mV/LSB

Gain Adjustment

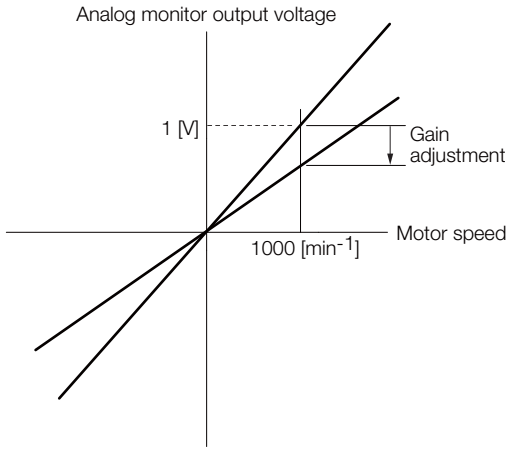

Item	Specification
Gain Adjustment Range	100 ±50%
Adjustment Unit	0.4%/LSB

The gain adjustment range is made using a 100% output value (gain adjustment of 0) as the reference value with an adjustment range of 50% to 150%.
A setting example is given below.

- Setting the Adjustment Value to -125
  100 + (-125 × 0.4) = 50 [%]
  Therefore, the monitor output voltage goes to 50% of the original value.
- Setting the Adjustment Value to 125
  100 + (125 × 0.4) = 150 [%]
  Therefore, the monitor output voltage goes to 150% of the original value.

Information

- The adjustment values do not use parameters, so they will not change even if the parameter settings are initialized.
- Adjust the offset with the measuring instrument connected so that the analog monitor output value goes to zero. The following setting example achieves a zero output.
  - While power is not supplied to the Servomotor, set the monitor signal to the torque reference.
  - In speed control, set the monitor signal to the position deviation.

◆ Preparations

Always check the following before you adjust the analog monitor output.

- The parameters must not be write prohibited.

◆ Applicable Tools

You can use the following tools to adjust analog monitor outputs.

- Offset Adjustment

Tool	Fn No./Function Name	Operating Procedure Reference
Panel Operator	Fn00C	☞ *13.4.11 Adjust Analog Monitor Output Offset (Fn00C)* on page 13-20
Digital Operator	Fn00C	📖 Σ-7-Series Digital Operator Operating Manual (Manual No.: SIEP S800001 33)
SigmaWin+	***Others - Adjust the Analog Monitor Output***	☞ ◆ *Operating Procedure* on page 9-14

- Gain Adjustment

Tool	Fn No./Function Name	Operating Procedure Reference
Panel Operator	Fn00D	*13.4.12 Adjust Analog Monitor Output Gain (Fn00D)* on page 13-20
Digital Operator	Fn00D	Σ-7-Series Digital Operator Operating Manual (Manual No.: SIEP S800001 33)
SigmaWin+	***Others - Adjust the Analog Monitor Output***	◆ *Operating Procedure* on page 9-14

◆ Operating Procedure

Use the following procedure to adjust the analog monitor output.

1. Click the Servo Drive Button in the workspace of the Main Window of the SigmaWin+.
2. Select **Adjust the Analog Monitor Output** in the Menu Dialog Box.
   The Adjust the Analog Monitor Output Dialog Box will be displayed.
3. Click the **Zero Adjustment** or **Gain Adjustment** Tab.

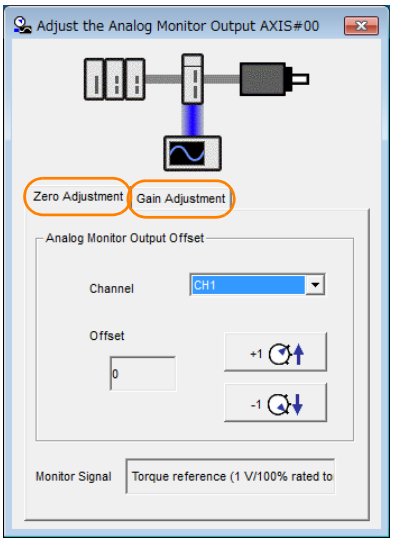

4. While watching the analog monitor, use the **+1** and **-1** Buttons to adjust the offset.
   There are two channels: CH1 and CH2. If necessary, click the down arrow on the **Channel** Box and select the channel.

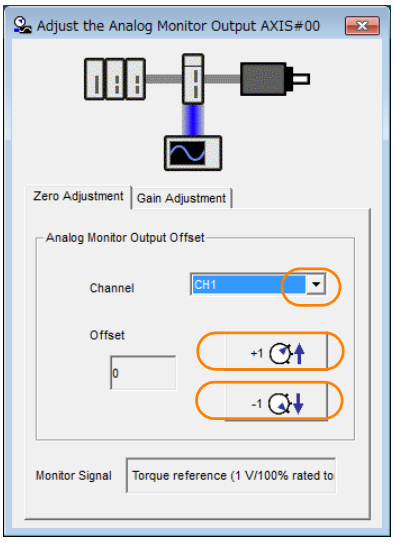

This concludes adjusting the analog monitor output.

9.4 Monitoring Product Life

9.4.1 Items That You Can Monitor

Monitor Item	Description
SERVOPACK Installation Environment	The operating status of the SERVOPACK in terms of the installation environment is displayed. Implement one or more of the following actions if the monitor value exceeds 100%. • Lower the surrounding temperature. • Decrease the load.
Servomotor Installation Environment	The operating status of the SERVOPACK in terms of the installation environment is displayed. Implement one or more of the following actions if the monitor value exceeds 100%. • Lower the surrounding temperature. • Decrease the load.
Built-in Fan Service Life Prediction	The unused status of the SERVOPACK is treated as the 100% value. The value decreases each time the main circuit power supply is turned ON and each time the servo is turned OFF. Use a monitor value of 0% as a guideline for the replacement period. Refer to the following section for part replacement guidelines. ☞ *12.1.2 Guidelines for Part Replacement* on page 12-2
Capacitor Service Life Prediction	The unused status of the SERVOPACK is treated as the 100% value. The value decreases each time the main circuit power supply is turned ON and each time the servo is turned OFF. Use a monitor value of 0% as a guideline for the replacement period. Refer to the following section for part replacement guidelines. ☞ *12.1.2 Guidelines for Part Replacement* on page 12-2
Surge Prevention Circuit Service Life Prediction	The unused status of the SERVOPACK is treated as the 100% value. The value decreases each time the main circuit power supply is turned ON and each time the servo is turned OFF. Use a monitor value of 0% as a guideline for the replacement period. Refer to the following section for part replacement guidelines. ☞ *12.1.2 Guidelines for Part Replacement* on page 12-2
Dynamic Brake Circuit Service Life Prediction	The unused status of the SERVOPACK is treated as the 100% value. The value decreases each time the main circuit power supply is turned ON and each time the servo is turned OFF. Use a monitor value of 0% as a guideline for the replacement period. Refer to the following section for part replacement guidelines. ☞ *12.1.2 Guidelines for Part Replacement* on page 12-2

9.4.2 Operating Procedure

Use the following procedure to display the installation environment and service life prediction monitor dialog boxes.

1. Click the Servo Drive Button in the workspace of the Main Window of the SigmaWin+.

2. Select **Life Monitor** in the Menu Dialog Box.
   The Life Monitor Dialog Box will be displayed.

Information With the Panel Operator or Digital Operator, you can use Un025 to Un02A to monitor this information.

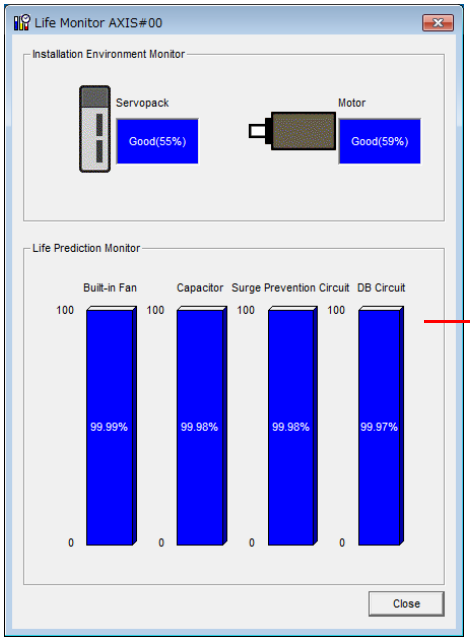

A value of 100% indicates that the SERVOPACK has not yet been used. The percentage decreases as the SERVOPACK is used and reaches 0% when it is time to replace the SERVOPACK.

9.4.3 Preventative Maintenance

You can use the following functions for preventative maintenance.

- Preventative maintenance warnings
- /PM (Preventative Maintenance Output) signal

The SERVOPACK can notify the host controller when it is time to replace any of the main parts.

Preventative Maintenance Warning

An A.9b0 warning (Preventative Maintenance Warning) is detected when any of the following service life prediction values drops to 10% or less: SERVOPACK built-in fan life, capacitor life, inrush current limiting circuit life, and dynamic brake circuit life. You can change the setting of Pn00F = n.□□□X to enable or disable these warnings.

Parameter		Description	When Enabled	Classification
Pn00F	n.□□□0 (default setting)	Do not detect preventative maintenance warnings.	After restart	Setup
	n.□□□1	Detect preventative maintenance warnings.		

/PM (Preventative Maintenance Output) Signal

The /PM (Preventative Maintenance Output) signal is output when any of the following service life prediction values reaches 10% or less: SERVOPACK built-in fan life, capacitor life, inrush current limiting circuit life, and dynamic brake circuit life. The /PM (Preventative Maintenance Output) signal must be allocated.

Even if detection of preventive maintenance warnings is disabled (Pn00F = n.□□□0), the /PM signal will still be output as long as it is allocated.

Classification	Signal	Connector Pin No.	Signal Status	Description
Output	/PM	Must be allocated.	ON (closed)	One of the following service life prediction values reached 10% or less: SERVOPACK built-in fan life, capacitor life, inrush current limiting circuit life, and dynamic brake circuit life.
			OFF (open)	All of the following service life prediction values are greater than 10%: SERVOPACK built-in fan life, capacitor life, inrush current limiting circuit life, and dynamic brake circuit life.

Note: You must allocate the /PM signal to use it. Use Pn514 = n.□X□□ (/PM (Preventative Maintenance Output) Signal Allocation) to allocate the signal to connector pins. Refer to the following section for details.
☞ *6.1.2 Output Signal Allocations* on page 6-8

9.5 Alarm Tracing

Alarm tracing records data in the SERVOPACK from before and after an alarm occurs. This data helps you to isolate the cause of the alarm.

You can display the data recorded in the SERVOPACK as a trace waveform on the SigmaWin+.

Information
- Alarms that occur when the power supply is turned ON are not recorded.
- Alarms that occur during the recording of alarm trace data are not recorded.
- Alarms that occur while utility functions are being executed are not recorded.
- Alarms that occur while the data tracing function of the SigmaWin+ is being executed are not recorded.

9.5.1 Data for Which Alarm Tracing Is Performed

Two types of data are recorded for alarm tracing: numeric data and I/O signal ON/OFF data.

Numeric Data
Torque reference
Feedback speed
Reference speed
Position reference speed
Position deviation
Motor-load position deviation
Main circuit bus voltage

ON/OFF Data
ALM
Servo ON command (/S-ON)
Proportional control command (/P-CON)
Forward torque command (/P-CL)
Reverse torque command (/N-CL)
G-SEL1 signal (/G-SEL1)
ACON

9.5.2 Applicable Tools

The following table lists the tools that you can use to perform alarm tracing.

Tool	Fn No./Function Name	Operating Procedure Reference
Panel Operator	You cannot display alarm tracing data from the Panel Operator.	
Digital Operator	You cannot display alarm tracing data from the Digital Operator.	
SigmaWin+	***Troubleshooting - Alarm Tracing***	Engineering Tool SigmaWin+ Operation Manual (Manual No.: SIET S800001 34)

Fully-Closed Loop Control

10

This chapter provides detailed information on performing fully-closed loop control with the SERVOPACK.

10.1 Fully-Closed System 10-2

10.2 SERVOPACK Commissioning Procedure . . 10-3

10.3 Parameter Settings for Fully-Closed Loop Control . . 10-5

10.3.1 Control Block Diagram for Fully-Closed Loop Control 10-5
10.3.2 Setting the Motor Direction and the Machine Movement Direction 10-6
10.3.3 Setting the Number of External Encoder Scale Pitches 10-7
10.3.4 Setting the PAO, PBO, and PCO (Encoder Divided Pulse Output) Signals 10-7
10.3.5 External Absolute Encoder Data Reception Sequence 10-8
10.3.6 Electronic Gear Setting 10-8
10.3.7 Alarm Detection Settings 10-8
10.3.8 Analog Monitor Signal Settings 10-10
10.3.9 Setting to Use an External Encoder for Speed Feedback 10-10

10.1 Fully-Closed System

With a fully-closed system, an externally installed encoder is used to detect the position of the controlled machine and the machine's position information is fed back to the SERVOPACK. High-precision positioning is possible because the actual machine position is fed back directly. With a fully-closed system, looseness or twisting of mechanical parts may cause vibration or oscillation, resulting in unstable positioning.

Refer to the following manual for details on Fully-closed Modules.

Σ-7-Series Peripheral Device Selection Manual (Manual No.: SIEP S800001 32)

The following figure shows an example of the system configuration.

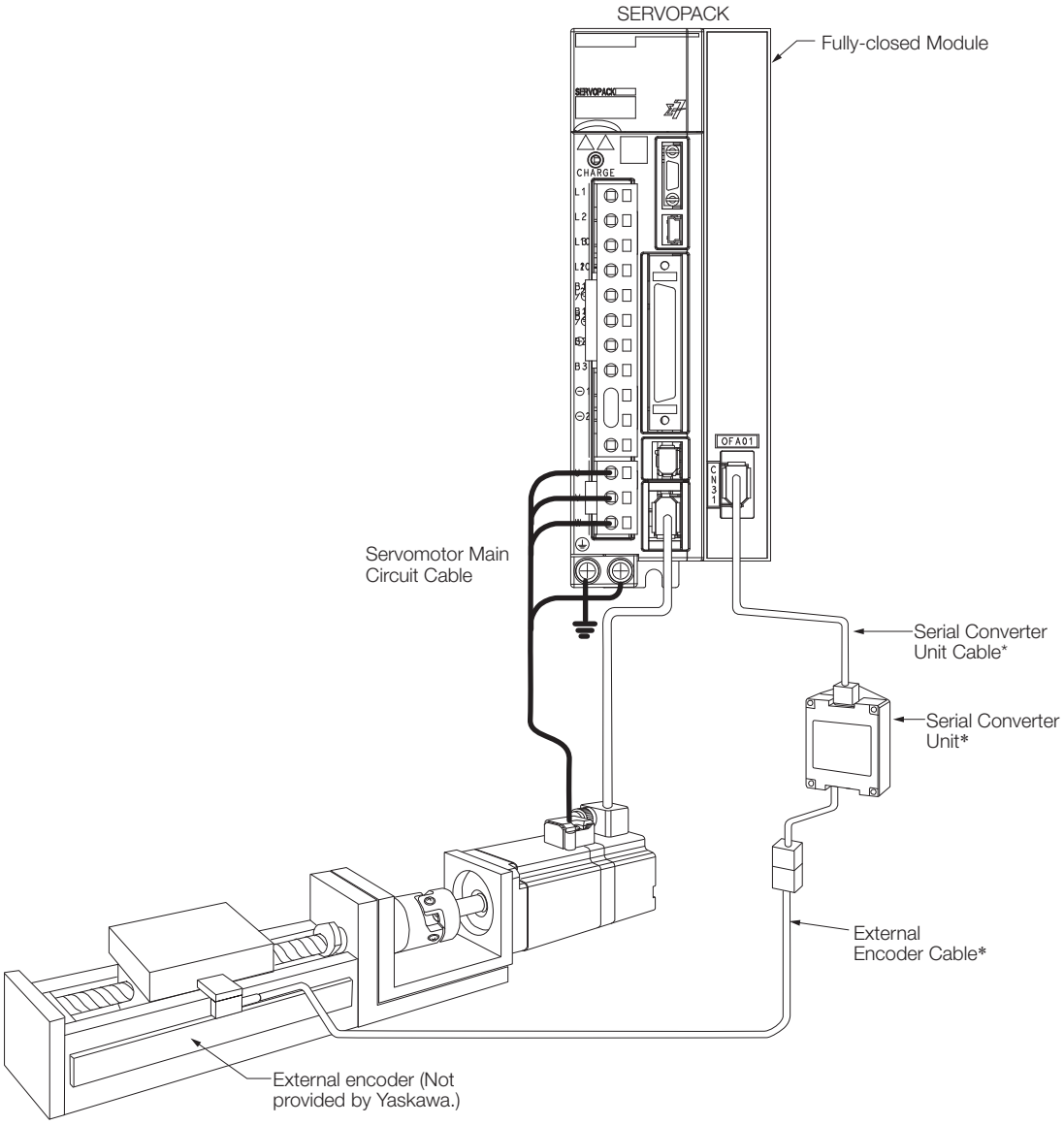

* The connected devices and cables depend on the type of external linear encoder that is used.

Note: Refer to the following section for details on connections that are not shown above, such as connections to power supplies and peripheral devices.

2.4 Examples of Standard Connections between SERVOPACKs and Peripheral Devices on page 2-27

10.2 SERVOPACK Commissioning Procedure

First, confirm that the SERVOPACK operates correctly with semi-closed loop control, and then confirm that it operates correctly with fully-closed loop control.
The commissioning procedure for the SERVOPACK for fully-closed loop control is given below.

Step	Description	Operation	Required Parameter Settings	Controlling Device
1	Check operation of the entire sequence with semi-closed loop control and without a load. Items to Check • Power supply circuit wiring • Servomotor wiring • Encoder wiring • Wiring of I/O signal lines from the host controller • Servomotor rotation direction, motor speed, and multiturn data • Operation of safety mechanisms, such as the brakes and the overtravel mechanisms	Set the parameters so that the SERVOPACK operates correctly in semi-closed loop control without a load and check the following points. Set Pn002 to n.0□□□ to specify semi-closed loop control. • Are there any errors in the SERVOPACK? • Does jogging function correctly when you operate the SERVOPACK without a load? • Do the I/O signals turn ON and OFF correctly? • Is power supplied to the Servomotor when the /S-ON (Servo ON) signal is input? • Does the Servomotor operate correctly when a position reference is input by the host controller?	• Pn000 (Basic Function Selections 0) • Pn001 (Application Function Selections 1) • Pn002 = n.X□□□ (External Encoder Usage) • Pn20E (Electronic Gear Ratio (Numerator)) • Pn210 (Electronic Gear Ratio (Denominator)) • Pn50A, Pn50B, Pn511, Pn515, and Pn516 (Input Signal Selections) • Pn50E, Pn50F, Pn510, Pn514, and Pn517 (Output Signal Selections)	SERVOPACK or host controller
2	Check operation with the Servomotor connected to the machine with semi-closed loop control. Items to Check • Initial response of the system connected to the machine • Movement direction, travel distance, and movement speed as specified by the references from the host controller	Connect the Servomotor to the machine. Set the moment of inertia ratio in Pn103 using autotuning without a host reference. Check that the machine's movement direction, travel distance, and movement speed agree with the references from the host controller.	Pn103 (Moment of Inertia Ratio)	Host controller
3	Check the external encoder. Items to Check Is the signal from the external encoder received correctly?	Set the parameters related to fully-closed loop control and move the machine with your hand without turning ON the power supply to the Servomotor. Check the following status with the Panel Operator, Digital Operator, or SigmaWin+. • Does the fully-closed feedback pulse counter count up when the Servomotor moves in the forward direction? • Is the travel distance of the machine visually about the same as the amount counted by the fully-closed feedback pulse counter? Note: The unit for the fully-closed feedback pulse counter is pulses, which is equivalent to the external encoder sine wave pitch.	• Pn002 = n.X□□□ (External Encoder Usage) • Pn20A (Number of External Encoder Scale Pitches) • Pn20E (Electronic Gear Ratio (Numerator)) • Pn210 (Electronic Gear Ratio (Denominator)) • Pn281 (Encoder Output Resolution) • Pn51B (Motor-Load Position Deviation Overflow Detection Level) • Pn522 (Positioning Completed Width) • Pn52A (Multiplier per Fully-closed Rotation)	–

Continued on next page.

Continued from previous page.

Step	Description	Operation	Required Parameter Settings	Controlling Device
4	Perform a program jogging operation. Items to Check Does the fully-closed system operate correctly for the SERVOPACK without a load?	Perform a program jogging operation and confirm that the travel distance is the same as the reference value in Pn531. When you perform program jogging, start from a low speed and gradually increase the speed.	Pn530 to Pn536 (program jogging-related parameters)	SERVOPACK
5	Operate the SERVOPACK. Items to Check Does the fully-closed system operate correctly, including the host controller?	Input a position reference and confirm that the SERVOPACK operates correctly. Start from a low speed and gradually increase the speed.	–	Host controller

10.3 Parameter Settings for Fully-Closed Loop Control

This section describes the parameter settings that are related to fully-closed loop control.

Parameter to Set	Setting	Position Control	Speed Control	Torque Control	Reference
Pn000 = n.□□□X	Motor direction	√	√	√	page 10-6
Pn002 = n.X□□□	External encoder usage method	√	√	√	
Pn20A	Number of external encoder scale pitches	√	√	√	page 10-7
Pn281	Encoder divided pulse output signals (PAO, PBO, and PCO) from the SERVO-PACK	√	√	√	page 10-7
–	External absolute encoder data reception sequence	√	√	√	page 6-90
Pn20E and Pn210	Electronic gear ratio	√	–	–	page 5-46
Pn51B	Motor-load position deviation overflow detection level	√	–	–	page 10-8
Pn52A	Multiplier per fully-closed rotation	√	–	–	
Pn006/Pn007	Analog monitor signal	√	√	√	page 10-10
Pn22A = n.X□□□	Speed feedback method during fully-closed loop control	√	–	–	page 10-10

10.3.1 Control Block Diagram for Fully-Closed Loop Control

The control block diagram for fully-closed loop control is provided below.

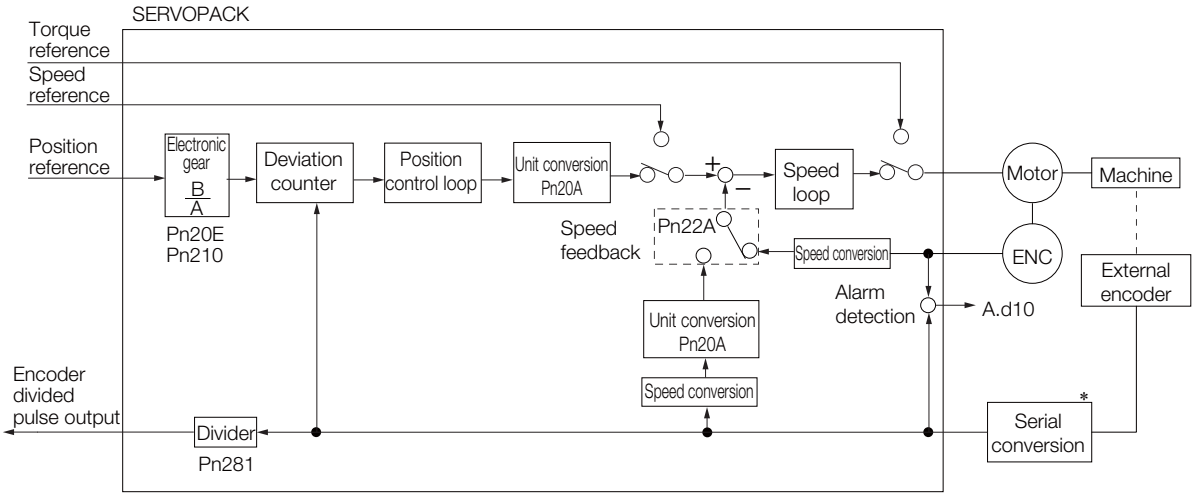

* The connected device depends on the type of external encoder.

Note: You can use either an incremental or an absolute encoder. If you use an absolute encoder, set Pn002 to n.□1□□ (Use the absolute encoder as an incremental encoder).

10.3.2 Setting the Motor Direction and the Machine Movement Direction

You must set the motor direction and the machine movement direction. To perform fully-closed loop control, you must set the motor rotation direction with both Pn000 = n.□□□X (Direction Selection) and Pn002 = n.X□□□ (External Encoder Usage).

Parameter			Pn002 = n.X□□□ (External Encoder Usage)			
			n.1□□□		n.3□□□	
Pn000 =n.□□□X (Direction Selection)	n.□□□0	Reference direction	Forward reference	Reverse reference	Forward reference	Reverse reference
		Motor direction	CCW	CW	CCW	CW
		External encoder	Forward movement	Reverse movement	Reverse movement	Forward movement
	n.□□□1	Reference direction	Forward reference	Reverse reference	Forward reference	Reverse reference
		Motor direction	CW	CCW	CW	CCW
		External encoder	Reverse movement	Forward movement	Forward movement	Reverse movement

- Phase B leads in the divided pulses for a forward reference regardless of the setting of Pn000 = n.□□□X.
- Forward direction: The direction in which the pulses are counted up.
- Reverse direction: The direction in which the pulses are counted down.

Related Parameters

◆ Pn000 = n.□□□X

Refer to the following section for details.

☞ *5.6 Motor Direction Setting* on page 5-18

◆ Pn002 = n.X□□□

When you perform fully-closed loop control, set Pn002 to n.1□□□ or n.3□□□.

Parameter		Name	Meaning	When Enabled	Classification
Pn002	n.0□□□ (default setting)	External Encoder Usage	Do not use an external encoder.	After restart	Setup
	n.1□□□		External encoder moves in forward direction for CCW motor rotation.		
	n.2□□□		Reserved parameter (Do not change.)		
	n.3□□□		External encoder moves in reverse direction for CCW motor rotation.		
	n.4□□□		Reserved parameter (Do not change.)		

Information

Determine the setting of Pn002 = n.X□□□ as described below.
- Set Pn000 to n.□□□0 (Use the direction in which the linear encoder counts up as the forward direction) and set Pn002 to n.1□□□ (The external encoder moves in the forward direction for CCW motor rotation).
- Manually rotate the motor shaft counterclockwise.
- If the fully-closed feedback pulse counter counts up, do not change the setting of Pn002 (Pn002 = n.1□□□).
- If the fully-closed feedback pulse counter counts down, set Pn002 to n.3□□□.

10.3.3 Setting the Number of External Encoder Scale Pitches

Set the number of external encoder scale pitches per Servomotor rotation in Pn20A.

Setting Example

Specifications
External encoder scale pitch: 20 μm
Ball screw lead: 30 mm

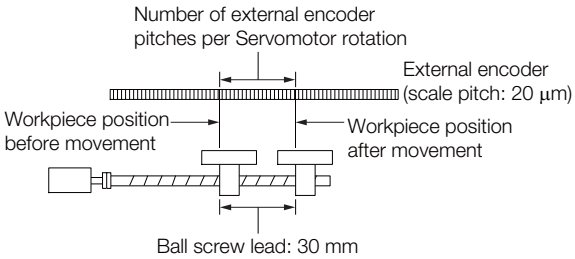

If the external encoder is connected directly to the Servomotor, the setting will be 1,500 (30 mm/0.02 mm = 1,500).

Note: 1. If there is a fraction, round off the digits below the decimal point.
2. If the number of external encoder scale pitches per Servomotor rotation is not an integer, there will be deviation in the position loop gain (Kp), feedforward, and position reference speed monitor. This is not relevant for the position loop and it therefore does not interfere with the position accuracy.

Related Parameters

Pn20A	Number of External Encoder Scale Pitches				Position
	Setting Range	Setting Unit	Default Setting	When Enabled	Classification
	4 to 1,048,576	1 scale pitch/revolution	32,768	After restart	Setup

10.3.4 Setting the PAO, PBO, and PCO (Encoder Divided Pulse Output) Signals

Set the position resolution in Pn281 (Encoder Output Resolution).

Enter the number of phase A and phase B edges for the setting.

Setting Example

Specifications
External encoder scale pitch: 20 μm
Ball screw lead: 30 mm
Speed:1,600 mm/s

If a single pulse (multiplied by 4) is output for 1 μm, the setting would be 20.

If a single pulse (multiplied by 4) is output for 0.5 μm, the setting would be 40.

The encoder divided pulse output would have the following waveform if the setting is 20.

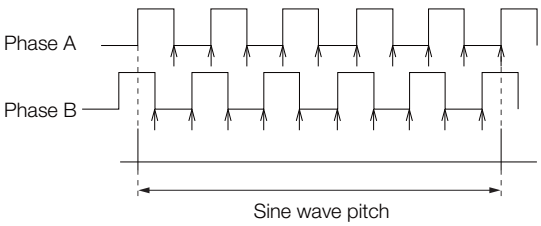

"↑" indicates the edge positions. In this example, the set value is 20 and therefore the number of edges is 20.

Note: The upper limit of the encoder signal output frequency (multiplied by 4) is 6.4 Mpps. Do not set a value that would cause the output to exceed 6.4 Mpps.
If the output exceeds the upper limit, an A.511 alarm (Encoder Output Pulse Overspeed) will be output.

Example

If the setting is 20 and the speed is 1,600 mm/s, the output frequency would be 1.6 Mpps

$$\frac{1600\ \text{mm/s}}{0.001\ \text{mm}} = 1{,}600{,}000 = 1.6\ \text{Mpps}$$

Because 1.6 Mpps is less than 6.4 Mpps, this setting can be used.

Related Parameters

Pn281	Encoder Output Resolution				Position
	Setting Range	Setting Unit	Default Setting	When Enabled	Classification
	1 to 4,096	1 edge/pitch	20	After restart	Setup

Note: 1. The maximum setting for the encoder output resolution is 4,096.
If the resolution of the external encoder exceeds 4,096, pulse output will no longer be possible at the resolution given in ■ *Feedback Resolution of Linear Encoder* on page 5-49.
2. If the setting of Pn281 exceeds the resolution of the external encoder, the A.041 alarm (Encoder Output Pulse Setting Error) will be output.

10.3.5 External Absolute Encoder Data Reception Sequence

Refer to the following section for details.

☞ *6.13.4 Reading the Position Data from the Absolute Linear Encoder* on page 6-90

With fully-closed loop control, the same sequence as for a Linear Servomotor is used.

10.3.6 Electronic Gear Setting

Refer to the following section for details.

☞ *5.16 Electronic Gear Settings* on page 5-46

With fully-closed loop control, the same setting as for a Linear Servomotor is used.

10.3.7 Alarm Detection Settings

This section describes the alarm detection settings (Pn51B and Pn52A).

Pn51B (Motor-Load Position Deviation Overflow Detection Level)

This setting is used to detect the difference between the feedback position of the Servomotor encoder and the feedback load position of the external encoder for fully-closed loop control. If the detected difference exceeds the setting, an A.d10 alarm (Motor-Load Position Deviation Overflow) will be output.

Pn51B	Motor-Load Position Deviation Overflow Detection Level				Position
	Setting Range	Setting Unit	Default Setting	When Enabled	Classification
	0 to 1,073,741,824	1 reference unit	1000	Immediately	Setup

Note: If you set this parameter to 0, A.d10 alarms will not be output and the machine may be damaged.

Pn52A (Multiplier per Fully-closed Rotation)

Set the coefficient of the deviation between the Servomotor and the external encoder per Servomotor rotation. This setting can be used to prevent the Servomotor from running out of control due to damage to the external encoder or to detect belt slippage.

◆ Setting Example

Increase the value if the belt slips or is twisted excessively.

If this parameter is set to 0, the external encoder value will be read as it is.

If you use the default setting of 20, the second rotation will start with the deviation for the first Servomotor rotation multiplied by 0.8.

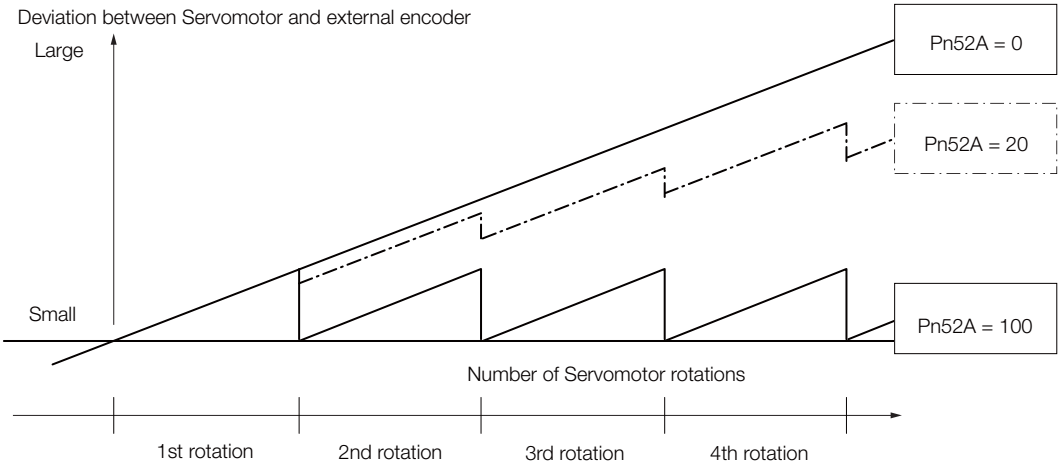

◆ Related Parameters

Pn52A	Multiplier per Fully-closed Rotation				Position
	Setting Range	Setting Unit	Default Setting	When Enabled	Classification
	0 to 100	1%	20	Immediately	Setup

10.3.8 Analog Monitor Signal Settings

You can monitor the position deviation between the Servomotor and load with an analog monitor.

Parameter		Name	Meaning	When Enabled	Classification
Pn006	n.□□07	Analog Monitor 1 Signal Selection	Position deviation between motor and load (output unit: 0.01 V/reference unit).	Immediately	Setup
Pn007	n.□□07	Analog Monitor 2 Signal Selection	Position deviation between motor and load (output unit: 0.01 V/reference unit).		

10.3.9 Setting to Use an External Encoder for Speed Feedback

For fully-closed loop control, you normally set a parameter to specify using the motor encoder speed (Pn22A = n.0□□□).
If you will use a Direct Drive Servomotor and a high-resolution external encoder, set the parameter to specify using the speed of the external encoder (Pn22A = n.1□□□).

Parameter		Meaning	When Enabled	Classification
Pn22A	n.0□□□ (default setting)	Use motor encoder speed.	After restart	Setup
	n.1□□□	Use external encoder speed.		

Note: This parameter cannot be used if Pn002 is set to n.0□□□ (Do not use external encoder).

Safety Functions

11

This chapter provides detailed information on the safety functions of the SERVOPACK.

11.1 Introduction to the Safety Functions 11-3

11.1.1 Safety Functions 11-3
11.1.2 Precautions for Safety Functions 11-3

11.2 Hard Wire Base Block (HWBB) 11-4

11.2.1 Risk Assessment 11-4
11.2.2 Hard Wire Base Block (HWBB) State 11-5
11.2.3 Resetting the HWBB State 11-5
11.2.4 Detecting Errors in HWBB Signal 11-6
11.2.5 HWBB Input Signal Specifications 11-6
11.2.6 Operation without a Host Controller 11-6
11.2.7 /S-RDY (Servo Ready Output) Signal 11-7
11.2.8 /BK (Brake Output) Signal 11-7
11.2.9 Stopping Methods 11-7
11.2.10 Settings to Clear the Position Deviation 11-8
11.2.11 ALM (Servo Alarm) Signal and ALO1, ALO2, and ALO3 (Alarm Code Output) Signals 11-8

11.3 EDM1 (External Device Monitor) 11-9

11.3.1 EDM1 Output Signal Specifications 11-9

11.4 Applications Examples for Safety Functions . .11-10

11.4.1 Connection Example 11-10
11.4.2 Failure Detection Method 11-10
11.4.3 Procedure 11-11

11.5 Validating Safety Functions 11-12

11.6 Connecting a Safety Function Device . . . 11-13

11.1 Introduction to the Safety Functions

11.1.1 Safety Functions

Safety functions are built into the SERVOPACK to reduce the risks associated with using the machine by protecting workers from the hazards of moving machine parts and otherwise increasing the safety of machine operation.
Especially when working in hazardous areas inside guards, such as for machine maintenance, the safety function can be used to avoid hazardous moving machine parts.

Refer to the following section for information on the safety function and safety parameters.
☞ *Compliance with UL Standards, EU Directives, UK Regulations, and Other Safety Standards* on page xxvi

Important

Products that display the TÜV mark on the nameplate have met the safety standards.

11.1.2 Precautions for Safety Functions

⚠ WARNING

- To confirm that the HWBB function satisfies the safety requirements of the system, you must conduct a risk assessment of the system.
  Incorrect use of the safety function may cause injury.
- The Servomotor will move if there is an external force (e.g., gravity on a vertical axis) even when the HWBB function is operating. Use a separate means, such as a mechanical brake, that satisfies the safety requirements.
  Incorrect use of the safety function may cause injury.
- While the HWBB function is operating, the Servomotor may move within an electric angle of 180° or less as a result of a SERVOPACK failure. Use the HWBB function for an application only after confirming that movement of the Servomotor will not result in a hazardous condition.
  Incorrect use of the safety function may cause injury.
- The dynamic brake and the brake signal are not safety-related elements. You must design the system so that SERVOPACK failures will not cause a hazardous condition while the HWBB function is operating.
  Incorrect use of the safety function may cause injury.
- Connect devices that satisfy the safety standards for the signals for safety functions.
  Incorrect use of the safety function may cause injury.
- The HWBB function does not shut OFF the power to the SERVOPACK or electrically isolate it. Implement measures to shut OFF the power supply to the SERVOPACK before you perform maintenance on it.
  There is a risk of electric shock.

11.2 Hard Wire Base Block (HWBB)

A hard wire base block (abbreviated as HWBB) is a safety function that is designed to shut OFF the current to the Servomotor with a hardwired circuit.
The drive signals to the Power Module that controls the motor current are controlled by the circuits that are independently connected to the two input signal channels to turn OFF the Power Module and shut OFF the motor current.

> **Important**
> For safety function signal connections, the input signal is the 0-V common and the output signal is a source output.
> This is opposite to other signals described in this manual.
> To avoid confusion, the ON and OFF status of signals for the safety function are defined as follows:
> ON: The state in which the relay contacts are closed or the transistor is ON and current flows into the signal line.
> OFF: The state in which the relay contacts are open or the transistor is OFF and no current flows into the signal line.

The input signal uses the 0-V common. The following figure shows a connection example.

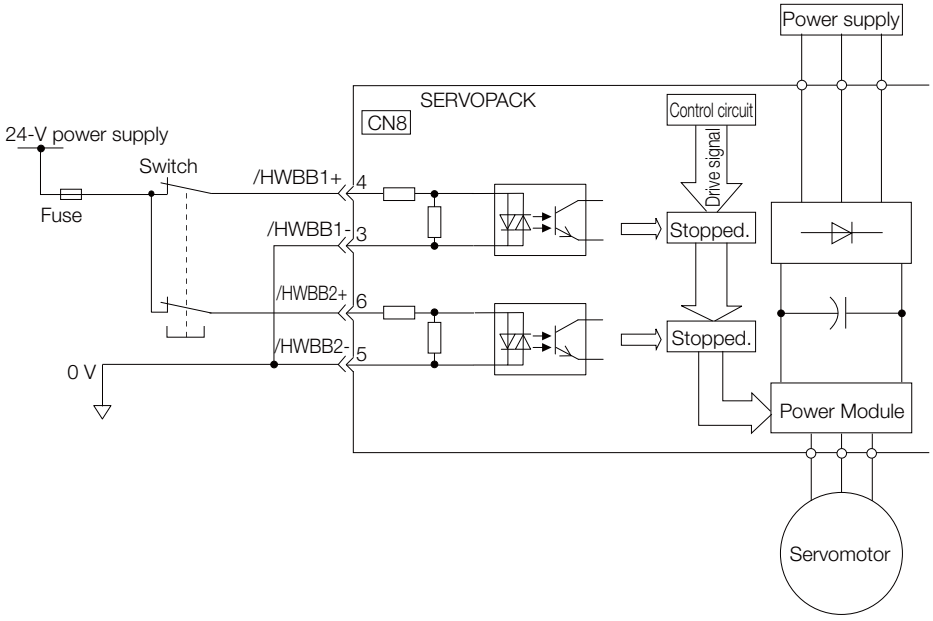

11.2.1 Risk Assessment

When using the HWBB, you must perform a risk assessment of the servo system in advance to confirm that the safety level of the standards is satisfied. Refer to the following section for details on the standards.

☞ *Compliance with UL Standards, EU Directives, UK Regulations, and Other Safety Standards* on page xxvi

Note: To meet performance level e (PLe) in EN ISO 13849-1 and SIL3 in IEC 61508, the EDM1 signal must be monitored by the host controller. If the EDM1 signal is not monitored by the host controller, the level will be safety performance level c (PLc) and SIL1.

The following hazards exist even when the HWBB is operating. These hazards must be included in the risk assessment.

- The Servomotor will move if an external force is applied to it (for example, gravity on a vertical axis). Implement measures to hold the Servomotor, such as installing a separate mechanical brake.

- If a failure occurs such as a Power Module failure, the Servomotor may move within an electric angle of 180°. Ensure safety even if the Servomotor moves.
  The rotational angle or travel distance depends on the type of Servomotor as follows:
  - Rotary Servomotor: 1/6 rotation max. (rotational angle calculated at the motor shaft)
  - Direct Drive Servomotor: 1/20 rotation max. (rotational angle calculated at the motor shaft)
  - Linear Servomotor: 50 mm max.
- The HWBB does not shut OFF the power to the SERVOPACK or electrically isolate it. Implement measures to shut OFF the power supply to the SERVOPACK before you perform maintenance on it.

11.2.2 Hard Wire Base Block (HWBB) State

The SERVOPACK will be in the following state if the HWBB operates. If the /HWBB1 or /HWBB2 signal turns OFF, the HWBB will operate and the SERVOPACK will enter a HWBB state.

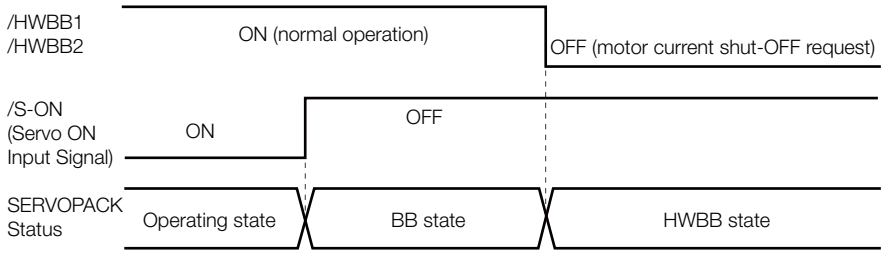

11.2.3 Resetting the HWBB State

Normally, after the /S-ON (Servo ON) signal is turned OFF and power is no longer supplied to the Servomotor, the /HWBB1 and /HWBB2 signals will turn OFF and the SERVOPACK will enter the HWBB state. If you turn ON the /HWBB1 and /HWBB2 signals in this state, the SERVOPACK will enter a base block (BB) state and will be ready to acknowledge the /S-ON signal.

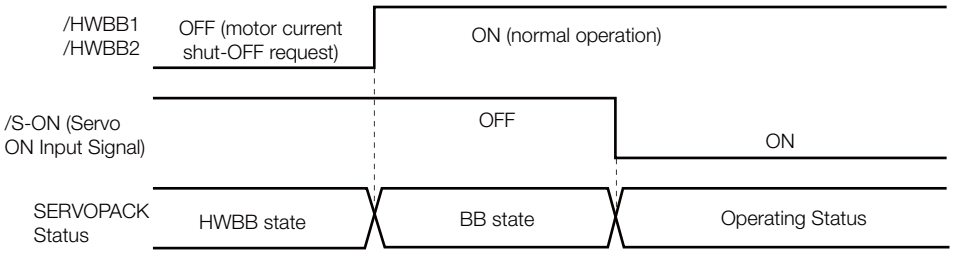

If the /HWBB1 and /HWBB2 signals are OFF and the /S-ON (Servo ON Input) signal is input, the HWBB state will be maintained even after the /HWBB1 and /HWBB2 signals are turned ON. Turn OFF the /S-ON signal to place the SERVOPACK in the BB state and then turn ON the /S-ON signal again.

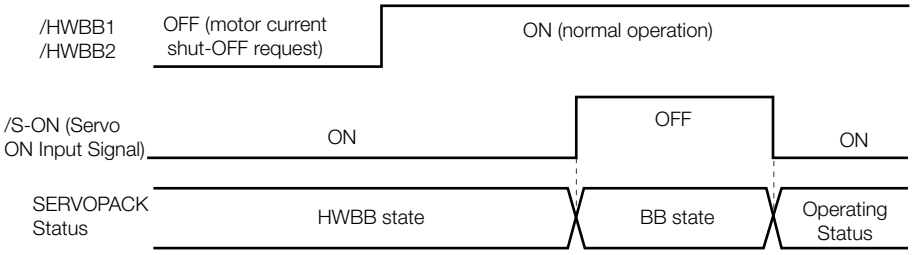

Note: 1. If the SERVOPACK is placed in the BB state while the main circuit power supply is OFF, the HWBB state will be maintained until the /S-ON (Servo ON) signal is turned OFF.
2. If the /S-ON (Servo ON) signal is set to be always active (Pn50A = n.□□7□), you cannot reset the HWBB state.
Do not set this value if you are using the HWBB.

11.2.4 Detecting Errors in HWBB Signal

If only the /HWBB1 or the /HWBB2 signal is input, an A.Eb1 alarm (Safety Function Signal Input Timing Error) will occur unless the other signal is input within 10 seconds. This makes it possible to detect failures, such as disconnection of an HWBB signal.

⚠ CAUTION

- The A.Eb1 alarm (Safety Function Signal Input Timing Error) is not a safety-related element. Keep this in mind when you design the system.

11.2.5 HWBB Input Signal Specifications

If an HWBB is requested by turning OFF the two HWBB input signal channels (/HWBB1 and /HWBB2), the power supply to the Servomotor will be turned OFF within 8 ms.

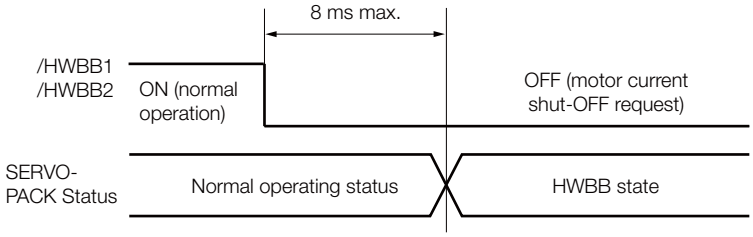

Note: 1. The OFF status is not recognized if the OFF interval of the /HWBB1 or /HWBB2 signal is 0.5 ms or shorter.
2. You can check the status of the input signals by using monitor displays.

11.2.6 Operation without a Host Controller

The HWBB will operate even for operation without a host controller.

However, if the HWBB operates during execution of the following functions, leave the execution mode for the function and then enter it again to restart operation. Operation will not be restarted simply by turning OFF the /HWBB1 and /HWBB2 signals.

Applicable Functions	Resetting the HWBB State
• Jogging • Origin search • Program jogging • Automatic adjustment without host reference • Easy FFT • Adjustment of motor current detection signal offset	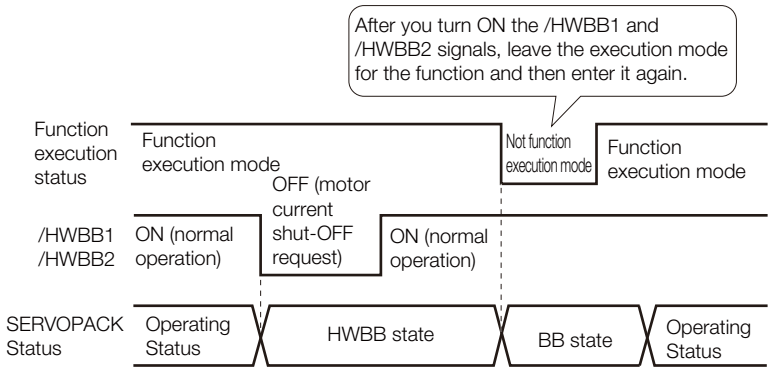

11.2.7 /S-RDY (Servo Ready Output) Signal

The /S-ON (Servo ON) signal will not be acknowledged in the HWBB state. Therefore, the Servo Ready Output Signal will turn OFF. The Servo Ready Output Signal will turn ON if both the /HWBB1 and /HWBB2 signals are ON and the /S-ON signal is turned OFF (BB state).

An example is provided below for when the main circuit power supply is ON and the SEN signal turns ON when there is no servo alarm. (An absolute encoder is used in this example.)

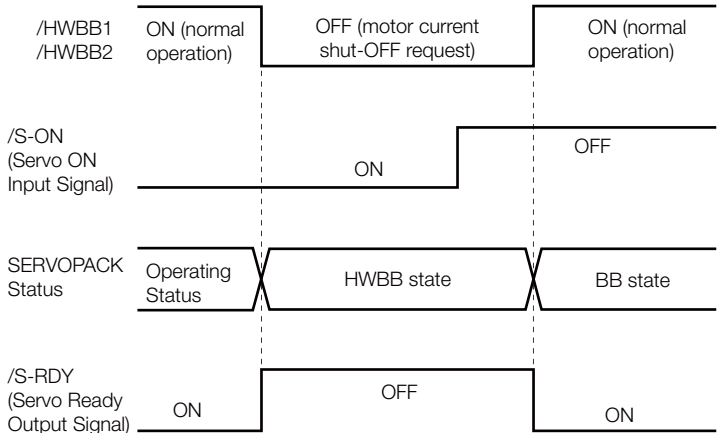

11.2.8 /BK (Brake Output) Signal

If the HWBB operates when the /HWBB1 or /HWBB2 signal is OFF, the /BK (Brake) signal will turn OFF. At that time, the setting in Pn506 (Brake Reference - Servo OFF Delay Time) will be disabled. Therefore, the Servomotor may be moved by external force until the actual brake becomes effective after the /BK signal turns OFF.

⚠ CAUTION

- The brake signal is not a safety-related element. You must design the system so that a hazardous condition does not occur even if the brake signal fails in the HWBB state. Also, if a Servomotor with a Brake is used, keep in mind that the brake in the Servomotor is used only to prevent the moving part from being moved by gravity or an external force and it cannot be used to stop the Servomotor.

11.2.9 Stopping Methods

If the /HWBB1 or /HWBB2 signal turns OFF and the HWBB operates, the Servomotor will stop according to the stop mode that is set for stopping the Servomotor when the servo turns OFF (Pn001 = n.□□□X). However, if the dynamic brake is enabled (Pn001 = n.□□□0 or n.□□□1), observe the following precautions.

⚠ CAUTION

- The dynamic brake is not a safety-related element. You must design the system so that a hazardous condition does not occur even if the Servomotor coasts to a stop in the HWBB state. Normally, we recommend that you use a sequence that returns to the HWBB state after stopping for a reference.
- If the application frequently uses the HWBB, stopping with the dynamic brake may result in the deterioration of elements in the SERVOPACK. To prevent internal elements from deteriorating, use a sequence in which the HWBB state is returned to after the Servomotor has come to a stop.

11.2.10 Settings to Clear the Position Deviation

A position deviation in the HWBB state is cleared according to the setting of Pn200 = n.□X□□ (Clear Operation). If you specify not clearing the position deviation during position control (Pn200 = n.□1□□), the position deviation will accumulate unless the position reference from the host controller is canceled in the HWBB state. The following conditions may result.

- An A.d00 alarm (Position Deviation Overflow) may occur.
- If you turn ON the servo after changing from HWBB state to BB state, the Servomotor may move for the accumulated position deviation.

Therefore, stop the position reference from the host controller while in the HWBB state. If you specify not clearing the position deviation during position control (Pn200 = n.□1□□), input the CLR (Position Deviation Clear) signal during the HWBB or BB state to clear the position deviation.

11.2.11 ALM (Servo Alarm) Signal and ALO1, ALO2, and ALO3 (Alarm Code Output) Signals

The ALM (Servo Alarm) signal is not output in the HWBB state. The ALO1, ALO2, and ALO3 (Alarm Code Output) signals are not output in the HWBB state.

11.3 EDM1 (External Device Monitor)

The EDM1 (External Device Monitor) signal is used to monitor failures in the HWBB. Connect the monitor signal as a feedback signal, e.g., to the Safety Unit.

Note: To meet performance level e (PLe) in EN ISO 13849-1 and SIL3 in IEC 61508, the EDM1 signal must be monitored by the host controller. If the EDM1 signal is not monitored by the host controller, the level will be safety performance level c (PLc) and SIL1.

- Failure Detection Signal for EDM1 Signal

The relationship between the EDM1, /HWBB1, and /HWBB2 signals is shown below.

Detection of failures in the EDM1 signal circuit can be achieved by using the status of the /HWBB1, /HWBB2, and EDM1 signals in the following table. A failure can be detected by checking the failure status, e.g., when the power supply is turned ON.

Signal	Logic			
/HWBB1	ON	ON	OFF	OFF
/HWBB2	ON	OFF	ON	OFF
EDM1	OFF	OFF	OFF	ON

⚠ WARNING

- The EDM1 signal is not a safety output. Use it only for monitoring for failures.

11.3.1 EDM1 Output Signal Specifications

If an HWBB is requested by turning OFF the two HWBB input signal channels (/HWBB1 and /HWBB2) when the safety function is operating normally, the EDM1 output signal will be turned ON within 8 ms.

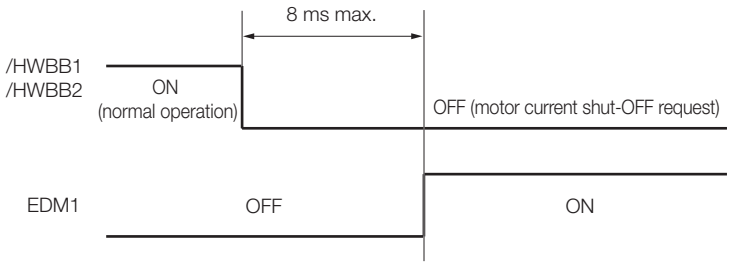

11.4 Applications Examples for Safety Functions

This section provides examples of using the safety functions.

11.4.1 Connection Example

In the following example, a Safety Unit is used and the HWBB operates when the guard is opened.

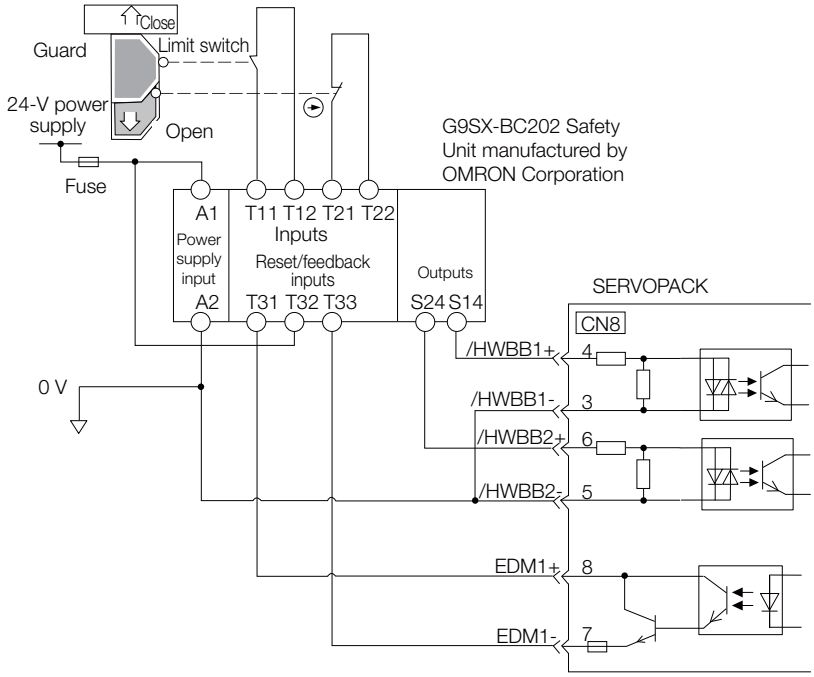

When the guard is opened, both the /HWBB1 and the /HWBB2 signals turn OFF, and the EDM1 signal turns ON. Because the feedback circuit is ON while the guard is closed, the Safety Unit is reset, the /HWBB1 and the / HWBB2 signals turn ON, and the operation is enabled.

Note: The EDM1 signal is used as a source output. Connect the EDM1 so that the current flows from EMD1+ to EMD1-.

11.4.2 Failure Detection Method

If a failure occurs (e.g., the /HWBB1 or the /HWBB2 signal remains ON), the Safety Unit is not reset when the guard is closed because the EDM1 signal remains OFF. Therefore starting is not possible and a failure is detected.
In this case the following must be considered: an error in the external device, disconnection of the external wiring, short-circuiting in the external wiring, or a failure in the SERVOPACK. Find the cause and correct the problem.

11.4.3 Procedure

1	Request is received to open the guard.
2	If the Servomotor is operating, a stop command is received from the host controller, the Servomotor stops, and the servo is turned OFF.
3	The guard is opened.
4	The /HWBB1 and /HWBB2 signals turn OFF and the HWBB operates. (Working inside the guard is enabled.)
5	The worker leaves the guarded area after completing work.
6	The guard is closed.
7	The servo is turned ON by the host controller.

11.5 Validating Safety Functions

When you commission the system or perform maintenance or SERVOPACK replacement, you must always perform the following validation test on the HWBB function after completing the wiring. (It is recommended that you keep the confirmation results as a record.)

- When the /HWBB1 and /HWBB2 signals turn OFF, confirm that the Panel Operator or Digital Operator displays **Hbb** and that the Servomotor does not operate.
- Monitor the ON/OFF status of the /HWBB1 and /HWBB2 signals.
  If the ON/OFF status of the signals do not coincide with the display, the following must be considered: an error in the external device, disconnection of the external wiring, short-circuiting in the external wiring, or a failure in the SERVOPACK. Find the cause and correct the problem.
  Refer to the following sections for details on the monitor.
  ☞ *13.3.4 Safety Input Signal Monitor (Un015)* on page 13-10
- Confirm that the EDM1 signal is OFF while in normal operation by using the feedback circuit input display of the connected device.

11.6 Connecting a Safety Function Device

Use the following procedure to connect a safety function device.

1. Remove the Safety Jumper Connector from the connector for the safety function device (CN8).

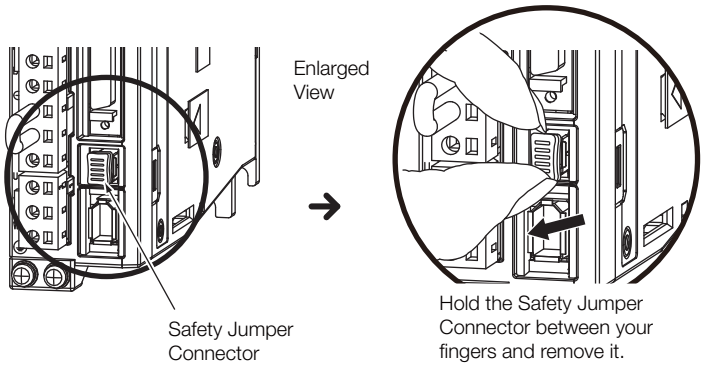

2. Connect the safety function device to the connector for the safety function device (CN8).

Note: If you do not connect a safety function device, leave the Safety Jumper Connector connected to the connector for the safety function device (CN8). If the SERVOPACK is used without the Safety Jumper Connector connected to CN8, no current will be supplied to the Servomotor and no motor torque will be output. In this case, **Hbb** will be displayed on the Digital Operator.

Maintenance

12

This chapter provides information on the meaning of, causes of, and corrections for alarms and warnings.

12.1 Inspections and Part Replacement 12-2

12.1.1 Inspections 12-2
12.1.2 Guidelines for Part Replacement 12-2
12.1.3 Replacing the Battery 12-3

12.2 Alarm Displays 12-5

12.2.1 List of Alarms 12-5
12.2.2 Troubleshooting Alarms 12-12
12.2.3 Resetting Alarms 12-41
12.2.4 Displaying the Alarm History 12-42
12.2.5 Clearing the Alarm History 12-43
12.2.6 Resetting Alarms Detected in Option Modules 12-44
12.2.7 Resetting Motor Type Alarms 12-46

12.3 Warning Displays 12-48

12.3.1 List of Warnings 12-48
12.3.2 Troubleshooting Warnings 12-50

12.4 Troubleshooting Based on the Operation and Conditions of the Servomotor . . 12-56

12.1 Inspections and Part Replacement

This section describes inspections and part replacement for SERVOPACKs.

12.1.1 Inspections

Perform the inspections given in the following table at least once every year for the SERVOPACK. Daily inspections are not required.

Item	Frequency	Inspection	Correction
Exterior	At least once a year	Check for dust, dirt, and oil on the surfaces.	Clean with compressed air or a cloth.
Loose Screws		Check for loose terminal block and connector screws and for other loose parts.	Tighten any loose screws or other loose parts.

12.1.2 Guidelines for Part Replacement

The following electric or electronic parts are subject to mechanical wear or deterioration over time. Use one of the following methods to check the standard replacement period.

- Use the service life prediction function of the SERVOPACK.
  Refer to the following section for information on service life predictions.
  ☞ *9.4 Monitoring Product Life* on page 9-15
- Use the following table.

Part	Standard Replacement Period	Remarks
Cooling Fan	4 years to 5 years	The standard replacement periods given on the left are for the following operating conditions. • Surrounding air temperature: Annual average of 30°C • Load factor: 80% max. • Operation rate: 20 hours/day max.
Electrolytic Capacitor	10 years	
Relays	100,000 power ON operations	Power ON frequency: Once an hour
Battery	3 years without power supplied	Surrounding temperature without power supplied: 20°C

When any standard replacement period is close to expiring, contact your Yaskawa representative. After an examination of the part in question, we will determine whether the part should be replaced.

Important

The parameters of any SERVOPACKs that are sent to Yaskawa for part replacement are reset to the factory settings before they are returned to you. Always keep a record of the parameter settings. And, always confirm that the parameters are properly set before starting operation.

12.1.3 Replacing the Battery

If the battery voltage drops to approximately 2.7 V or less, an A.830 alarm (Encoder Battery Alarm) or an A.930 warning (Absolute Encoder Battery Error) will be displayed.

If this alarm or warning is displayed, the battery must be replaced.
Refer to the following section for the battery replacement procedure.
☞ *Battery Replacement Procedure* on page 12-3

Battery Alarm/Warning Selection

Whether to display an alarm or a warning is determined by the setting of Pn008 = n.□□□X (Low Battery Voltage Alarm/Warning Selection).

Parameter		Meaning	When Enabled	Classification
Pn008	n.□□□0 (default setting)	Output alarm (A.830) for low battery voltage.	After restart	Setup
	n.□□□1	Output warning (A.930) for low battery voltage.		

- Pn008 = n.□□□0
  The ALM (Servo Alarm) signal is output for up to five seconds when the control power supply is turned ON, and then the battery voltage is monitored for four seconds.
  No alarm will be displayed even if the battery voltage drops below the specified value after these four seconds.
- Pn008 = n.□□□1
  The ALM (Servo Alarm) signal is output for up to five seconds when the control power supply is turned ON, and then the battery voltage is monitored continuously.

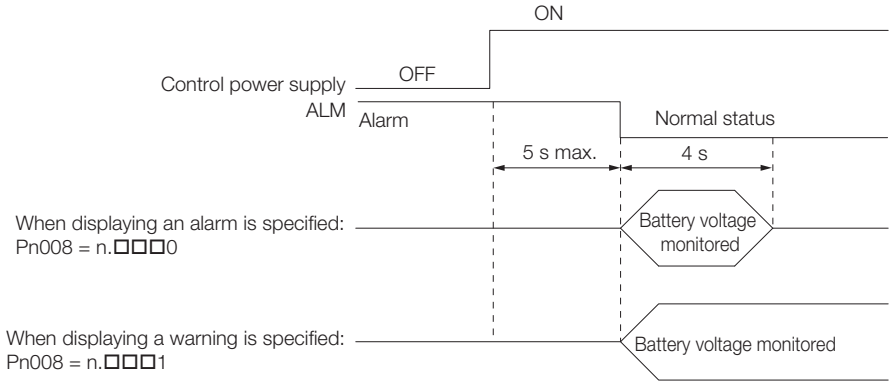

Battery Replacement Procedure

◆ When Installing a Battery on the Host Controller

1. Turn ON only the control power supply to the SERVOPACK.
2. Remove the old battery and mount a new battery.
3. Turn OFF the control power supply to the SERVOPACK to clear the A.830 alarm (Encoder Battery Alarm).
4. Turn ON the control power supply to the SERVOPACK again.
5. Make sure that the alarm has been cleared and that the SERVOPACK operates normally.

◆ When Using an Encoder Cable with a Battery Case

1. Turn ON only the control power supply to the SERVOPACK.

> **Important**
> If you remove the Battery or disconnect the Encoder Cable while the control power supply to the SERVOPACK is OFF, the absolute encoder data will be lost.

2. Open the cover of the Battery Case.

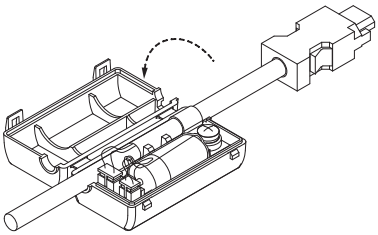

3. Remove the old Battery and mount a new Battery.

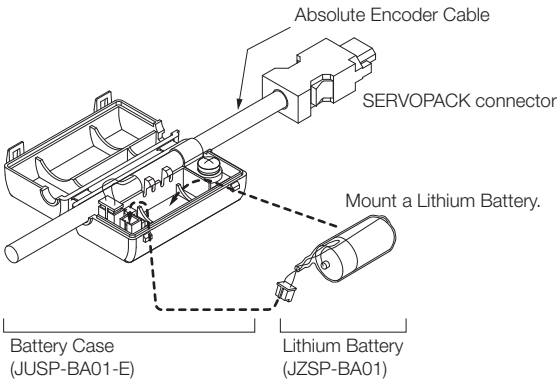

4. Close the cover of the Battery Case.

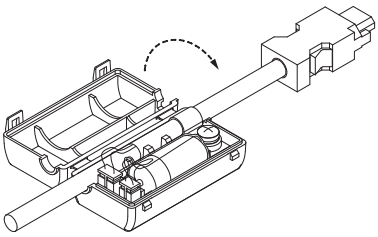

5. Turn OFF the power supply to the SERVOPACK to clear the A.830 alarm (Encoder Battery Alarm).
6. Turn ON the power supply to the SERVOPACK.
7. Make sure that the alarm has been cleared and that the SERVOPACK operates normally.

12.2 Alarm Displays

If an error occurs in the SERVOPACK, an alarm number will be displayed on the panel display.

However, if only "-" appears on the panel display, this indicates a SERVOPACK system error. Replace the SERVOPACK.

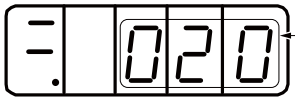

Example: If an A.020 alarm occurs, "020" will flash on the display.

This section provides a list of the alarms that may occur and the causes of and corrections for those alarms.

12.2.1 List of Alarms

The list of alarms gives the alarm name, alarm meaning, alarm stopping method, alarm reset possibility, and alarm code output in order of the alarm numbers.

Servomotor Stopping Method for Alarms

Refer to the following section for information on the stopping method for alarms.

☞ *5.14.2 Servomotor Stopping Method for Alarms* on page 5-42

Alarm Reset Possibility

Yes: You can use an alarm reset to clear the alarm. However, this assumes that the cause of the alarm has been removed.
No: You cannot clear the alarm.

List of Alarms

Alarm Number	Alarm Name	Alarm Meaning	Servo-motor Stop-ping Method	Alarm Reset Possi-ble?	Alarm Code Output		
					ALO1	ALO2	ALO3
A.020	Parameter Checksum Error	There is an error in the parameter data in the SERVOPACK.	Gr.1	No	H	H	H
A.021	Parameter Format Error	There is an error in the parameter data format in the SERVOPACK.	Gr.1	No	H	H	H
A.022	System Checksum Error	There is an error in the parameter data in the SERVOPACK.	Gr.1	No	H	H	H
A.024	System Alarm	An internal program error occurred in the SERVO-PACK.	Gr.1	No	H	H	H
A.025	System Alarm	An internal program error occurred in the SERVO-PACK.	Gr.1	No	H	H	H
A.030	Main Circuit Detector Error	There is an error in the detec-tion data for the main circuit.	Gr.1	Yes	H	H	H
A.040	Parameter Setting Error	A parameter setting is out-side of the setting range.	Gr.1	No	H	H	H

Continued on next page.

Continued from previous page.

Alarm Number	Alarm Name	Alarm Meaning	Servo-motor Stop-ping Method	Alarm Reset Possi-ble?	Alarm Code Output		
					ALO1	ALO2	ALO3
A.041	Encoder Output Pulse Setting Error	The setting of Pn212 (Number of Encoder Output Pulses) or Pn281 (Encoder Output Resolution) is outside of the setting range or does not satisfy the setting conditions.	Gr.1	No	H	H	H
A.042	Parameter Combination Error	The combination of some parameters exceeds the setting range.	Gr.1	No	H	H	H
A.044	Semi-Closed/Fully-Closed Loop Control Parameter Setting Error	The settings of the Option Module and Pn002 = n.X□□□ (External Encoder Usage) do not match.	Gr.1	No	H	H	H
A.050	Combination Error	The capacities of the SERVOPACK and Servomotor do not match.	Gr.1	Yes	H	H	H
A.051	Unsupported Device Alarm	An unsupported device was connected.	Gr.1	No	H	H	H
A.070	Motor Type Change Detected	The connected motor is a different type of motor from the previously connected motor.	Gr.1	No	H	H	H
A.080	Linear Encoder Pitch Setting Error	The setting of Pn282 (Linear Encoder Scale Pitch) has not been changed from the default setting.	Gr.1	No	H	H	H
A.0b0	Invalid Servo ON Command Alarm	The /S-ON (Servo ON) signal was input from the host controller after a utility function that turns ON the Servomotor was executed.	Gr.1	Yes	H	H	H
A.100	Overcurrent Detected	An overcurrent flowed through the power transistor or the heat sink overheated.	Gr.1	No	L	H	H
A.101	Motor Overcurrent Detected	The current to the motor exceeded the allowable current.	Gr.1	No	L	H	H
A.300	Regeneration Error	There is an error related to regeneration.	Gr.1	Yes	L	L	H
A.320	Regenerative Overload	A regenerative overload occurred.	Gr.2	Yes	L	L	H
A.330	Main Circuit Power Supply Wiring Error	• The AC power supply input setting or DC power supply input setting is not correct. • The power supply wiring is not correct.	Gr.1	Yes	L	L	H
A.400	Overvoltage	The main circuit DC voltage is too high.	Gr.1	Yes	H	H	L
A.410	Undervoltage	The main circuit DC voltage is too low.	Gr.2	Yes	H	H	L
A.510	Overspeed	The motor exceeded the maximum speed.	Gr.1	Yes	L	H	L

Continued on next page.

Continued from previous page.

Alarm Number	Alarm Name	Alarm Meaning	Servo-motor Stop-ping Method	Alarm Reset Possi-ble?	Alarm Code Output		
					ALO1	ALO2	ALO3
A.511	Encoder Output Pulse Overspeed	• Rotary Servomotor: The pulse output speed for the setting of Pn212 (Number of Encoder Output Pulses) was exceeded. • Linear Servomotor: The motor speed upper limit for the setting of Pn281 (Encoder Output Resolu-tion) was exceeded.	Gr.1	Yes	L	H	L
A.520	Vibration Alarm	Abnormal oscillation was detected in the motor speed.	Gr.1	Yes	L	H	L
A.521	Autotuning Alarm	Vibration was detected during autotuning for the tun-ing-less function.	Gr.1	Yes	L	H	L
A.550	Maximum Speed Setting Error	The setting of Pn385 (Maxi-mum Motor Speed) is greater than the maximum motor speed.	Gr.1	Yes	L	H	L
A.710	Instantaneous Overload	The Servomotor was operat-ing for several seconds to several tens of seconds under a torque that largely exceeded the rating.	Gr.2	Yes	L	L	L
A.720	Continuous Overload	The Servomotor was operat-ing continuously under a torque that exceeded the rat-ing.	Gr.1	Yes	L	L	L
A.730	Dynamic Brake Overload	When the dynamic brake was applied, the rotational or lin-ear kinetic energy exceeded the capacity of the dynamic brake resistor.	Gr.1	Yes	L	L	L
A.731							
A.740	Inrush Current Limiting Resistor Overload	The main circuit power sup-ply was frequently turned ON and OFF.	Gr.1	Yes	L	L	L
A.7A1	Internal Temperature Error 1 (Control Board Temperature Error)	The surrounding tempera-ture of the control PCB is abnormal.	Gr.2	Yes	L	L	L
A.7A2	Internal Temperature Error 2 (Power Board Temperature Error)	The surrounding tempera-ture of the power PCB is abnormal.	Gr.2	Yes	L	L	L
A.7A3	Internal Temperature Sensor Error	An error occurred in the tem-perature sensor circuit.	Gr.2	No	L	L	L
A.7Ab	SERVOPACK Built-in Fan Stopped	The fan inside the SERVO-PACK stopped.	Gr.1	Yes	L	L	L
A.810	Encoder Backup Alarm	The power supplies to the encoder all failed and the position data was lost.	Gr.1	No	H	H	H
A.820	Encoder Checksum Alarm	There is an error in the checksum results for encoder memory.	Gr.1	No	H	H	H
A.830	Encoder Battery Alarm	The battery voltage was lower than the specified level after the control power sup-ply was turned ON.	Gr.1	Yes	H	H	H

Continued on next page.

Continued from previous page.

Alarm Number	Alarm Name	Alarm Meaning	Servo-motor Stop-ping Method	Alarm Reset Possi-ble?	Alarm Code Output		
					ALO1	ALO2	ALO3
A.840	Encoder Data Alarm	There is an internal data error in the encoder.	Gr.1	No	H	H	H
A.850	Encoder Overspeed	The encoder was operating at high speed when the power was turned ON.	Gr.1	No	H	H	H
A.860	Encoder Overheated	The internal temperature of the rotary encoder or linear encoder is too high.	Gr.1	No	H	H	H
A.861	Motor Overheated	The internal temperature of motor is too high.	Gr.1	No	H	H	H
A.862	Overheat Alarm	The input voltage (tempera-ture) for the overheat protec-tion input (TH) signal exceeded the setting of Pn61B (Overheat Alarm Level).	Gr.1	Yes	H	H	H
A.890	Encoder Scale Error	A failure occurred in the lin-ear encoder.	Gr.1	No	H	H	H
A.891	Encoder Module Error	An error occurred in the lin-ear encoder.	Gr.1	No	H	H	H
A.8A0	External Encoder Error	An error occurred in the external encoder.	Gr.1	Yes	H	H	H
A.8A1	External Encoder Module Error	An error occurred in the Serial Converter Unit.	Gr.1	Yes	H	H	H
A.8A2	External Incremental Encoder Sensor Error	An error occurred in the external encoder.	Gr.1	Yes	H	H	H
A.8A3	External Absolute Encoder Position Error	An error occurred in the posi-tion data of the external encoder.	Gr.1	Yes	H	H	H
A.8A5	External Encoder Overspeed	An overspeed error occurred in the external encoder.	Gr.1	Yes	H	H	H
A.8A6	External Encoder Overheated	An overheating error occurred in the external encoder.	Gr.1	Yes	H	H	H
A.b10	Speed Reference A/D Error	An error occurred in the A/D converter for the speed refer-ence input.	Gr.2	Yes	H	H	H
A.b11	Speed Reference A/D Data Error	An error occurred in the A/D conversion data for the speed reference.	Gr.2	Yes	H	H	H
A.b20	Torque Reference A/D Error	An error occurred in the A/D converter for the torque ref-erence input.	Gr.2	Yes	H	H	H
A.b33	Current Detection Error 3	An error occurred in the cur-rent detection circuit.	Gr.1	No	H	H	H
A.bC0	System Alarm 10	Internal program error 10 occurred in the SERVO-PACK.	Gr.1	No	H	H	H
A.bF0	System Alarm 0	Internal program error 0 occurred in the SERVO-PACK.	Gr.1	No	H	H	H
A.bF1	System Alarm 1	Internal program error 1 occurred in the SERVO-PACK.	Gr.1	No	H	H	H

Continued on next page.

Continued from previous page.

Alarm Number	Alarm Name	Alarm Meaning	Servo-motor Stop-ping Method	Alarm Reset Possi-ble?	Alarm Code Output		
					ALO1	ALO2	ALO3
A.bF2	System Alarm 2	Internal program error 2 occurred in the SERVO-PACK.	Gr.1	No	H	H	H
A.bF3	System Alarm 3	Internal program error 3 occurred in the SERVO-PACK.	Gr.1	No	H	H	H
A.bF4	System Alarm 4	Internal program error 4 occurred in the SERVO-PACK.	Gr.1	No	H	H	H
A.bF5	System Alarm 5	Internal program error 5 occurred in the SERVO-PACK.	Gr.1	No	H	H	H
A.bF6	System Alarm 6	Internal program error 6 occurred in the SERVO-PACK.	Gr.1	No	H	H	H
A.bF7	System Alarm 7	Internal program error 7 occurred in the SERVO-PACK.	Gr.1	No	H	H	H
A.bF8	System Alarm 8	Internal program error 8 occurred in the SERVO-PACK.	Gr.1	No	H	H	H
A.C10	Servomotor Out of Control	The Servomotor ran out of control.	Gr.1	Yes	L	H	L
A.C20	Phase Detection Error	The detection of the phase is not correct.	Gr.1	No	L	H	L
A.C21	Polarity Sensor Error	An error occurred in the polarity sensor.	Gr.1	No	L	H	L
A.C22	Phase Information Disagreement	The phase information does not match.	Gr.1	No	L	H	L
A.C50	Polarity Detection Failure	The polarity detection failed.	Gr.1	No	L	H	L
A.C51	Overtravel Detected during Polarity Detection	The overtravel signal was detected during polarity detection.	Gr.1	Yes	L	H	L
A.C52	Polarity Detection Not Completed	The servo was turned ON before the polarity was detected.	Gr.1	Yes	L	H	L
A.C53	Out of Range of Motion for Polarity Detection	The travel distance exceeded the setting of Pn48E (Polarity Detection Range).	Gr.1	No	L	H	L
A.C54	Polarity Detection Failure 2	The polarity detection failed.	Gr.1	No	L	H	L
A.C80	Encoder Clear Error or Multiturn Limit Setting Error	The multiturn data for the absolute encoder was not correctly cleared or set.	Gr.1	No	L	H	L
A.C90	Encoder Communications Error	Communications between the encoder and SERVO-PACK is not possible.	Gr.1	No	L	H	L
A.C91	Encoder Communications Position Data Acceleration Rate Error	An error occurred in calculat-ing the position data of the encoder.	Gr.1	No	L	H	L
A.C92	Encoder Communications Timer Error	An error occurred in the com-munications timer between the encoder and SERVO-PACK.	Gr.1	No	L	H	L

Continued on next page.

Continued from previous page.

Alarm Number	Alarm Name	Alarm Meaning	Servo-motor Stop-ping Method	Alarm Reset Possi-ble?	Alarm Code Output		
					ALO1	ALO2	ALO3
A.CA0	Encoder Parameter Error	The parameters in the encoder are corrupted.	Gr.1	No	L	H	L
A.Cb0	Encoder Echoback Error	The contents of communications with the encoder are incorrect.	Gr.1	No	L	H	L
A.CC0	Multiturn Limit Disagreement	Different multiturn limits have been set in the encoder and the SERVOPACK.	Gr.1	No	L	H	L
A.CF1	Reception Failed Error in Feedback Option Module Communications	Receiving data from the Feedback Option Module failed.	Gr.1	No	L	H	L
A.CF2	Timer Stopped Error in Feedback Option Module Communications	An error occurred in the timer for communications with the Feedback Option Module.	Gr.1	No	L	H	L
A.d00	Position Deviation Overflow	The setting of Pn520 (Position Deviation Overflow Alarm Level) was exceeded by the position deviation.	Gr.1	Yes	L	L	H
A.d01	Position Deviation Overflow Alarm at Servo ON	The servo was turned ON after the position deviation exceeded the setting of Pn526 (Position Deviation Overflow Alarm Level at Servo ON) while the servo was OFF.	Gr.1	Yes	L	L	H
A.d02	Position Deviation Overflow Alarm for Speed Limit at Servo ON	If position deviation remains in the deviation counter, the setting of Pn529 or Pn584 (Speed Limit Level at Servo ON) limits the speed when the servo is turned ON. This alarm occurs if reference pulses are input and the setting of Pn520 (Position Deviation Overflow Alarm Level) is exceeded before the limit is cleared.	Gr.2	Yes	L	L	H
A.d10	Motor-Load Position Deviation Overflow	There was too much position deviation between the motor and load during fully-closed loop control.	Gr.2	Yes	L	L	H
A.d30	Position Data Overflow	The position feedback data exceeded ±1,879,048,192.	Gr.1	No	L	L	H
A.E71	Safety Option Module Detection Failure	Detection of the Safety Option Module failed.	Gr.1	No	H	L	L
A.E72	Feedback Option Module Detection Failure	Detection of the Feedback Option Module failed.	Gr.1	No	H	L	L
A.E74	Unsupported Safety Option Module	An unsupported Safety Option Module was connected.	Gr.1	No	H	L	L
A.Eb1	Safety Function Signal Input Timing Error	An error occurred in the input timing of the safety function signal.	Gr.1	No	H	L	L
A.EC8	Gate Drive Error 1	An error occurred in the gate drive circuit.	Gr.1	No	H	L	L
A.EC9	Gate Drive Error 2	An error occurred in the gate drive circuit.	Gr.1	No	H	L	L

Continued on next page.

Continued from previous page.

Alarm Number	Alarm Name	Alarm Meaning	Servo-motor Stop-ping Method	Alarm Reset Possi-ble?	Alarm Code Output		
					ALO1	ALO2	ALO3
A.F10	Power Supply Line Open Phase	The voltage was low for more than one second for phase R, S, or T when the main power supply was ON.	Gr.2	Yes	H	L	H
FL-1*	System Alarm	An internal program error occurred in the SERVO-PACK.	–	No	Undefined.		
FL-2*							
FL-3*							
FL-4*							
FL-5*							
FL-6*							
FL-7*							
CPF00	Digital Operator Communications Error 1	Communications were not possible between the Digital Operator (model: JUSP-OP05A-1-E) and the SERVO-PACK (e.g., a CPU error occurred).	–	No	Undefined.		
CPF01	Digital Operator Communications Error 2						

* These alarms are not stored in the alarm history. They are only displayed on the panel display.

Note: The A.Eb0, A.Eb2 to A.Eb9, and A.EC0 to A.EC2 alarms can occur when a Safety Module is connected. Refer to the following manual for details.

Σ-V-Series/Σ-V-Series for Large-Capacity Models/Σ-7-Series User's Manual Safety Module (Manual No.: SIEP C720829 06)

12.2.2 Troubleshooting Alarms

The causes of and corrections for the alarms are given in the following table. Contact your Yaskawa representative if you cannot solve a problem with the correction given in the table.

Alarm Number: Alarm Name	Possible Cause	Confirmation	Correction	Reference
A.020: Parameter Checksum Error (There is an error in the parameter data in the SERVOPACK.)	The power supply voltage suddenly dropped.	Measure the power supply voltage.	Set the power supply voltage within the specified range, and initialize the parameter settings.	page 5-11
	The power supply was shut OFF while writing parameter settings.	Check the timing of shutting OFF the power supply.	Initialize the parameter settings and then set the parameters again.	
	The number of times that parameters were written exceeded the limit.	Check to see if the parameters were frequently changed from the host controller.	The SERVOPACK may be faulty. Replace the SERVOPACK. Reconsider the method for writing the parameters.	–
	A malfunction was caused by noise from the AC power supply, ground, static electricity, or other source.	Turn the power supply to the SERVOPACK OFF and ON again. If the alarm still occurs, noise may be the cause.	Implement countermeasures against noise.	page 4-5
	Gas, water drops, or cutting oil entered the SERVOPACK and caused failure of the internal components.	Check the installation conditions.	The SERVOPACK may be faulty. Replace the SERVOPACK.	–
	A failure occurred in the SERVOPACK.	Turn the power supply to the SERVOPACK OFF and ON again. If the alarm still occurs, the SERVOPACK may have failed.	The SERVOPACK may be faulty. Replace the SERVOPACK.	–
A.021: Parameter Format Error (There is an error in the parameter data format in the SERVOPACK.)	The software version of the SERVOPACK that caused the alarm is older than the software version of the parameters specified to write.	Read the product information to see if the software versions are the same. If they are different, it could be the cause of the alarm.	Write the parameters from another SERVOPACK with the same model and the same software version, and then turn the power OFF and ON again.	page 9-2
	A failure occurred in the SERVOPACK.	–	The SERVOPACK may be faulty. Replace the SERVOPACK.	–
A.022: System Checksum Error (There is an error in the parameter data in the SERVOPACK.)	The power supply voltage suddenly dropped.	Measure the power supply voltage.	The SERVOPACK may be faulty. Replace the SERVOPACK.	–
	The power supply was shut OFF while setting a utility function.	Check the timing of shutting OFF the power supply.	The SERVOPACK may be faulty. Replace the SERVOPACK.	–
	A failure occurred in the SERVOPACK.	Turn the power supply to the SERVOPACK OFF and ON again. If the alarm still occurs, the SERVOPACK may have failed.	The SERVOPACK may be faulty. Replace the SERVOPACK.	–

Continued on next page.

Continued from previous page.

Alarm Number: Alarm Name	Possible Cause	Confirmation	Correction	Reference
A.024: System Alarm (An internal program error occurred in the SERVOPACK.)	A failure occurred in the SERVOPACK.	–	The SERVOPACK may be faulty. Replace the SERVOPACK.	–
A.025: System Alarm (An internal program error occurred in the SERVOPACK.)	A failure occurred in the SERVOPACK.	–	The SERVOPACK may be faulty. Replace the SERVOPACK.	–
A.030: Main Circuit Detector Error	A failure occurred in the SERVOPACK.	–	The SERVOPACK may be faulty. Replace the SERVOPACK.	–
	The jumper between the DC Reactor terminals (⊖1 and ⊖2) was removed or there is faulty contact.	–	Correct the wiring between the DC Reactor terminals.	–
	The cable between the DC Reactor and SERVOPACK is not wired correctly or there is a faulty contact.			
A.040: Parameter Setting Error (A parameter setting is outside of the setting range.)	The SERVOPACK and Servomotor capacities do not match each other.	Check the combination of the SERVOPACK and Servomotor capacities.	Select a proper combination of SERVOPACK and Servomotor capacities.	page 1-9
	The motor parameter file was not written to the linear encoder. (This applies only when not using a Serial Converter Unit.)	Check to see if the motor parameter file was written to the linear encoder.	Write the motor parameter file to the linear encoder.	page 5-20
	A failure occurred in the SERVOPACK.	–	The SERVOPACK may be faulty. Replace the SERVOPACK.	–
	A parameter setting is outside of the setting range.	Check the setting ranges of the parameters that have been changed.	Set the parameters to values within the setting ranges.	–
	The electronic gear ratio is outside of the setting range.	Check the electronic gear ratio. The ratio must be within the following range: 0.001 < (Pn20E/Pn210) < 64,000.	Set the electronic gear ratio in the following range: 0.001 < (Pn20E/Pn210) < 64,000.	page 5-47
A.041: Encoder Output Pulse Setting Error	The setting of Pn212 (Number of Encoder Output Pulses) or Pn281 (Encoder Output Resolution) is outside of the setting range or does not satisfy the setting conditions.	Check the setting of Pn212 or Pn281.	Set Pn212 or Pn281 to an appropriate value.	page 6-48

Continued on next page.

Continued from previous page.

Alarm Number: Alarm Name	Possible Cause	Confirmation	Correction	Reference
A.042: Parameter Combination Error	The speed of program jogging went below the setting range when the electronic gear ratio (Pn20E/ Pn210) or the Servomotor was changed.	Check to see if the detection conditions*1 are satisfied.	Decrease the setting of the electronic gear ratio (Pn20E/Pn210).	page 5-47
	The speed of program jogging went below the setting range when Pn533 or Pn585 (Program Jogging Movement Speed) was changed.	Check to see if the detection conditions*1 are satisfied.	Increase the setting of Pn533 or Pn585.	page 7-20
	The movement speed of advanced autotuning went below the setting range when the electronic gear ratio (Pn20E/ Pn210) or the Servomotor was changed.	Check to see if the detection conditions*2 are satisfied.	Decrease the setting of the electronic gear ratio (Pn20E/Pn210).	page 5-47
A.044: Semi-Closed/ Fully-Closed Loop Control Parameter Setting Error	The setting of the Fully-closed Module does not match the setting of Pn002 = n.X□□□ (External Encoder Usage).	Check the setting of Pn002 = n.X□□□.	Make sure that the setting of the Fully-closed Module agrees with the setting of Pn002 = n.X□□□.	page 10-6
A.050: Combination Error (The capacities of the SERVOPACK and Servomotor do not match.)	The SERVOPACK and Servomotor capacities do not match each other.	Confirm that the following condition is met: 1/4 ≤ (Servomotor capacity/SERVOPACK capacity) ≤ 4	Select a proper combination of the SERVOPACK and Servomotor capacities.	page 1-9
	A failure occurred in the encoder.	Replace the encoder and check to see if the alarm still occurs.	Replace the Servomotor or encoder.	–
	A failure occurred in the SERVOPACK.	–	The SERVOPACK may be faulty. Replace the SERVOPACK.	–
A.051: Unsupported Device Alarm	The motor parameter file was not written to the linear encoder. (This applies only when not using a Serial Converter Unit.)	Check to see if the motor parameter file was written to the linear encoder.	Write the motor parameter file to the linear encoder.	page 5-20
	An unsupported Serial Converter Unit or encoder (e.g., an external encoder) is connected to the SERVOPACK.	Check the product combination specifications.	Change to a correct combination of models.	–

Continued on next page.

Continued from previous page.

Alarm Number: Alarm Name	Possible Cause	Confirmation	Correction	Reference
A.070: Motor Type Change Detected (The connected motor is a different type of motor from the previously connected motor.)	A Rotary Servomotor was removed and a Linear Servomotor was connected.	–	Set the parameters for a Linear Servomotor and reset the motor type alarm. Then, turn the power supply to the SERVOPACK OFF and ON again.	page 12-46
	A Linear Servomotor was removed and a Rotary Servomotor was connected.	–	Set the parameters for a Rotary Servomotor and reset the motor type alarm. Then, turn the power supply to the SERVOPACK OFF and ON again.	page 12-46
A.080: Linear Encoder Pitch Setting Error	The setting of Pn282 (Linear Encoder Scale Pitch) has not been changed from the default setting.	Check the setting of Pn282.	Correct the setting of Pn282.	page 5-19
A.0b0: Invalid Servo ON Command Alarm	The /S-ON (Servo ON) signal was input from the host controller after a utility function that turns ON the Servomotor was executed.	–	Turn the power supply to the SERVOPACK OFF and ON again. Or, execute a software reset.	page 6-97
A.100: Overcurrent Detected (An overcurrent flowed through the power transistor or the heat sink overheated.)	The Main Circuit Cable is not wired correctly or there is faulty contact.	Check the wiring.	Correct the wiring.	page 4-25
	There is a short-circuit or ground fault in a Main Circuit Cable.	Check for short-circuits across Servomotor phases U, V, and W, or between the ground and Servomotor phases U, V, and W.	The cable may be short-circuited. Replace the cable.	
	There is a short-circuit or ground fault inside the Servomotor.	Check for short-circuits across Servomotor phases U, V, and W, or between the ground and Servomotor phases U, V, or W.	The Servomotor may be faulty. Replace the Servomotor.	
	There is a short-circuit or ground fault inside the SERVOPACK.	Check for short-circuits across the Servomotor connection terminals U, V, and W on the SERVOPACK, or between the ground and terminals U, V, or W.	The SERVOPACK may be faulty. Replace the SERVOPACK.	
	The regenerative resistor is not wired correctly or there is faulty contact.	Check the wiring.	Correct the wiring.	page 4-22

Continued on next page.

Continued from previous page.

Alarm Number: Alarm Name	Possible Cause	Confirmation	Correction	Reference
A.100: Overcurrent Detected (An overcurrent flowed through the power transistor or the heat sink overheated.)	The dynamic brake (DB, emergency stop executed from the SERVOPACK) was frequently activated, or a DB overload alarm occurred.	Check the power consumed by the DB resistor to see how frequently the DB is being used. Or, check the alarm display to see if a DB overload alarm (A.730 or A.731) has occurred.	Change the SERVOPACK model, operating methods, or the mechanisms so that the dynamic brake does not need to be used so frequently.	–
	The regenerative processing capacity was exceeded.	Check the regenerative load ratio in the SigmaWin+ Motion Monitor Tab Page to see how frequently the regenerative resistor is being used.	Recheck the operating conditions and load.	*3
	The SERVOPACK regenerative resistance is too small.	Check the regenerative load ratio in the SigmaWin+ Motion Monitor Tab Page to see how frequently the regenerative resistor is being used.	Change the regenerative resistance to a value larger than the SERVOPACK minimum allowable resistance.	
	A heavy load was applied while the Servomotor was stopped or running at a low speed.	Check to see if the operating conditions exceed Servo Drive specifications.	Reduce the load applied to the Servomotor. Or, increase the operating speed.	–
	A malfunction was caused by noise.	Improve the noise environment, e.g. by improving the wiring or installation conditions, and check to see if the alarm still occurs.	Implement countermeasures against noise, such as correct wiring of the FG. Use an FG wire size equivalent to the SERVOPACK's main circuit wire size.	–
	A failure occurred in the SERVOPACK.	–	Turn the power supply to the SERVOPACK OFF and ON again. If the alarm still occurs, the SERVOPACK may be faulty. Replace the SERVOPACK.	–

Continued on next page.

Continued from previous page.

Alarm Number: Alarm Name	Possible Cause	Confirmation	Correction	Reference
A.101: Motor Overcurrent Detected (The current to the motor exceeded the allowable current.)	The Main Circuit Cable is not wired correctly or there is faulty contact.	Check the wiring.	Correct the wiring.	page 4-25
	There is a short-circuit or ground fault in a Main Circuit Cable.	Check for short-circuits across cable phases U, V, and W, or between the ground and cable phases U, V, and W.	The cable may be short-circuited. Replace the cable.	
	There is a short-circuit or ground fault inside the Servomotor.	Check for short-circuits across Servomotor phases U, V, and W, or between the ground and Servomotor phases U, V, or W.	The Servomotor may be faulty. Replace the Servomotor.	
	There is a short-circuit or ground fault inside the SERVOPACK.	Check for short-circuits across the Servomotor connection terminals U, V, and W on the SERVOPACK, or between the ground and terminals U, V, or W.	The SERVOPACK may be faulty. Replace the SERVOPACK.	
	A heavy load was applied while the Servomotor was stopped or running at a low speed.	Check to see if the operating conditions exceed Servo Drive specifications.	Reduce the load applied to the Servomotor. Or, increase the operating speed.	–
	A malfunction was caused by noise.	Improve the noise environment, e.g. by improving the wiring or installation conditions, and check to see if the alarm still occurs.	Implement countermeasures against noise, such as correct wiring of the FG. Use an FG wire size equivalent to the SERVOPACK's main circuit wire size.	–
	A failure occurred in the SERVOPACK.	–	Turn the power supply to the SERVOPACK OFF and ON again. If the alarm still occurs, the SERVOPACK may be faulty. Replace the SERVOPACK.	–

Continued on next page.

Continued from previous page.

Alarm Number: Alarm Name	Possible Cause	Confirmation	Correction	Reference
A.300: Regeneration Error	When using the built-in regenerative resistor, the jumper between the regenerative resistor terminals (B2 and B3) was removed from one of the following SERVOPACKs: SGD7S-3R8A, -5R5A, -7R6A, -120A, -180A, -200A, or -330A.	Check to see if the jumper is connected between power supply terminals B2 and B3.*4	Correctly connect a jumper.	page 4-22
	The External Regenerative Resistor or Regenerative Resistor Unit is not wired correctly, or was removed or disconnected.	Check the wiring of the External Regenerative Resistor or Regenerative Resistor Unit.*4	Correct the wiring of the External Regenerative Resistor or Regenerative Resistor Unit.	
	Pn600 (Regenerative Resistor Capacity) is not set to 0 and an External Regenerative Resistor is not connected to one of the following SERVOPACKs: SGD7S-R70A, -R90A,-1R6A, -2R8A, -R70F, -R90F, -2R1F, or -2R8F.	Check to see if an External Regenerative Resistor is connected and check the setting of Pn600.	Connect an External Regenerative Resistor, or set Pn600 (Regenerative Resistor Capacity) to 0 (setting unit: ×10 W) if no Regenerative Resistor is required.	page 5-58
	An External Regenerative Resistor is not connected to one of the following SERVOPACKs: SGD7S-470A, -550A, -590A, or -780A.	Check to see if an External Regenerative Resistor or a Regenerative Resistor Unit is connected and check the setting of Pn600.	Connect an External Regenerative Resistor and set Pn600 to an appropriate value, or connect a Regenerative Resistor Unit and set Pn600 to 0.	
	A failure occurred in the SERVOPACK.	–	While the main circuit power supply is OFF, turn the control power supply to the SERVOPACK OFF and ON again. If the alarm still occurs, the SERVOPACK may be faulty. Replace the SERVOPACK.	–

Continued on next page.

Continued from previous page.

Alarm Number: Alarm Name	Possible Cause	Confirmation	Correction	Reference
A.320: Regenerative Overload	The power supply voltage exceeded the specified range.	Measure the power supply voltage.	Set the power supply voltage within the specified range.	–
	The external regenerative resistance value or regenerative resistor capacity is too small, or there has been a continuous regeneration state.	Check the operating conditions or the capacity using the SigmaJunmaSize+ Capacity Selection Software or other means.	Change the regenerative resistance value or capacity. Reconsider the operating conditions using the SigmaJunmaSize+ Capacity Selection Software or other means.	*3
	There was a continuous regeneration state because a negative load was continuously applied.	Check the load applied to the Servomotor during operation.	Reconsider the system including the servo, machine, and operating conditions.	–
	The setting of Pn600 (Regenerative Resistor Capacity) is smaller than the capacity of the External Regenerative Resistor.	Check to see if a Regenerative Resistor is connected and check the setting of Pn600.	Correct the setting of Pn600.	page 5-58
	The setting of Pn603 (Regenerative Resistance) is smaller than the capacity of the External Regenerative Resistor.	Check to see if a Regenerative Resistor is connected and check the setting of Pn603.	Correct the setting of Pn603.	page 5-58
	The external regenerative resistance is too high.	Check the regenerative resistance.	Change the regenerative resistance to a correct value or use an External Regenerative Resistor of an appropriate capacity.	*3
	A failure occurred in the SERVOPACK.	–	The SERVOPACK may be faulty. Replace the SERVOPACK.	–

Continued on next page.

Continued from previous page.

Alarm Number: Alarm Name	Possible Cause	Confirmation	Correction	Reference
A.330: Main Circuit Power Supply Wiring Error (Detected when the main circuit power supply is turned ON.)	The regenerative resistor was disconnected when the SERVOPACK power supply voltage was high.	Measure the resistance of the regenerative resistor using a measuring instrument.	If you are using the regenerative resistor built into the SERVOPACK, replace the SERVOPACK. If you are using an External Regenerative Resistor, replace the External Regenerative Resistor.	–
	DC power was supplied when an AC power supply input was specified in the settings.	Check the power supply to see if it is a DC power supply.	Correct the power supply setting to match the actual power supply.	page 5-14
	AC power was supplied when a DC power supply input was specified in the settings.	Check the power supply to see if it is an AC power supply.	Correct the power supply setting to match the actual power supply.	
	Pn600 (Regenerative Resistor Capacity) is not set to 0 and an External Regenerative Resistor is not connected to one of the following SERVOPACKs: SGD7S-R70A, -R90A, -1R6A, -2R8A, -R70F, -R90F, -2R1F, or -2R8F.	Check to see if an External Regenerative Resistor is connected and check the setting of Pn600.	Connect an External Regenerative Resistor, or if an External Regenerative Resistor is not required, set Pn600 to 0.	page 4-22, page 5-58
	A failure occurred in the SERVOPACK.	–	The SERVOPACK may be faulty. Replace the SERVOPACK.	–

Continued on next page.

Continued from previous page.

Alarm Number: Alarm Name	Possible Cause	Confirmation	Correction	Reference
A.400: Overvoltage (Detected in the main circuit power supply section of the SERVOPACK.)	The power supply voltage exceeded the specified range.	Measure the power supply voltage.	Set the AC/DC power supply voltage within the specified range.	–
	The power supply is not stable or was influenced by a lightning surge.	Measure the power supply voltage.	Improve the power supply conditions, install a surge absorber, and then turn the power supply OFF and ON again. If the alarm still occurs, the SERVOPACK may be faulty. Replace the SERVOPACK.	–
	The voltage for AC power supply was too high during acceleration or deceleration.	Check the power supply voltage and the speed and torque during operation.	Set the AC power supply voltage within the specified range.	–
	The external regenerative resistance is too high for the operating conditions.	Check the operating conditions and the regenerative resistance.	Select a regenerative resistance value that is appropriate for the operating conditions and load.	*3
	The moment of inertia ratio or mass ratio exceeded the allowable value.	Check to see if the moment of inertia ratio or mass ratio is within the allowable range.	Increase the deceleration time, or reduce the load.	–
	A failure occurred in the SERVOPACK.	–	While the main circuit power supply is OFF, turn the control power supply to the SERVOPACK OFF and ON again. If the alarm still occurs, the SERVOPACK may be faulty. Replace the SERVOPACK.	–

Continued on next page.

Continued from previous page.

Alarm Number: Alarm Name	Possible Cause	Confirmation	Correction	Reference
A.410: Undervoltage (Detected in the main circuit power supply section of the SERVOPACK.)	The power supply voltage went below the specified range.	Measure the power supply voltage.	Set the power supply voltage within the specified range.	–
	The power supply voltage dropped during operation.	Measure the power supply voltage.	Increase the power supply capacity.	–
	A momentary power interruption occurred.	Measure the power supply voltage.	If you have changed the setting of Pn509 (Momentary Power Interruption Hold Time), decrease the setting.	page 6-13
	The SERVOPACK fuse is blown out.	–	Replace the SERVOPACK and connect a reactor to the DC reactor terminals (⊖1 and ⊖2) on the SERVOPACK.	–
	A failure occurred in the SERVOPACK.	–	The SERVOPACK may be faulty. Replace the SERVOPACK.	–
	The jumper between the DC Reactor terminals (⊖1 and ⊖2) was removed or there is faulty contact.	–	Correct the wiring between the DC Reactor terminals.	–
	The cable between the DC Reactor and SERVOPACK is not wired correctly or there is a faulty contact.			
A.510: Overspeed (The motor exceeded the maximum speed.)	The order of phases U, V, and W in the motor wiring is not correct.	Check the wiring of the Servomotor.	Make sure that the Servomotor is correctly wired.	–
	A reference value that exceeded the overspeed detection level was input.	Check the input reference.	Reduce the reference value. Or, adjust the gain.	page 6-17
	The motor exceeded the maximum speed.	Check the waveform of the motor speed.	Reduce the speed reference input gain and adjust the servo gain. Or, reconsider the operating conditions.	
	A failure occurred in the SERVOPACK.	–	The SERVOPACK may be faulty. Replace the SERVOPACK.	–
A.511: Encoder Output Pulse Overspeed	The encoder output pulse frequency exceeded the limit.	Check the encoder output pulse setting.	Decrease the setting of Pn212 (Number of Encoder Output Pulses) or Pn281 (Encoder Output Resolution).	page 6-53
	The encoder output pulse frequency exceeded the limit because the motor speed was too high.	Check the encoder output pulse setting and the motor speed.	Reduce the motor speed.	–

Continued on next page.

Continued from previous page.

Alarm Number: Alarm Name	Possible Cause	Confirmation	Correction	Reference
A.520: Vibration Alarm	Abnormal oscillation was detected in the motor speed.	Check for abnormal motor noise, and check the speed and torque waveforms during operation.	Reduce the motor speed. Or, reduce the setting of Pn100 (Speed Loop Gain).	page 8-76
	The setting of Pn103 (Moment of Inertia Ratio) is greater than the actual moment of inertia or was greatly changed.	Check the moment of inertia ratio or mass ratio.	Set Pn103 (Moment of Inertia Ratio) to an appropriate value.	page 8-16
	The vibration detection level (Pn312 or Pn384) is not suitable.	Check that the vibration detection level (Pn312 or Pn384) is suitable.	Set a suitable vibration detection level (Pn312 or Pn384).	page 6-99
A.521: Autotuning Alarm (Vibration was detected while executing the custom tuning, Easy FFT, or the tuning-less function.)	The Servomotor vibrated considerably while performing the tuning-less function.	Check the waveform of the motor speed.	Reduce the load so that the moment of inertia ratio is within the allowable value. Or increase the load level or reduce the rigidity level in the tuning-less level settings.	page 8-13
	The Servomotor vibrated considerably while performing custom tuning or Easy FFT.	Check the waveform of the motor speed.	Check the operating procedure of corresponding function and implement corrections.	page 8-42, page 8-95
A.550: Maximum Speed Setting Error	The setting of Pn385 (Maximum Motor Speed) is greater than the maximum speed.	Check the setting of Pn385, and the upper limits of the maximum motor speed setting and the encoder output resolution setting.	Set Pn385 to a value that does not exceed the maximum motor speed.	page 6-16
A.710: Instantaneous Overload A.720: Continuous Overload	The wiring is not correct or there is a faulty connection in the motor or encoder wiring.	Check the wiring.	Make sure that the Servomotor and encoder are correctly wired.	page 4-25
	Operation was performed that exceeded the overload protection characteristics.	Check the motor overload characteristics and Run command.	Reconsider the load and operating conditions. Or, increase the motor capacity.	–
	An excessive load was applied during operation because the Servomotor was not driven due to mechanical problems.	Check the operation reference and motor speed.	Correct the mechanical problem.	–
	There is an error in the setting of Pn282 (Linear Encoder Scale Pitch).	Check the setting of Pn282.	Correct the setting of Pn282.	page 5-19
	There is an error in the setting of Pn080 = n.□□X□ (Motor Phase Sequence Selection).	Check the setting of Pn080 = n.□□X□.	Set Pn080 = n.□□X□ to an appropriate value.	page 5-24
	A failure occurred in the SERVOPACK.	–	The SERVOPACK may be faulty. Replace the SERVOPACK.	–

Continued on next page.

Continued from previous page.

Alarm Number: Alarm Name	Possible Cause	Confirmation	Correction	Reference
A.730 and A.731: Dynamic Brake Overload (An excessive power consumption by the dynamic brake was detected.)	The Servomotor was rotated by an external force.	Check the operation status.	Implement measures to ensure that the motor will not be rotated by an external force.	–
	When the Servomotor was stopped with the dynamic brake, the rotational or linear kinetic energy exceeded the capacity of the dynamic brake resistor.	Check the power consumed by the DB resistor to see how frequently the DB is being used.	Reconsider the following: • Reduce the Servomotor command speed. • Decrease the moment of inertia ratio or mass ratio. • Reduce the frequency of stopping with the dynamic brake.	–
	A failure occurred in the SERVOPACK.	–	The SERVOPACK may be faulty. Replace the SERVOPACK.	–
A.740: Inrush Current Limiting Resistor Overload (The main circuit power supply was frequently turned ON and OFF.)	The allowable frequency of the inrush current limiting resistor was exceeded when the main circuit power supply was turned ON and OFF.	–	Reduce the frequency of turning the main circuit power supply ON and OFF.	–
	A failure occurred in the SERVOPACK.	–	The SERVOPACK may be faulty. Replace the SERVOPACK.	–
A.7A1: Internal Temperature Error 1 (Control Board Temperature Error)	The surrounding air temperature is too high.	Check the surrounding air temperature using a thermometer. Or, check the operating status with the SERVOPACK installation environment monitor.	Decrease the surrounding temperature by improving the SERVOPACK installation conditions.	page 3-7
	An overload alarm was reset by turning OFF the power supply too many times.	Check the alarm display to see if there is an overload alarm.	Change the method for resetting the alarm.	–
	There was an excessive load or operation was performed that exceeded the regenerative processing capacity.	Use the accumulated load ratio to check the load during operation, and use the regenerative load ratio to check the regenerative processing capacity.	Reconsider the load and operating conditions.	–
	The SERVOPACK installation orientation is not correct or there is insufficient space around the SERVOPACK.	Check the SERVOPACK installation conditions.	Install the SERVOPACK according to specifications.	page 3-3, page 3-6
	A failure occurred in the SERVOPACK.	–	The SERVOPACK may be faulty. Replace the SERVOPACK.	–

Continued on next page.

Continued from previous page.

Alarm Number: Alarm Name	Possible Cause	Confirmation	Correction	Reference
A.7A2: Internal Temperature Error 2 (Power Board Temperature Error)	The surrounding air temperature is too high.	Check the surrounding air temperature using a thermometer. Or, check the operating status with the SERVOPACK installation environment monitor.	Decrease the surrounding temperature by improving the SERVOPACK installation conditions.	page 3-7
	An overload alarm was reset by turning OFF the power supply too many times.	Check the alarm display to see if there is an overload alarm.	Change the method for resetting the alarm.	–
	There was an excessive load or operation was performed that exceeded the regenerative processing capacity.	Use the accumulated load ratio to check the load during operation, and use the regenerative load ratio to check the regenerative processing capacity.	Reconsider the load and operating conditions.	–
	The SERVOPACK installation orientation is not correct or there is insufficient space around the SERVOPACK.	Check the SERVOPACK installation conditions.	Install the SERVOPACK according to specifications.	page 3-3, page 3-6
	A failure occurred in the SERVOPACK.	–	The SERVOPACK may be faulty. Replace the SERVOPACK.	–
A.7A3: Internal Temperature Sensor Error (An error occurred in the temperature sensor circuit.)	A failure occurred in the SERVOPACK.	–	The SERVOPACK may be faulty. Replace the SERVOPACK.	–
A.7Ab: SERVOPACK Built-in Fan Stopped	The fan inside the SERVOPACK stopped.	Check for foreign matter inside the SERVOPACK.	Remove foreign matter from the SERVOPACK. If the alarm still occurs, the SERVOPACK may be faulty. Replace the SERVOPACK.	–
A.810: Encoder Backup Alarm (Detected at the encoder, but only when an absolute encoder is used.)	The power to the absolute encoder was turned ON for the first time.	Check to see if the power supply was turned ON for the first time.	Set up the encoder.	page 5-52
	The Encoder Cable was disconnected and then connected again.	Check to see if the power supply was turned ON for the first time.	Check the encoder connection and set up the encoder.	
	Power is not being supplied both from the control power supply (+5 V) from the SERVOPACK and from the battery power supply.	Check the encoder connector battery and the connector status.	Replace the battery or implement similar measures to supply power to the encoder, and set up the encoder.	
	A failure occurred in the absolute encoder.	–	If the alarm still occurs after setting up the encoder again, replace the Servomotor.	–
	A failure occurred in the SERVOPACK.	–	The SERVOPACK may be faulty. Replace the SERVOPACK.	–

Continued on next page.

Continued from previous page.

Alarm Number: Alarm Name	Possible Cause	Confirmation	Correction	Reference
A.820: Encoder Checksum Alarm (Detected at the encoder.)	A failure occurred in the encoder.	–	■ When Using an Absolute Encoder Set up the encoder again. If the alarm still occurs, the Servomotor may be faulty. Replace the Servomotor. ■ When Using a Single-turn Absolute Encoder or Incremental Encoder • The Servomotor may be faulty. Replace the Servomotor. • The linear encoder may be faulty. Replace the linear encoder.	page 5-52
	A failure occurred in the SERVOPACK.	–	The SERVOPACK may be faulty. Replace the SERVOPACK.	–
A.830: Encoder Battery Alarm (The absolute encoder battery voltage was lower than the specified level.)	The battery connection is faulty or a battery is not connected.	Check the battery connection.	Correct the battery connection.	page 4-26
	The battery voltage is lower than the specified value (2.7 V).	Measure the battery voltage.	Replace the battery.	page 12-3
	A failure occurred in the SERVOPACK.	–	The SERVOPACK may be faulty. Replace the SERVOPACK.	–
A.840: Encoder Data Alarm (Detected at the encoder.)	The encoder malfunctioned.	–	Turn the power supply to the SERVOPACK OFF and ON again. If the alarm still occurs, the Servomotor or linear encoder may be faulty. Replace the Servomotor or linear encoder.	–
	An error occurred in reading data from the linear encoder.	–	The linear encoder is not mounted within an appropriate tolerance. Correct the mounting of the linear encoder.	–
	Excessive speed occurred in the linear encoder.	–	Control the motor speed within the range specified by the linear encoder manufacturer and then turn ON the control power supply.	–
	The encoder malfunctioned due to noise.	–	Correct the wiring around the encoder by separating the Encoder Cable from the Servomotor Main Circuit Cable or by grounding the encoder.	–
	The polarity sensor is not wired correctly.	Check the wiring of the polarity sensor.	Correct the wiring of the polarity sensor.	–
	The polarity sensor failed.	–	Replace the polarity sensor.	–

Continued on next page.

Continued from previous page.

Alarm Number: Alarm Name	Possible Cause	Confirmation	Correction	Reference
A.850: Encoder Overspeed (Detected at the encoder when the control power supply is turned ON.)	Rotary Servomotor: The Servomotor speed was 200 min^{-1} or higher when the control power supply was turned ON.	Check the motor speed when the power supply is turned ON.	Reduce the Servomotor speed to a value less than 200 min^{-1}, and turn ON the control power supply.	–
	Linear Servomotor: The Servomotor exceeded the specified speed when the control power supply was turned ON.	Check the motor speed when the power supply is turned ON.	Control the motor speed within the range specified by the linear encoder manufacturer and then turn ON the control power supply.	–
	A failure occurred in the encoder.	–	Turn the power supply to the SERVOPACK OFF and ON again. If the alarm still occurs, the Servomotor or linear encoder may be faulty. Replace the Servomotor or linear encoder.	–
	A failure occurred in the SERVOPACK.	–	Turn the power supply to the SERVOPACK OFF and ON again. If the alarm still occurs, the SERVOPACK may be faulty. Replace the SERVOPACK.	–
A.860: Encoder Overheated (Detected when a Rotary Servomotor, Absolute Linear Encoder, or Direct Drive Servomotor is connected. However, this alarm is not detected for SGMCS Servomotors.) (Detected at the encoder.)	The surrounding air temperature around the Servomotor is too high.	Measure the surrounding air temperature around the Servomotor.	Reduce the surrounding air temperature of the Servomotor to 40°C or less.	–
	The Servomotor load is greater than the rated load.	Use the accumulated load ratio to check the load.	Operate the Servo Drive so that the motor load remains within the specified range.	page 9-4
	A failure occurred in the encoder.	–	Turn the power supply to the SERVOPACK OFF and ON again. If the alarm still occurs, the Servomotor or absolute linear encoder may be faulty. Replace the Servomotor or absolute linear encoder.	–
	A failure occurred in the SERVOPACK.	–	Turn the power supply to the SERVOPACK OFF and ON again. If the alarm still occurs, the SERVOPACK may be faulty. Replace the SERVOPACK.	–

Continued on next page.

Continued from previous page.

Alarm Number: Alarm Name	Possible Cause	Confirmation	Correction	Reference
A.861: Motor Overheated	The surrounding temperature around the Servomotor is too high.	Measure the surrounding temperature around the Servomotor.	Reduce the surrounding air temperature of the Servomotor to 40°C or less.	–
	The motor load is greater than the rated load.	Check the load with the accumulated load ratio on the Motion Monitor Tab Page on the SigmaWin+.	Operate the Servo Drive so that the motor load remains within the specified range.	page 9-4
	A failure occurred in the Serial Converter Unit.	–	Turn the power supply to the SERVOPACK OFF and ON again. If the alarm still occurs, the Serial Converter Unit may be faulty. Replace the Serial Converter Unit.	–
	A failure occurred in the SERVOPACK.	–	Turn the power supply to the SERVOPACK OFF and ON again. If the alarm still occurs, the SERVOPACK may be faulty. Replace the SERVOPACK.	–
A.862: Overheat Alarm	The surrounding temperature is too high.	Check the surrounding temperature using a thermometer.	Lower the surrounding temperature by improving the installation conditions of the Linear Servomotor or the machine.	–
	The overheat protection input signal line is disconnected or short-circuited.	Check the input voltage with the overheat protection input information on the Motion Monitor Tab Page on the SigmaWin+.	Repair the line for the overheat protection input signal.	–
	An overload alarm was reset by turning OFF the power supply too many times.	Check the alarm display to see if there is an overload alarm.	Change the method for resetting the alarm.	–
	Operation was performed under an excessive load.	Use the accumulated load ratio to check the load during operation.	Reconsider the load and operating conditions.	–
	A failure occurred in the SERVOPACK.	–	The SERVOPACK may be faulty. Replace the SERVOPACK.	–
	The temperature detection circuit in the Linear Servomotor is faulty or the sensor attached to the machine is faulty.	–	The temperature detection circuit in the Linear Servomotor may be faulty or the sensor attached to the machine may be faulty. Replace the Linear Servomotor or repair the sensor attached to the machine.	–
A.890: Encoder Scale Error	A failure occurred in the linear encoder.	–	The linear encoder may be faulty. Replace the linear encoder.	–
A.891: Encoder Module Error	A failure occurred in the linear encoder.	–	Turn the power supply to the SERVOPACK OFF and ON again. If the alarm still occurs, the linear encoder may be faulty. Replace the linear encoder.	–

Continued on next page.

Continued from previous page.

Alarm Number: Alarm Name	Possible Cause	Confirmation	Correction	Reference
A.8A0: External Encoder Error	Setting the origin of the absolute linear encoder failed because the motor moved.	Before you set the origin, use the fully-closed feedback pulse counter to confirm that the motor is not moving.	The motor must be stopped while setting the origin position.	page 5-55
	A failure occurred in the external encoder.	–	Replace the external encoder.	–
A.8A1: External Encoder Module Error	A failure occurred in the external encoder.	–	Replace the external encoder.	–
	A failure occurred in the Serial Converter Unit.	–	Replace the Serial Converter Unit.	–
A.8A2: External Incremental Encoder Sensor Error	A failure occurred in the external encoder.	–	Replace the external encoder.	–
A.8A3: External Absolute Encoder Position Error	A failure occurred in the external absolute encoder.	–	The external absolute encoder may be faulty. Refer to the encoder manufacturer's instruction manual for corrections.	–
A.8A5: External Encoder Overspeed	An overspeed error was detected in the external encoder.	Check the maximum speed of the external encoder.	Keep the external encoder below its maximum speed.	–
A.8A6: External Encoder Overheated	An overheating error was detected in the external encoder.	–	Replace the external encoder.	–
A.b10: Speed Reference A/D Error (Detected when the servo is turned ON.)	A malfunction occurred in the speed reference input section.	–	Reset the alarm and restart operation.	page 12-41
	A failure occurred in the SERVOPACK.	–	Turn the power supply to the SERVOPACK OFF and ON again. If the alarm still occurs, the SERVOPACK may be faulty. Replace the SERVOPACK.	–
A.b11: Speed Reference A/D Data Error	A malfunction occurred in the speed reference input section.	–	Reset the alarm and restart operation.	page 12-41
	A failure occurred in the SERVOPACK.	–	Turn the power supply to the SERVOPACK OFF and ON again. If the alarm still occurs, the SERVOPACK may be faulty. Replace the SERVOPACK.	–
A.b20: Torque Reference A/D Error (Detected when the servo is turned ON.)	A malfunction occurred in the reading section for the torque reference input.	–	Reset the alarm and restart operation.	page 12-41
	A failure occurred in the SERVOPACK.	–	Turn the power supply to the SERVOPACK OFF and ON again. If the alarm still occurs, the SERVOPACK may be faulty. Replace the SERVOPACK.	–

Continued on next page.

Continued from previous page.

Alarm Number: Alarm Name	Possible Cause	Confirmation	Correction	Reference
A.b33: Current Detection Error 3	A failure occurred in the current detection circuit.	–	Turn the power supply to the SERVOPACK OFF and ON again. If the alarm still occurs, the SERVOPACK may be faulty. Replace the SERVOPACK.	–
A.bC0: System Alarm 10	A failure occurred in the SERVOPACK.	–	Turn the power supply to the SERVOPACK OFF and ON again. If the alarm still occurs, the SERVOPACK may be faulty. Replace the SERVOPACK.	–
A.bF0: System Alarm 0	A failure occurred in the SERVOPACK.	–	Turn the power supply to the SERVOPACK OFF and ON again. If the alarm still occurs, the SERVOPACK may be faulty. Replace the SERVOPACK.	–
A.bF1: System Alarm 1	A failure occurred in the SERVOPACK.	–	Turn the power supply to the SERVOPACK OFF and ON again. If the alarm still occurs, the SERVOPACK may be faulty. Replace the SERVOPACK.	–
A.bF2: System Alarm 2	A failure occurred in the SERVOPACK.	–	Turn the power supply to the SERVOPACK OFF and ON again. If the alarm still occurs, the SERVOPACK may be faulty. Replace the SERVOPACK.	–
A.bF3: System Alarm 3	A failure occurred in the SERVOPACK.	–	Turn the power supply to the SERVOPACK OFF and ON again. If the alarm still occurs, the SERVOPACK may be faulty. Replace the SERVOPACK.	–
A.bF4: System Alarm 4	A failure occurred in the SERVOPACK.	–	Turn the power supply to the SERVOPACK OFF and ON again. If the alarm still occurs, the SERVOPACK may be faulty. Replace the SERVOPACK.	–
A.bF5: System Alarm 5	A failure occurred in the SERVOPACK.	–	Turn the power supply to the SERVOPACK OFF and ON again. If the alarm still occurs, the SERVOPACK may be faulty. Replace the SERVOPACK.	–
A.bF6: System Alarm 6	A failure occurred in the SERVOPACK.	–	Turn the power supply to the SERVOPACK OFF and ON again. If the alarm still occurs, the SERVOPACK may be faulty. Replace the SERVOPACK.	–
A.bF7: System Alarm 7	A failure occurred in the SERVOPACK.	–	Turn the power supply to the SERVOPACK OFF and ON again. If the alarm still occurs, the SERVOPACK may be faulty. Replace the SERVOPACK.	–

Continued on next page.

Continued from previous page.

Alarm Number: Alarm Name	Possible Cause	Confirmation	Correction	Reference
A.bF8: System Alarm 8	A failure occurred in the SERVOPACK.	–	Turn the power supply to the SERVOPACK OFF and ON again. If the alarm still occurs, the SERVOPACK may be faulty. Replace the SERVOPACK.	–
A.C10: Servomotor Out of Control (Detected when the servo is turned ON.)	The order of phases U, V, and W in the motor wiring is not correct.	Check the Servomotor wiring.	Make sure that the Servomotor is correctly wired.	–
	There is an error in the setting of Pn080 = n.□□X□ (Motor Phase Sequence Selection).	Check the setting of Pn080 = n.□□X□.	Set Pn080 = n.□□X□ to an appropriate value.	page 5-24
	A failure occurred in the encoder.	–	If the motor wiring is correct and the alarm still occurs after turning the power supply OFF and ON again, the Servomotor or linear encoder may be faulty. Replace the Servomotor or linear encoder.	–
	A failure occurred in the SERVOPACK.	–	Turn the power supply to the SERVOPACK OFF and ON again. If the alarm still occurs, the SERVOPACK may be faulty. Replace the SERVOPACK.	–
A.C20: Phase Detection Error	The linear encoder signal level is too low.	Check the voltage of the linear encoder signal.	Fine-tune the mounting of the scale head. Or, replace the linear encoder.	–
	The count-up direction of the linear encoder does not match the forward direction of the Moving Coil in the motor.	Check the setting of Pn080 = n.□□X□ (Motor Phase Sequence Selection). Check the installation orientation for the linear encoder and Moving Coil.	Change the setting of Pn080 = n.□□X□. Correctly reinstall the linear encoder or Moving Coil.	page 5-24
	The polarity sensor signal is being affected by noise.	–	Correct the FG wiring. Implement countermeasures against noise for the polarity sensor wiring.	–
	The setting of Pn282 (Linear Encoder Scale Pitch) is not correct.	Check the setting of Pn282 (Linear Encoder Scale Pitch).	Check the specifications of the linear encoder and set a correct value.	page 5-19
A.C21: Polarity Sensor Error	The polarity sensor is protruding from the Magnetic Way of the motor.	Check the polarity sensor.	Correctly reinstall the Moving Coil or Magnetic Way of the motor.	–
	The polarity sensor is not wired correctly.	Check the wiring of the polarity sensor.	Correct the wiring of the polarity sensor.	–
	The polarity sensor failed.	–	Replace the polarity sensor.	–
A.C22: Phase Information Disagreement	The SERVOPACK phase information is different from the linear encoder phase information.	–	Perform polarity detection.	page 5-30

Continued on next page.

Continued from previous page.

Alarm Number: Alarm Name	Possible Cause	Confirmation	Correction	Reference
A.C50: Polarity Detection Failure	The parameter settings are not correct.	Check the linear encoder specifications and feedback signal status.	The settings of Pn282 (Linear Encoder Scale Pitch) and Pn080 = n.□□X□ (Motor Phase Sequence Selection) may not match the installation. Set the parameters to correct values.	page 5-19, page 5-24
	There is noise on the scale signal.	Check to make sure that the frame grounds of the Serial Converter Unit and Servomotor are connected to the FG terminal on the SERVOPACK and that the FG terminal on the SERVOPACK is connected to the frame ground on the power supply. And, confirm that the shield is properly processed on the Linear Encoder Cable. Check to see if the detection reference is repeatedly output in one direction.	Implement appropriate countermeasures against noise for the Linear Encoder Cable.	–
	An external force was applied to the Moving Coil of the motor.	–	The polarity cannot be properly detected if the detection reference is 0 and the speed feedback is not 0 because of an external force, such as cable tension, applied to the Moving Coil. Implement measures to reduce the external force so that the speed feedback goes to 0. If the external force cannot be reduced, increase the setting of Pn481 (Polarity Detection Speed Loop Gain).	–
	The linear encoder resolution is too low.	Check the linear encoder scale pitch to see if it is within 100 μm.	If the linear encoder scale pitch is 100 μm or higher, the SERVOPACK cannot detect the correct speed feedback. Use a linear encoder scale pitch with higher resolution. (We recommend a pitch of 40 μm or less.) Or, increase the setting of Pn485 (Polarity Detection Reference Speed). However, increasing the setting of Pn485 will increase the Servomotor movement range that is required for polarity detection.	–

Continued on next page.

Continued from previous page.

Alarm Number: Alarm Name	Possible Cause	Confirmation	Correction	Reference
A.C51: Overtravel Detected during Polarity Detection	The overtravel signal was detected during polarity detection.	Check the overtravel position.	Wire the overtravel signals. Execute polarity detection at a position where an overtravel signal would not be detected.	page 4-39
A.C52: Polarity Detection Not Completed	The servo was turned ON under the following circumstances. • Before polarity detection was completed • Before /P-DET was input	–	Input the /P-DET signal.	page 5-29
A.C53: Out of Range of Motion for Polarity Detection	The travel distance exceeded the setting of Pn48E (Polarity Detection Range) in the middle of detection.	–	Increase the setting of Pn48E (Polarity Detection Range). Or, increase the setting of Pn481 (Polarity Detection Speed Loop Gain).	–
A.C54: Polarity Detection Failure 2	An external force was applied to the Servomotor.	–	Increase the setting of Pn495 (Polarity Detection Confirmation Force Reference). Increase the setting of Pn498 (Polarity Detection Allowable Error Range). Increasing the allowable error will also increase the motor temperature.	–
A.C80: Encoder Clear Error or Multiturn Limit Setting Error	A failure occurred in the encoder.	–	Turn the power supply to the SERVOPACK OFF and ON again. If the alarm still occurs, the Servomotor or linear encoder may be faulty. Replace the Servomotor or linear encoder.	–
	A failure occurred in the SERVOPACK.	–	Turn the power supply to the SERVOPACK OFF and ON again. If the alarm still occurs, the SERVOPACK may be faulty. Replace the SERVOPACK.	–

Continued on next page.

Continued from previous page.

Alarm Number: Alarm Name	Possible Cause	Confirmation	Correction	Reference
A.C90: Encoder Communications Error	There is a faulty contact in the connector or the connector is not wired correctly for the encoder.	Check the condition of the encoder connector.	Reconnect the encoder connector and check the encoder wiring.	page 4-25
	There is a cable disconnection or short-circuit in the encoder. Or, the cable impedance is outside the specified values.	Check the condition of the Encoder Cable.	Use the Encoder Cable within the specified specifications.	–
	One of the following has occurred: corrosion caused by improper temperature, humidity, or gas, a short-circuit caused by entry of water drops or cutting oil, or faulty contact in connector caused by vibration.	Check the operating environment.	Improve the operating environment, and replace the cable. If the alarm still occurs, replace the SERVOPACK.	page 3-2
	A malfunction was caused by noise.	–	Correct the wiring around the encoder by separating the Encoder Cable from the Servomotor Main Circuit Cable or by grounding the encoder.	page 4-5
	A failure occurred in the SERVOPACK.	–	Connect the Servomotor to another SERVOPACK, and turn ON the control power supply. If no alarm occurs, the SERVOPACK may be faulty. Replace the SERVOPACK.	–
	A failure occurred in the encoder.	–	Connect the Servomotor to another SERVOPACK, and turn ON the control power supply. If the alarm occurs, the Servomotor may be faulty. Replace the Servomotor.	–
A.C91: Encoder Communications Position Data Acceleration Rate Error	Noise entered on the signal lines because the Encoder Cable is bent or the sheath is damaged.	Check the condition of the Encoder Cable and connectors.	Check the Encoder Cable to see if it is installed correctly.	page 4-8
	The Encoder Cable is bundled with a high-current line or installed near a high-current line.	Check the installation condition of the Encoder Cable.	Confirm that there is no surge voltage on the Encoder Cable.	–
	There is variation in the FG potential because of the influence of machines on the Servomotor side, such as a welder.	Check the installation condition of the Encoder Cable.	Properly ground the machine to separate it from the FG of the encoder.	–

Continued on next page.

Continued from previous page.

Alarm Number: Alarm Name	Possible Cause	Confirmation	Correction	Reference
A.C92: Encoder Communications Timer Error	Noise entered on the signal line from the encoder.	–	Implement countermeasures against noise for the encoder wiring.	page 4-5
	Excessive vibration or shock was applied to the encoder.	Check the operating conditions.	Reduce machine vibration. Correctly install the Servomotor or linear encoder.	–
	A failure occurred in the encoder.	–	Turn the power supply to the SERVOPACK OFF and ON again. If the alarm still occurs, the Servomotor or linear encoder may be faulty. Replace the Servomotor or linear encoder.	–
	A failure occurred in the SERVOPACK.	–	Turn the power supply to the SERVOPACK OFF and ON again. If the alarm still occurs, the SERVOPACK may be faulty. Replace the SERVOPACK.	–
A.CA0: Encoder Parameter Error	A failure occurred in the encoder.	–	Turn the power supply to the SERVOPACK OFF and ON again. If the alarm still occurs, the Servomotor or linear encoder may be faulty. Replace the Servomotor or linear encoder.	–
	A failure occurred in the SERVOPACK.	–	Turn the power supply to the SERVOPACK OFF and ON again. If the alarm still occurs, the SERVOPACK may be faulty. Replace the SERVOPACK.	–

Continued on next page.

Continued from previous page.

Alarm Number: Alarm Name	Possible Cause	Confirmation	Correction	Reference
A.Cb0: Encoder Echo-back Error	The encoder is wired incorrectly or there is faulty contact.	Check the wiring of the encoder.	Make sure that the encoder is correctly wired.	page 4-25
	The specifications of the Encoder Cable are not correct and noise entered on it.	–	Use a shielded twisted-pair wire cable or a screened twisted-pair cable with conductors of at least 0.12 mm^2.	–
	The Encoder Cable is too long and noise entered on it.	–	• Rotary Servomotors: The Encoder Cable wiring distance must be 50 m max. • Linear Servomotors: The Encoder Cable wiring distance must be 20 m max.	–
	There is variation in the FG potential because of the influence of machines on the Servomotor side, such as a welder.	Check the condition of the Encoder Cable and connectors.	Properly ground the machine to separate it from the FG of the encoder.	–
	Excessive vibration or shock was applied to the encoder.	Check the operating conditions.	Reduce machine vibration. Correctly install the Servomotor or linear encoder.	–
	A failure occurred in the encoder.	–	Turn the power supply to the SERVOPACK OFF and ON again. If the alarm still occurs, the Servomotor or linear encoder may be faulty. Replace the Servomotor or linear encoder.	–
	A failure occurred in the SERVOPACK.	–	Turn the power supply to the SERVOPACK OFF and ON again. If the alarm still occurs, the SERVOPACK may be faulty. Replace the SERVOPACK.	–
A.CC0: Multiturn Limit Disagreement	When using a Direct Drive Servomotor, the setting of Pn205 (Multiturn Limit) does not agree with the encoder.	Check the setting of Pn205.	Correct the setting of Pn205 (0 to 65,535).	page 6-85
	The multiturn limit of the encoder is different from that of the SERVOPACK. Or, the multiturn limit of the SERVOPACK has been changed.	Check the setting of Pn205 in the SERVOPACK.	Change the setting if the alarm occurs.	page 6-85
	A failure occurred in the SERVOPACK.	–	Turn the power supply to the SERVOPACK OFF and ON again. If the alarm still occurs, the SERVOPACK may be faulty. Replace the SERVOPACK.	–

Continued on next page.

Continued from previous page.

Alarm Number: Alarm Name	Possible Cause	Confirmation	Correction	Reference
A.CF1: Reception Failed Error in Feedback Option Module Communications	The cable between the Serial Converter Unit and SERVOPACK is not wired correctly or there is a faulty contact.	Check the wiring of the external encoder.	Correctly wire the cable between the Serial Converter Unit and SERVOPACK.	page 4-27
	A specified cable is not being used between Serial Converter Unit and SERVOPACK.	Check the wiring specifications of the external encoder.	Use a specified cable.	–
	The cable between the Serial Converter Unit and SERVOPACK is too long.	Measure the length of the cable that connects the Serial Converter Unit.	The length of the cable between the Serial Converter Unit and SERVOPACK must be 20 m or less.	–
	The sheath on cable between the Serial Converter Unit and SERVOPACK is broken.	Check the cable that connects the Serial Converter Unit.	Replace the cable between the Serial Converter Unit and SERVOPACK.	–
A.CF2: Timer Stopped Error in Feedback Option Module Communications	Noise entered the cable between the Serial Converter Unit and SERVOPACK.	–	Correct the wiring around the Serial Converter Unit, e.g., separate I/O signal lines from the Main Circuit Cables or ground.	–
	A failure occurred in the Serial Converter Unit.	–	Replace the Serial Converter Unit.	–
	A failure occurred in the SERVOPACK.	–	Replace the SERVOPACK.	–
A.d00: Position Deviation Overflow (The setting of Pn520 (Position Deviation Overflow Alarm Level) was exceeded by the position deviation.)	The Servomotor U, V, and W wiring is not correct.	Check the wiring of the Servomotor's Main Circuit Cables.	Make sure that there are no faulty contacts in the wiring for the Servomotor and encoder.	–
	The frequency of the position reference pulse is too high.	Reduce the reference pulse frequency and try operating the SERVOPACK.	Reduce the position reference pulse frequency or the reference acceleration rate, or reconsider the electronic gear ratio.	page 5-47
	The acceleration of the position reference is too high.	Reduce the reference acceleration and try operating the SERVOPACK.	Apply smoothing, i.e., by using Pn216 (Position Reference Acceleration/Deceleration Time Constant).	page 6-35
	The setting of Pn520 (Position Deviation Overflow Alarm Level) is too low for the operating conditions.	Check Pn520 (Position Deviation Overflow Alarm Level) to see if it is set to an appropriate value.	Optimize the setting of Pn520.	page 8-8
	A failure occurred in the SERVOPACK.	–	Turn the power supply to the SERVOPACK OFF and ON again. If the alarm still occurs, the SERVOPACK may be faulty. Replace the SERVOPACK.	–

Continued on next page.

Continued from previous page.

Alarm Number: Alarm Name	Possible Cause	Confirmation	Correction	Reference
A.d01: Position Deviation Overflow Alarm at Servo ON	The servo was turned ON after the position deviation exceeded the setting of Pn526 (Position Deviation Overflow Alarm Level at Servo ON) while the servo was OFF.	Check the position deviation while the servo is OFF.	Set the position deviation to be cleared while the servo is OFF. Optimize the setting of Pn526 (Position Deviation Overflow Alarm Level at Servo ON).	page 8-8
A.d02: Position Deviation Overflow Alarm for Speed Limit at Servo ON	If position deviation remains in the deviation counter, the setting of Pn529 or Pn584 (Speed Limit Level at Servo ON) limits the speed when the servo is turned ON. This alarm occurs if reference pulses are input and the setting of Pn520 (Position Deviation Overflow Alarm Level) is exceeded.	–	Set the position deviation to be cleared while the servo is OFF. Optimize the setting of Pn520 (Position Deviation Overflow Alarm Level). Or, adjust the setting of Pn529 or Pn584 (Speed Limit Level at Servo ON).	
A.d10: Motor-Load Position Deviation Overflow	The motor direction and external encoder installation orientation are backward.	Check the motor direction and the external encoder installation orientation.	Install the external encoder in the opposite direction, or change the setting of Pn002 = n.X□□□ (External Encoder Usage) to reverse the direction.	page 10-6
	There is an error in the connection between the load (e.g., stage) and external encoder coupling.	Check the coupling of the external encoder.	Check the mechanical coupling.	–
A.d30: Position Data Overflow	The position data exceeded ±1,879,048,192.	Check the input reference pulse counter.	Reconsider the operating specifications.	–
A.E71: Safety Option Module Detection Failure	There is a faulty connection between the SERVOPACK and the Safety Option Module.	Check the connection between the SERVOPACK and the Safety Option Module.	Correctly connect the Safety Option Module.	–
	The Safety Option Module was disconnected.	–	Execute Fn014 (Reset Option Module Configuration Error) from the Digital Operator or SigmaWin+ and then turn the power supply to the SERVOPACK OFF and ON again.	page 12-44
	A failure occurred in the Safety Option Module.	–	Replace the Safety Option Module.	–
	A failure occurred in the SERVOPACK.	–	Replace the SERVOPACK.	–

Continued on next page.

Continued from previous page.

Alarm Number: Alarm Name	Possible Cause	Confirmation	Correction	Reference
A.E72: Feedback Option Module Detection Failure	There is a faulty connection between the SERVOPACK and the Feedback Option Module.	Check the connection between the SERVOPACK and the Feedback Option Module.	Correctly connect the Feedback Option Module.	–
	The Feedback Option Module was disconnected.	–	Reset the Option Module configuration error and turn the power supply to the SERVOPACK OFF and ON again.	page 12-44
	A failure occurred in the Feedback Option Module.	–	Replace the Feedback Option Module.	–
	A failure occurred in the SERVOPACK.	–	Replace the SERVOPACK.	–
A.E74: Unsupported Safety Option Module	A failure occurred in the Safety Option Module.	–	Replace the Safety Option Module.	–
	An unsupported Safety Option Module was connected.	Refer to the catalog of the connected Safety Option Module.	Connect a compatible Safety Option Module.	–
A.Eb1: Safety Function Signal Input Timing Error	The delay between activation of the /HWBB1 and /HWBB2 input signals for the HWBB was ten second or longer.	Measure the time delay between the /HWBB1 and /HWBB2 signals.	The output signal circuits or devices for /HWBB1 and /HWBB2 or the SERVOPACK input signal circuits may be faulty. Alternatively, the input signal cables may be disconnected. Check to see if any of these items are faulty or have been disconnected.	–
	A failure occurred in the SERVOPACK.	–	Replace the SERVOPACK.	–
A.EC8: Gate Drive Error 1 (An error occurred in the gate drive circuit.) A.EC9: Gate Drive Error 2 (An error occurred in the gate drive circuit.)	A failure occurred in the SERVOPACK.	–	Turn the power supply to the SERVOPACK OFF and ON again. If the alarm still occurs, the SERVOPACK may be faulty. Replace the SERVOPACK.	–

Continued on next page.

Continued from previous page.

Alarm Number: Alarm Name	Possible Cause	Confirmation	Correction	Reference
A.F10: Power Supply Line Open Phase (The voltage was low for more than one second for phase R, S, or T when the main power supply was ON.)	The three-phase power supply wiring is not correct.	Check the power supply wiring.	Make sure that the power supply is correctly wired.	page 4-11
	The three-phase power supply is unbalanced.	Measure the voltage for each phase of the three-phase power supply.	Balance the power supply by changing phases.	–
	A single-phase power supply was input without specifying a single-phase AC power supply input (Pn00B = n.□1□□).	Check the power supply and the parameter setting.	Match the parameter setting to the power supply.	page 4-11
	A failure occurred in the SERVOPACK.	–	Turn the power supply to the SERVOPACK OFF and ON again. If the alarm still occurs, the SERVOPACK may be faulty. Replace the SERVOPACK.	–
FL-1*5: System Alarm	A failure occurred in the SERVOPACK.	–	Turn the power supply to the SERVOPACK OFF and ON again. If the alarm still occurs, the SERVOPACK may be faulty. Replace the SERVOPACK.	–
FL-2*5: System Alarm				
FL-3*5: System Alarm				
FL-4*5: System Alarm				
FL-5*5: System Alarm				
FL-6*5: System Alarm				
FL-7*5: System Alarm				
CPF00: Digital Operator Communications Error 1	There is a faulty connection between the Digital Operator and the SERVOPACK.	Check the connector contact.	Disconnect the connector and insert it again. Or, replace the cable.	–
	A malfunction was caused by noise.	–	Keep the Digital Operator or the cable away from sources of noise.	–
CPF01: Digital Operator Communications Error 2	A failure occurred in the Digital Operator.	–	Disconnect the Digital Operator and then connect it again. If the alarm still occurs, the Digital Operator may be faulty. Replace the Digital Operator.	–
	A failure occurred in the SERVOPACK.	–	Turn the power supply to the SERVOPACK OFF and ON again. If the alarm still occurs, the SERVOPACK may be faulty. Replace the SERVOPACK.	–

*1. Detection Conditions
- Rotary Servomotor
  If either of the following conditions is detected, an alarm will occur.
  - $\text{Pn533 [min}^{-1}] \times \dfrac{\text{Encoder resolution}}{6 \times 10^5} \leq \dfrac{\text{Pn20E}}{\text{Pn210}}$
  - $\text{Maximum motor speed [min}^{-1}] \times \dfrac{\text{Encoder resolution}}{\text{Approx. } 3.66 \times 10^{12}} \geq \dfrac{\text{Pn20E}}{\text{Pn210}}$

- Linear Servomotor
  If either of the following conditions is detected, an alarm will occur.
  - $\frac{\text{Pn585 [mm/s]}}{\text{Linear encoder pitch [μm]}} \times \frac{\text{Resolution of Serial Converter Unit}}{10} \leq \frac{\text{Pn20E}}{\text{Pn210}}$
  - $\frac{\text{Pn385 [100 mm/s]}}{\text{Linear encoder pitch [μm]}} \times \frac{\text{Resolution of Serial Converter Unit}}{\text{Approx. } 6.10 \times 10^5} \geq \frac{\text{Pn20E}}{\text{Pn210}}$

*2. Detection Conditions
- Rotary Servomotor
  If either of the following conditions is detected, an alarm will occur.
  - $\text{Rated motor speed [min}^{-1}\text{]} \times 1/3 \times \frac{\text{Encoder resolution}}{6 \times 10^5} \leq \frac{\text{Pn20E}}{\text{Pn210}}$
  - $\text{Maximum motor speed [min}^{-1}\text{]} \times \frac{\text{Encoder resolution}}{\text{Approx. } 3.66 \times 10^{12}} \geq \frac{\text{Pn20E}}{\text{Pn210}}$
- Linear Servomotor
  If either of the following conditions is detected, an alarm will occur.
  - $\frac{\text{Rated motor speed [mm/s]} \times 1/3}{\text{Linear encoder pitch [μm]}} \times \frac{\text{Resolution of Serial Converter Unit}}{10} \leq \frac{\text{Pn20E}}{\text{Pn210}}$
  - $\frac{\text{Pn385 [100 mm/s]}}{\text{Linear encoder pitch [μm]}} \times \frac{\text{Resolution of Serial Converter Unit}}{\text{Approx. } 6.10 \times 10^5} \geq \frac{\text{Pn20E}}{\text{Pn210}}$

*3. Refer to the following manual for details.
Σ-7-Series Peripheral Device Selection Manual (Manual No.: SIEP S800001 32)

*4. The SERVOPACK will fail if the External Regenerative Resistor or Regenerative Resistor Unit is connected while the jumper is connected between the B2 and B3 terminals.

*5. These alarms are not stored in the alarm history. They are only displayed on the panel display.

12.2.3 Resetting Alarms

If there is an ALM (Servo Alarm) signal, use one of the following methods to reset the alarm after eliminating the cause of the alarm.

The /ALM-RST (Alarm Reset) signal will not always reset encoder-related alarms. If you cannot reset an alarm with the /ALM-RST signal, turn OFF the control power supply to reset it.

> **Important**
> Be sure to eliminate the cause of an alarm before you reset the alarm.
> If you reset the alarm and continue operation without eliminating the cause of the alarm, it may result in damage to the equipment or fire.

Resetting Alarms with the /ALM-RST (Alarm Reset Input) Signal

Type	Signal	Connector Pin No.	Name
Input	/ALM-RST	CN1-44	Alarm Reset

Note: Use Pn50B = n.□□X□ (/ALM-RST (Alarm Reset) Signal Allocation) to allocate the /ALM-RST signal to other connector pins. Refer to the following section for details.
6.1.1 Input Signal Allocations on page 6-5

Resetting Alarms with the SigmaWin+

Use the following procedure to reset alarms with the SigmaWin+.

1. Click the Servo Drive Button in the workspace of the Main Window of the SigmaWin+.
2. Select **Display Alarm** in the Menu Dialog Box.
   The Alarm Display Dialog Box will be displayed.

3. Click the **Reset axes** Button.

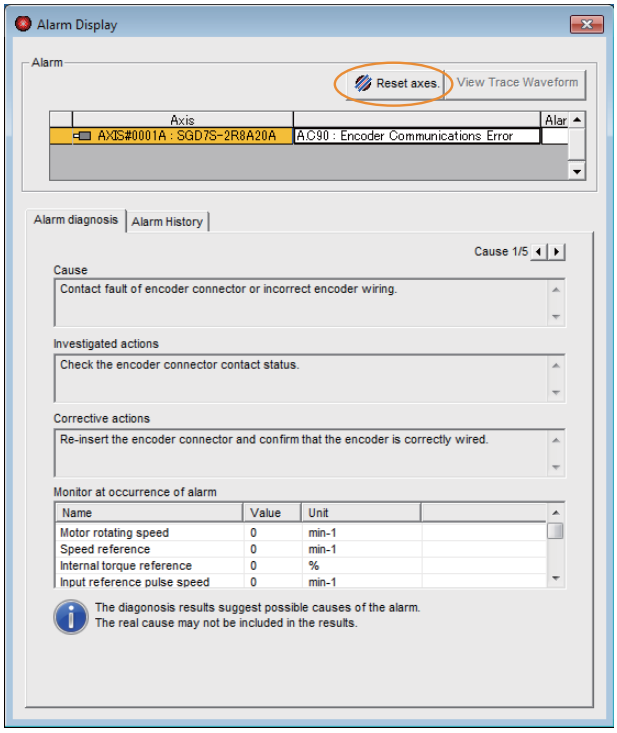

The alarm will be reset, and the alarm display will be cleared.

This concludes the procedure to reset alarms.

Resetting Alarms Using the Panel Operator

Simultaneously press the **UP** and the **DOWN** Keys on the Panel Operator.

Resetting Alarms Using the Digital Operator

Press the **ALARM RESET** Key on the Digital Operator. Refer to the following manual for details on resetting alarms.

Σ-7-Series Digital Operator Operating Manual (Manual No.: SIEP S800001 33)

12.2.4 Displaying the Alarm History

The alarm history displays up to the last ten alarms that have occurred in the SERVOPACK.

Preparations

No preparations are required.

Applicable Tools

The following table lists the tools that you can use to display the alarm history.

Tool	Fn No./Function Name	Reference
Panel Operator	Fn000	*13.4.1 Display Alarm History (Fn000)* on page 13-12
Digital Operator	Fn000	Σ-7-Series Digital Operator Operating Manual (Manual No.: SIEP S800001 33)
SigmaWin+	***Troubleshooting - Display Alarm***	*Operating Procedure* on page 12-43

Operating Procedure

Use the following procedure to display the alarm history.

1. Click the Servo Drive Button in the workspace of the Main Window of the SigmaWin+.

2. Select **Display Alarm** in the Menu Dialog Box.
   The Alarm Display Dialog Box will be displayed.

3. Click the **Alarm History** Tab.
   The following display will appear and you can check the alarms that occurred in the past.

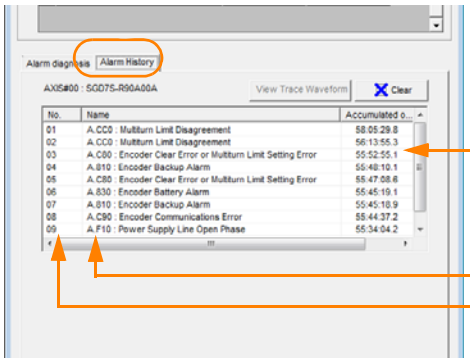

Accumulated operation time
Total operation time to the point at which the alarm occurred is displayed in increments of 100 ms from when the control power supply and main circuit power supply turned ON.
For 24-hour, 365-day operation, measurements are possible for approximately 13 years.

Alarm number: Alarm name

Alarms in order of occurrence
(Older alarms have higher numbers.)

Information

1. If the same alarm occurs consecutively within one hour, it is not saved in the alarm history. If it occurs after an hour or more, it is saved.
2. You can clear the alarm history by clicking the **Clear** Button. The alarm history is not cleared when alarms are reset or when the SERVOPACK main circuit power is turned OFF.

This concludes the procedure to display the alarm history.

12.2.5 Clearing the Alarm History

You can clear the alarm history that is recorded in the SERVOPACK.

The alarm history is not cleared when alarms are reset or when the SERVOPACK main circuit power is turned OFF. You must perform the following procedure.

Preparations

Always check the following before you clear the alarm history.

- The parameters must not be write prohibited.

Applicable Tools

The following table lists the tools that you can use to clear the alarm history.

Tool	Fn No./Function Name	Reference
Panel Operator	Fn006	*13.4.6 Clear Alarm History (Fn006)* on page 13-16
Digital Operator	Fn006	Σ-7-Series Digital Operator Operating Manual (Manual No.: SIEP S800001 33)
SigmaWin+	***Troubleshooting - Display Alarm***	*Operating Procedure* on page 12-44

Operating Procedure

Use the following procedure to reset the alarm history.

1. Click the Servo Drive Button in the workspace of the Main Window of the SigmaWin+.
2. Select **Display Alarm** in the Menu Dialog Box.
   The Alarm Display Dialog Box will be displayed.
3. Click the **Alarm History** Tab.
4. Click the **Clear** Button.
   The alarm history will be cleared.

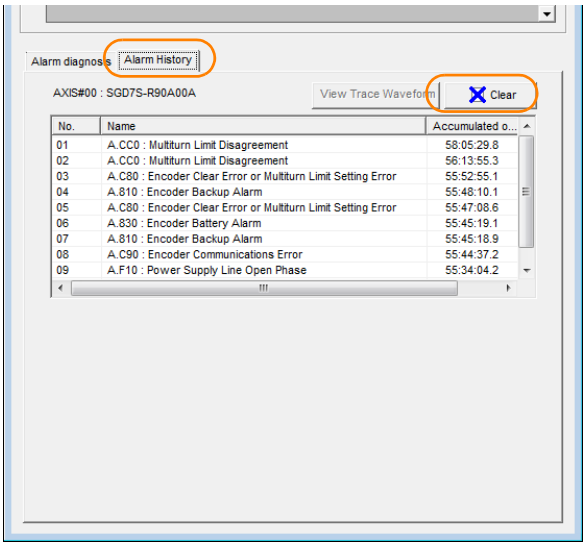

This concludes the procedure to reset the alarm history.

12.2.6 Resetting Alarms Detected in Option Modules

If any Option Modules are attached to the SERVOPACK, the SERVOPACK detects the presence and models of the connected Option Modules. If it finds any errors, it outputs alarms.

You can delete those alarms with this operation.

Information
- This operation is the only way to reset alarms for Option Modules. The alarms are not reset when you reset other alarms or when you turn OFF the power supply to the SERVOPACK.
- Always remove the cause of an alarm before you reset the alarm.

Preparations

Always check the following before you clear an alarm detected in an Option Module.
- The parameters must not be write prohibited.

Applicable Tools

The following table lists the tools that you can use to reset Option Module configuration errors.

Tool	Fn No./Function Name	Reference
Panel Operator	Fn014	*13.4.19 Reset Option Module Configuration Error (Fn014)* on page 13-27
Digital Operator	Fn014	Σ-7-Series Digital Operator Operating Manual (Manual No.: SIEP S800001 33)
SigmaWin+	***Troubleshooting - Display Alarm***	*Operating Procedure* on page 12-45

Operating Procedure

Use the following procedure to reset alarms detected in Option Modules.

1. Click the Servo Drive Button in the workspace of the Main Window of the SigmaWin+.

2. Select **Display Alarm** in the Menu Dialog Box.
   The Display Alarm Dialog Box will be displayed.

3. Click the **Reset axes** Button.

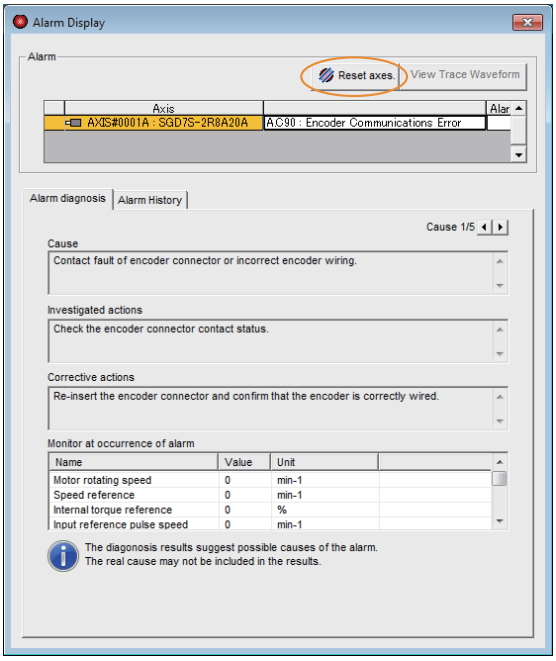

   The Reset Option Module Configuration Error Dialog Box will be displayed.

4. Select the **Clear** Check Box for the Option Module for which to reset the alarm and then click the **Execute** Button.

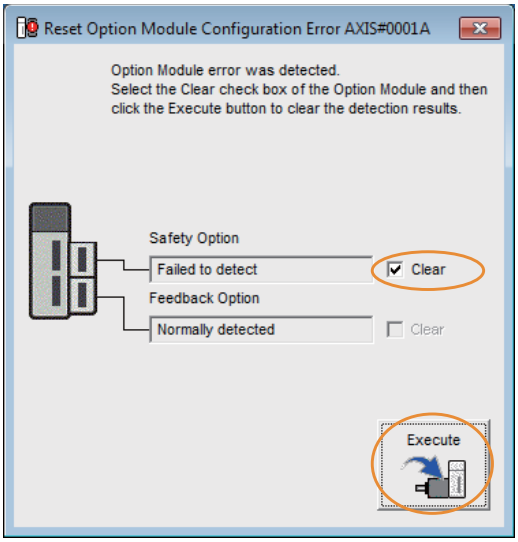

5. Read the precaution and then click the **OK** Button.

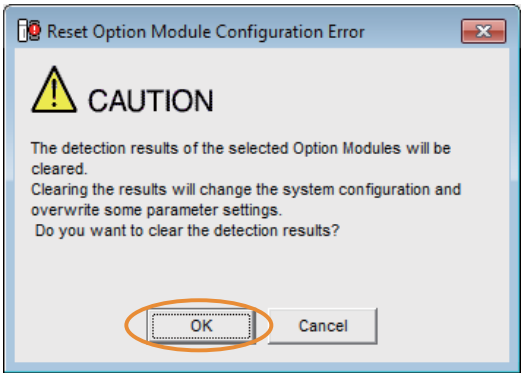

6. Read the precaution and then click the **OK** Button.

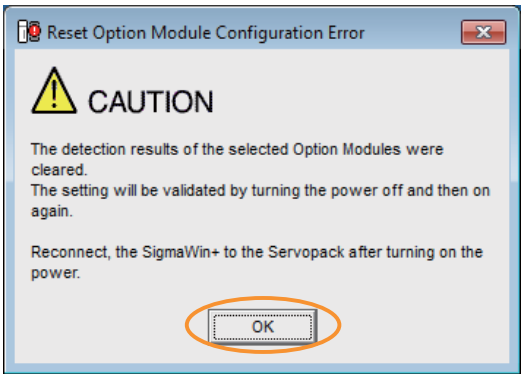

7. Turn the power supply to the SERVOPACK OFF and ON again.

This concludes the procedure to reset alarms detected in Option Modules.

12.2.7 Resetting Motor Type Alarms

The SERVOPACK automatically determines the type of Servomotor that is connected to it. If the type of Servomotor that is connected is changed, an A.070 alarm (Motor Type Change Detected) will occur the next time the SERVOPACK is started. If an A.070 alarm occurs, you must set the parameters to match the new type of Servomotor.

An A.070 alarm is reset by executing the Reset Motor Type Alarm utility function.

Information

1. This utility function is the only way to reset an A.070 alarm (Motor Type Change Detected). The errors are not reset when you reset alarms or turn OFF the power supply to the SERVOPACK.
2. If an A.070 alarm occurs, first set the parameters according to the newly connected Servomotor type and then execute the Reset Motor Type Alarm utility function.

Preparations

Always check the following before you reset a motor type alarm.

- The parameters must not be write prohibited.

Applicable Tools

The following table lists the tools that you can use to clear the motor type alarm.

Tool	Fn No./Function Name	Reference
Panel Operator	Fn021	*13.4.24 Resetting Motor Type Alarms (Fn021)* on page 13-29
Digital Operator	Fn021	Σ-7-Series Digital Operator Operating Manual (Manual No.: SIEP S800001 33)
SigmaWin+	***Troubleshooting - Reset Motor Type Alarm***	*Operating Procedure* on page 12-47

Operating Procedure

Use the following procedure to reset Motor Type alarm.

1. Click the Servo Drive Button in the workspace of the Main Window of the SigmaWin+.
2. Select **Reset Motor Type Alarm** in the Menu Dialog Box.
   The Reset Motor Type Alarm Dialog Box will be displayed.
3. Click the **Reset** Button.

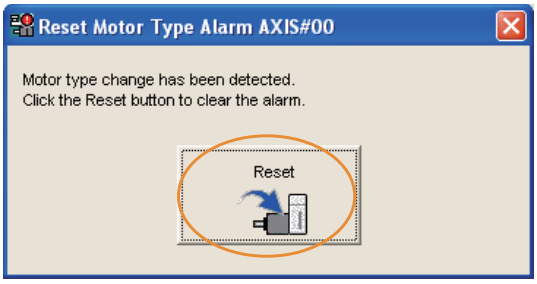

4. Read the precaution and then click the **OK** Button.

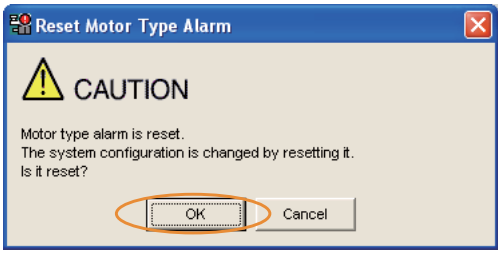

5. Read the precaution and then click the **OK** Button.

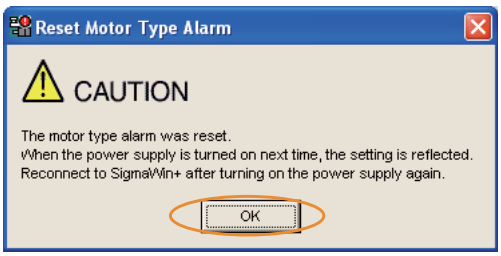

6. Turn the power supply to the SERVOPACK OFF and ON again.

This concludes the procedure to reset Motor Type alarms.

12.3 Warning Displays

If a warning occurs in the SERVOPACK, a warning number will be displayed on the panel display. Warnings are displayed to warn you before an alarm occurs.

This section provides a list of warnings and the causes of and corrections for warnings.

12.3.1 List of Warnings

The list of warnings gives the warning name, warning meaning, and warning code output in order of the warning numbers.

Warning Number	Warning Name	Meaning	Warning Code Output		
			ALO1	ALO2	ALO3
A.900	Position Deviation Overflow	The position deviation exceeded the percentage set with the following formula: (Pn520 × Pn51E/100)	H	H	H
A.901	Position Deviation Overflow Alarm at Servo ON	The position deviation when the servo was turned ON exceeded the percentage set with the following formula: (Pn526 × Pn528/100)	H	H	H
A.910	Overload	This warning occurs before an overload alarm (A.710 or A.720) occurs. If the warning is ignored and operation is continued, an alarm may occur.	L	H	H
A.911	Vibration	Abnormal vibration was detected during motor operation. The detection level is the same as A.520. Set whether to output an alarm or a warning by setting Pn310 (Vibration Detection Selection).	L	H	H
A.912	Internal Temperature Warning 1 (Control Board Temperature Error)	The surrounding air temperature of the control PCB is abnormal.	H	L	H
A.913	Internal Temperature Warning 2 (Power Board Temperature Error)	The surrounding air temperature of the power PCB is abnormal.	H	L	H
A.920	Regenerative Overload	This warning occurs before an A.320 alarm (Regenerative Overload) occurs. If the warning is ignored and operation is continued, an alarm may occur.	H	L	H
A.921	Dynamic Brake Overload	This warning occurs before an A.731 alarm (Dynamic Brake Overload) occurs. If the warning is ignored and operation is continued, an alarm may occur.	H	L	H
A.923	SERVOPACK Built-in Fan Stopped	The fan inside the SERVOPACK stopped.	H	L	H
A.930	Absolute Encoder Battery Error	This warning occurs when the voltage of absolute encoder's battery is low.	L	L	H
A.93B	Overheat Warning	The input voltage (temperature) for the overheat protection input (TH) signal exceeded the setting of Pn61C (Overheat Warning Level).	L	L	H
A.941	Change of Parameters Requires Restart	Parameters have been changed that require the power supply to be turned OFF and ON again.	H	H	L
A.942	Speed Ripple Compensation Information Disagreement	The speed ripple compensation information stored in the encoder does not agree with the speed ripple compensation information stored in the SERVOPACK.	H	H	L

Continued on next page.

Continued from previous page.

Warning Number	Warning Name	Meaning	Warning Code Output		
			ALO1	ALO2	ALO3
A.971	Undervoltage	This warning occurs before an A.410 alarm (Undervoltage) occurs. If the warning is ignored and operation is continued, an alarm may occur.	L	L	L
A.9A0	Overtravel	Overtravel was detected while the servo was ON.	H	L	L
A.9b0	Preventative Maintenance Warning	One of the consumable parts has reached the end of its service life.	H	L	H

Note: 1. A warning code is not output unless you set Pn001 to n.1□□□ (Output both alarm codes and warning codes).
2. Use Pn008 = n.□X□□ (Warning Detection Selection) to control warning detection.
However, the following warnings are not affected by the setting of Pn008 = n.□X□□ and other parameter settings are required in addition to Pn008 = n.□X□□.

Warning	Parameters That Must Be Set to Select Warning Detection	Reference
A.911	Pn310 = n.□□□X (Vibration Detection Selection)	page 6-99
A.923	– (Not affected by the setting of Pn008 = n.□X□□.)	–
A.930	Pn008 = n.□□□X (Low Battery Voltage Alarm/Warning Selection)	page 12-3
A.942	Pn423 = n.□□X□ (Speed Ripple Compensation Information Disagreement Warning Detection Selection)	page 8-60
A.971	Pn008 = n.□□X□ (Function Selection for Undervoltage) (Not affected by the setting of Pn008 = n.□X□□.)	page 6-14
A.9A0	Pn00D = n.X□□□ (Overtravel Warning Detection Selection) (Not affected by the setting of Pn008 = n.□X□□.)	page 5-34
A.9b0	Pn00F = n.□□□X (Preventative Maintenance Warning Selection)	page 9-17

12.3.2 Troubleshooting Warnings

The causes of and corrections for the warnings are given in the following table. Contact your Yaskawa representative if you cannot solve a problem with the correction given in the table.

Warning Number: Warning Name	Possible Cause	Confirmation	Correction	Reference
A.900: Position Deviation Overflow	The Servomotor U, V, and W wiring is not correct.	Check the wiring of the Servomotor's Main Circuit Cables.	Make sure that there are no faulty connections in the wiring for the Servomotor and encoder.	–
	A SERVOPACK gain is too low.	Check the SERVOPACK gains.	Increase the servo gain, e.g., by using autotuning without a host reference.	page 8-24
	The frequency of the position reference pulse is too high.	Reduce the reference pulse frequency and try operating the SERVOPACK.	Reduce the position reference pulse frequency or the reference acceleration rate, or reconsider the electronic gear ratio.	page 5-47
	The acceleration of the position reference is too high.	Reduce the reference acceleration and try operating the SERVOPACK.	Apply smoothing, i.e., by using Pn216 (Position Reference Acceleration/ Deceleration Time Constant).	page 6-30
	The excessive position deviation alarm level (Pn520 × Pn51E/100) is too low for the operating conditions.	Check excessive position deviation alarm level (Pn520 × Pn51E/ 100) to see if it is set to an appropriate value.	Optimize the settings of Pn520 and Pn51E.	page 8-8
	A failure occurred in the SERVOPACK.	–	Turn the power supply to the SERVOPACK OFF and ON again. If the alarm still occurs, the SERVOPACK may be faulty. Replace the SERVOPACK.	–
A.901: Position Deviation Overflow Alarm at Servo ON	The position deviation when the servo was turned ON exceeded the percentage set with the following formula: (Pn526 × Pn528/ 100)	–	Set the position deviation to be cleared while the servo is OFF. Optimize the setting of Pn528 (Position Deviation Overflow Warning Level at Servo ON).	page 8-10

Continued on next page.

Continued from previous page.

Warning Number: Warning Name	Possible Cause	Confirmation	Correction	Reference
A.910: Overload (warning before an A.710 or A.720 alarm occurs)	The wiring is not correct or there is a faulty connection in the motor or encoder wiring.	Check the wiring.	Make sure that the Servomotor and encoder are correctly wired.	–
	Operation was performed that exceeded the overload protection characteristics.	Check the motor overload characteristics and Run command.	Reconsider the load and operating conditions. Or, increase the motor capacity.	–
	An excessive load was applied during operation because the Servomotor was not driven because of mechanical problems.	Check the operation reference and motor speed.	Remove the mechanical problem.	–
	The overload warning level (Pn52B) is not suitable.	Check that the overload warning level (Pn52B) is suitable.	Set a suitable overload warning level (Pn52B).	page 5-44
	A failure occurred in the SERVOPACK.	–	The SERVOPACK may be faulty. Replace the SERVOPACK.	–
A.911: Vibration	Abnormal vibration was detected during motor operation.	Check for abnormal motor noise, and check the speed and torque waveforms during operation.	Reduce the motor speed. Or, reduce the servo gain with custom tuning.	page 8-42
	The setting of Pn103 (Moment of Inertia Ratio) is greater than the actual moment of inertia or was greatly changed.	Check the moment of inertia ratio or mass ratio.	Set Pn103 (Moment of Inertia Ratio) to an appropriate value.	page 8-16
	The vibration detection level (Pn312 or Pn384) is not suitable.	Check that the vibration detection level (Pn312 or Pn384) is suitable.	Set a suitable vibration detection level (Pn312 or Pn384).	page 6-99

Continued on next page.

Continued from previous page.

Warning Number: Warning Name	Possible Cause	Confirmation	Correction	Reference
A.912: Internal Temperature Warning 1 (Control Board Temperature Error)	The surrounding temperature is too high.	Check the surrounding temperature using a thermometer. Or, check the operating status with the SERVOPACK installation environment monitor.	Decrease the surrounding temperature by improving the SERVOPACK installation conditions.	page 3-7
	An overload alarm was reset by turning OFF the power supply too many times.	Check the alarm display to see if there is an overload alarm.	Change the method for resetting the alarm.	–
	There was an excessive load or operation was performed that exceeded the regenerative processing capacity.	Use the accumulated load ratio to check the load during operation, and use the regenerative load ratio to check the regenerative processing capacity.	Reconsider the load and operating conditions.	–
	The SERVOPACK installation orientation is not correct or there is insufficient space around the SERVOPACK.	Check the SERVOPACK installation conditions.	Install the SERVOPACK according to specifications.	page 3-3, page 3-6
	A failure occurred in the SERVOPACK.	–	The SERVOPACK may be faulty. Replace the SERVOPACK.	–
A.913: Internal Temperature Warning 2 (Power Board Temperature Error)	The surrounding temperature is too high.	Check the surrounding temperature using a thermometer. Or, check the operating status with the SERVOPACK installation environment monitor.	Decrease the surrounding temperature by improving the SERVOPACK installation conditions.	page 3-7
	An overload alarm was reset by turning OFF the power supply too many times.	Check the alarm display to see if there is an overload alarm.	Change the method for resetting the alarm.	–
	There was an excessive load or operation was performed that exceeded the regenerative processing capacity.	Use the accumulated load ratio to check the load during operation, and use the regenerative load ratio to check the regenerative processing capacity.	Reconsider the load and operating conditions.	–
	The SERVOPACK installation orientation is not correct or there is insufficient space around the SERVOPACK.	Check the SERVOPACK installation conditions.	Install the SERVOPACK according to specifications.	page 3-3, page 3-6
	A failure occurred in the SERVOPACK.	–	The SERVOPACK may be faulty. Replace the SERVOPACK.	–

Continued on next page.

Continued from previous page.

Warning Number: Warning Name	Possible Cause	Confirmation	Correction	Reference
A.920: Regenerative Overload (warning before an A.320 alarm occurs)	The power supply voltage exceeded the specified range.	Measure the power supply voltage.	Set the power supply voltage within the specified range.	–
	There is insufficient external regenerative resistance, regenerative resistor capacity, or SERVOPACK capacity, or there has been a continuous regeneration state.	Check the operating conditions or the capacity using the SigmaJunmaSize+ Capacity Selection Software or another means.	Change the regenerative resistance value, regenerative resistance capacity, or SERVOPACK capacity. Reconsider the operating conditions using the SigmaJunmaSize+ Capacity Selection Software or other means.	–
	There was a continuous regeneration state because a negative load was continuously applied.	Check the load applied to the Servomotor during operation.	Reconsider the system including the servo, machine, and operating conditions.	–
A.921: Dynamic Brake Overload (warning before an A.731 alarm occurs)	The Servomotor was rotated by an external force.	Check the operation status.	Implement measures to ensure that the motor will not be rotated by an external force.	–
	When the Servomotor was stopped with the dynamic brake, the rotational or linear kinetic energy exceeded the capacity of the dynamic brake resistor.	Check the power consumed by the DB resistor to see how frequently the DB is being used.	Reconsider the following: • Reduce the Servomotor command speed. • Decrease the moment of inertia or mass. • Reduce the frequency of stopping with the dynamic brake.	–
	A failure occurred in the SERVOPACK.	–	The SERVOPACK may be faulty. Replace the SERVOPACK.	–
A.923: SERVOPACK Built-in Fan Stopped	The fan inside the SERVOPACK stopped.	Check for foreign matter inside the SERVOPACK.	Remove foreign matter from the SERVOPACK. If the alarm still occurs, the SERVOPACK may be faulty. Replace the SERVOPACK.	–
A.930: Absolute Encoder Battery Error (The absolute encoder battery voltage was lower than the specified level.) (Detected only when an absolute encoder is connected.)	The battery connection is faulty or a battery is not connected.	Check the battery connection.	Correct the battery connection.	page 4-26
	The battery voltage is lower than the specified value (2.7 V).	Measure the battery voltage.	Replace the battery.	page 12-3
	A failure occurred in the SERVOPACK.	–	The SERVOPACK may be faulty. Replace the SERVOPACK.	–

Continued on next page.

Continued from previous page.

Warning Number: Warning Name	Possible Cause	Confirmation	Correction	Reference
A.93B: Overheat Warning	The surrounding temperature is too high.	Check the surrounding temperature using a thermometer.	Lower the surrounding temperature by improving the installation conditions of the Linear Servomotor or the machine.	–
	Operation was performed under an excessive load.	Use the accumulated load ratio to check the load during operation.	Reconsider the load and operating conditions.	–
	A failure occurred in the SERVOPACK.	–	The SERVOPACK may be faulty. Replace the SERVOPACK.	–
	The temperature detection circuit in the Linear Servomotor is faulty or the sensor attached to the machine is faulty.	–	The temperature detection circuit in the Linear Servomotor may be faulty or the sensor attached to the machine may be faulty. Replace the Linear Servomotor or repair the sensor attached to the machine.	–
A.941: Change of Parameters Requires Restart	Parameters have been changed that require the power supply to be turned OFF and ON again.	–	Turn the power supply to the SERVOPACK OFF and ON again.	–
A.942: Speed Ripple Compensation Information Disagreement	The speed ripple compensation information stored in the encoder does not agree with the speed ripple compensation information stored in the SERVOPACK.	–	Reset the speed ripple compensation value on the SigmaWin+.	page 8-60
		–	Set Pn423 to n.□□1□ (Do not detect A.942 alarms). However, changing the setting may increase the speed ripple.	page 8-60
		–	Set Pn423 to n.□□□0 (Disable speed ripple compensation). However, changing the setting may increase the speed ripple.	page 8-60
A.971: Undervoltage	For a 200-V SERVOPACK, the AC power supply voltage dropped below 140 V.	Measure the power supply voltage.	Set the power supply voltage within the specified range.	–
	For a 100-V SERVOPACK, the AC power supply voltage dropped below 60 V.	Measure the power supply voltage.	Set the power supply voltage within the specified range.	–
	The power supply voltage dropped during operation.	Measure the power supply voltage.	Increase the power supply capacity.	–
	A momentary power interruption occurred.	Measure the power supply voltage.	If you have changed the setting of Pn509 (Momentary Power Interruption Hold Time), decrease the setting.	page 6-13
	The SERVOPACK fuse is blown out.	–	Replace the SERVOPACK and connect a reactor.	page 4-24
	A failure occurred in the SERVOPACK.	–	The SERVOPACK may be faulty. Replace the SERVOPACK.	–

Continued on next page.

Continued from previous page.

Warning Number: Warning Name	Possible Cause	Confirmation	Correction	Reference
A.9A0: Overtravel (Overtravel status was detected.)	Overtravel was detected while the servo was ON.	Check the status of the overtravel signals on the input signal monitor.	Even if an overtravel signal is not shown by the input signal monitor, momentary overtravel may have been detected. Take the following precautions. • Do not specify movements that would cause overtravel from the host controller. • Check the wiring of the overtravel signals. • Implement countermeasures against noise.	page 5-34
A.9b0: Preventative Maintenance Warning	One of the consumable parts has reached the end of its service life.	–	Replace the part. Contact your Yaskawa representative for replacement.	page 9-17

12.4 Troubleshooting Based on the Operation and Conditions of the Servomotor

This section provides troubleshooting based on the operation and conditions of the Servomotor, including causes and corrections.

Problem	Possible Cause	Confirmation	Correction	Reference
Servomotor Does Not Start	The control power supply is not turned ON.	Measure the voltage between control power supply terminals.	Turn OFF the power supply to the servo system. Correct the wiring so that the control power supply is turned ON.	–
	The main circuit power supply is not turned ON.	Measure the voltage between the main circuit power input terminals.	Turn OFF the power supply to the servo system. Correct the wiring so that the main circuit power supply is turned ON.	–
	The I/O signal connector (CN1) pins are not wired correctly or are disconnected.	Turn OFF the power supply to the servo system. Check the wiring condition of the I/O signal connector (CN1) pins.	Correct the wiring of the I/O signal connector (CN1) pins.	page 4-35, page 9-6
	The wiring for the Servomotor Main Circuit Cables or Encoder Cable is disconnected.	Check the wiring conditions.	Turn OFF the power supply to the servo system. Wire the cable correctly.	–
	There is an overload on the Servomotor.	Operate the Servomotor with no load and check the load status.	Turn OFF the power supply to the servo system. Reduce the load or replace the Servomotor with a Servomotor with a larger capacity.	–
	The type of encoder that is being used does not agree with the setting of Pn002 = n.□X□□ (Encoder Usage).	Check the type of the encoder that is being used and the setting of Pn002 = n.□X□□.	Set Pn002 = n.□X□□ according to the type of the encoder that is being used.	page 6-74
	No speed or position reference is input.	Turn OFF the power supply to the servo system. Check the allocation status of the input signals.	Allocate an input signal so that the speed and position references are input correctly.	page 4-35, page 9-6
	There is a mistake in the input signal allocations (Pn50A to Pn50D, Pn515, and Pn516).	Check the input signal allocations (Pn50A to Pn50D, Pn515, and Pn516).	Correctly allocate the input signals (Pn50A to Pn50D, Pn515, and Pn516).	page 6-5, page 9-6
	The /S-ON (Servo ON) signal is OFF.	Check the settings of Pn50A = n.□□□X (Input Signal Allocation Mode) and Pn50A =n.□□X□ (/S-ON (Servo ON) Signal Allocation).	Set Pn50A = n.□□XX correctly and turn ON the /S-ON signal.	page 5-17, page 9-6
	The function setting of the /P-CON (Proportional Control) signal is not correct.	Check the setting of Pn000 = n.□□X□ (Control Method Selection).	Set the parameter to match the application.	page 5-13
	The SEN input is OFF.	Check the ON/OFF status of the SEN input.	If you are using an absolute encoder, turn ON the SEN signal.	page 6-74, page 9-6
	The reference pulse mode selection is not correct.	Check the setting of Pn200 =n.□□□X (Reference Pulse Form) and the reference pulse form.	Set Pn200 =n.□□□X so that is agrees with the reference pulse form.	page 6-31

Continued on next page.

Continued from previous page.

Problem	Possible Cause	Confirmation	Correction	Reference
Servomotor Does Not Start	Speed control: The speed reference input is not appropriate.	Check between the speed reference input (V-REF) and signal ground (SG) to see if the control method and the input agree.	Correctly set the control method and input method.	page 9-6
	Torque control: The torque reference input is not appropriate.	Check between the torque reference input (T-REF) and signal ground (SG) to see if the control method and the input agree.	Correctly set the control method and input method.	page 9-6
	Position control: The reference pulse input is not appropriate.	Check the setting of Pn200 =n.□□□X (Reference Pulse Form) and the sign and pulse signals.	Correctly set the control method and input method.	page 6-31
	The /CLR (Position Deviation Clear) input signal has not been turned OFF.	Check the /CLR signal (CN1-14 and CN1-15).	Turn OFF the /CLR signal.	page 9-6
	The P-OT (Forward Drive Prohibit) or N-OT (Reverse Drive Prohibit) signal is still OFF.	Check the P-OT and N-OT signals.	Turn ON the P-OT and N-OT signals.	page 9-6
	The safety input signals (/HWBB1 or /HWBB2) were not turned ON.	Check the /HWBB1 and /HWBB2 input signals.	Turn ON the /HWBB1 and /HWBB2 input signals. If you are not using the safety function, connect the Safety Jumper Connector (provided as an accessory) to CN8.	page 9-6
	The FSTP (Forced Stop Input) signal is still OFF.	Check the FSTP signal.	• Turn ON the FSTP signal. • If you will not use the function to force the motor to stop, set Pn516 = n.□□□X (FSTP (Forced Stop Input) Signal Allocation) to disable the signal.	page 9-6
	A failure occurred in the SERVOPACK.	–	Turn OFF the power supply to the servo system. Replace the SERVOPACK.	–
	The polarity detection was not executed.	Check the setting of Pn080 =n.□□□X (Polarity Sensor Selection).	Correct the parameter setting.	page 5-26
		Check the /S-ON (Servo ON) or /P-DET (Polarity Detection) input signal.	• If you are using an incremental linear encoder, turn ON the /S-ON or /P-DET signal. • If you are using an absolute linear encoder, turn OFF the external /S-ON signal and execute polarity detection.	page 5-27

Continued on next page.

Continued from previous page.

Problem	Possible Cause	Confirmation	Correction	Reference
Servomotor Moves Instantaneously, and Then Stops	There is a mistake in the Servomotor wiring.	Turn OFF the power supply to the servo system. Check the wiring.	Wire the Servomotor correctly.	–
	There is a mistake in the wiring of the encoder or Serial Converter Unit.	Turn OFF the power supply to the servo system. Check the wiring.	Wire the Serial Converter Unit correctly.	–
	There is a mistake in the linear encoder wiring.	Turn OFF the power supply to the servo system. Check the wiring.	Wire the cable correctly.	–
	The setting of Pn282 (Linear Encoder Scale Pitch) is not correct.	Check the setting of Pn282.	Correct the setting of Pn282.	page 5-19
	The count-up direction of the linear encoder does not match the forward direction of the Moving Coil in the motor.	Check the directions.	Change the setting of Pn080 = n.□□X□ (Motor Phase Sequence Selection). Place the linear encoder and motor in the same direction.	page 5-24
	Polarity detection was not performed correctly.	Check to see if electrical angle 2 (electrical angle from polarity origin) at any position is between ±10°.	Correct the settings for the polarity detection-related parameters.	–
Servomotor Speed Is Unstable	There is a faulty connection in the Servomotor wiring.	The connector connections for the power line (U, V, and W phases) and the encoder or Serial Converter Unit may be unstable. Turn OFF the power supply to the servo system. Check the wiring.	Tighten any loose terminals or connectors and correct the wiring.	–
Servomotor Moves without a Reference Input	Speed control: The speed reference input is not appropriate.	Check between the speed reference input (V-REF) and signal ground (SG) to see if the control method and the input agree.	Correctly set the control method and input method.	page 9-6
	Torque control: The torque reference input is not appropriate.	Check between the torque reference input (T-REF) and signal ground (SG) to see if the control method and the input agree.	Correctly set the control method and input method.	page 9-6
	The speed reference offset is not correct.	The SERVOPACK offset is adjusted incorrectly.	Adjust the SERVOPACK offset.	page 6-19
	Position control: The reference pulse input is not appropriate.	Check the setting of Pn200 =n.□□□X (Reference Pulse Form) and the sign and pulse signals.	Correctly set the control method and input method.	–
	A failure occurred in the SERVOPACK.	–	Turn OFF the power supply to the servo system. Replace the SERVOPACK.	–
	The count-up direction of the linear encoder does not match the forward direction of the Moving Coil in the motor.	Check the directions.	Change the setting of Pn080 = n.□□X□ (Motor Phase Sequence Selection). Match the linear encoder direction and Servomotor direction.	page 5-24

Continued on next page.

Continued from previous page.

Problem	Possible Cause	Confirmation	Correction	Reference
Servomotor Moves without a Reference Input	Polarity detection was not performed correctly.	Check to see if electrical angle 2 (electrical angle from polarity origin) at any position is between ±10°.	Correct the settings for the polarity detection-related parameters.	–
Dynamic Brake Does Not Operate	The setting of Pn001 = n.□□□X (Motor Stopping Method for Servo OFF and Group 1 Alarms) is not suitable.	Check the setting of Pn001 = n.□□□X.	Set Pn001 = n.□□□X correctly.	–
	The dynamic brake resistor is disconnected.	Check the moment of inertia, motor speed, and dynamic brake frequency of use. If the moment of inertia, motor speed, or dynamic brake frequency of use is excessive, the dynamic brake resistance may be disconnected.	Turn OFF the power supply to the servo system. Replace the SERVOPACK. To prevent disconnection, reduce the load.	–
	There was a failure in the dynamic brake drive circuit.	–	There is a defective component in the dynamic brake circuit. Turn OFF the power supply to the servo system. Replace the SERVOPACK.	–
Abnormal Noise from Servomotor	The Servomotor vibrated considerably while performing the tuning-less function with the default settings.	Check the waveform of the motor speed.	Reduce the load so that the moment of inertia ratio or mass ratio is within the allowable value, or increase the load level or reduce the rigidity level in the tuning-less level settings. If the situation is not improved, disable the tuning-less function (i.e., set Pn170 to n.□□□0) and execute autotuning either with or without a host reference.	page 8-12
	The machine mounting is not secure.	Turn OFF the power supply to the servo system. Check to see if there are any loose mounting screws.	Tighten the mounting screws.	–
		Turn OFF the power supply to the servo system. Check to see if there is misalignment in the coupling.	Align the coupling.	–
		Turn OFF the power supply to the servo system. Check to see if the coupling is balanced.	Balance the coupling.	–
	The bearings are defective.	Turn OFF the power supply to the servo system. Check for noise and vibration around the bearings.	Replace the Servomotor.	–

Continued on next page.

Continued from previous page.

Problem	Possible Cause	Confirmation	Correction	Reference
Abnormal Noise from Servomotor	There is a vibration source at the driven machine.	Turn OFF the power supply to the servo system. Check for any foreign matter, damage, or deformation in the machine's moving parts.	Consult with the machine manufacturer.	–
	Noise interference occurred because of incorrect I/O signal cable specifications.	Turn OFF the power supply to the servo system. Check the I/O signal cables to see if they satisfy specifications. Use shielded twisted-pair cables or screened twisted-pair cables with conductors of at least 0.12 mm^2 (stranded wire).	Use cables that satisfy the specifications.	–
	Noise interference occurred because an I/O signal cable is too long.	Turn OFF the power supply to the servo system. Check the lengths of the I/O signal cables.	The I/O signal cables must be no longer than 3 m.	–
	Noise interference occurred because of incorrect Encoder Cable specifications.	Turn OFF the power supply to the servo system. Check the Encoder Cable to see if it satisfies specifications. Use shielded twisted-pair cables or screened twisted-pair cables with conductors of at least 0.12 mm^2 (stranded wire).	Use cables that satisfy the specifications.	–
	Noise interference occurred because the Encoder Cable is too long.	Turn OFF the power supply to the servo system. Check the length of the Encoder Cable.	• Rotary Servomotors: The Encoder Cable length must be 50 m max. • Linear Servomotors: Make sure that the Serial Converter Unit cable is no longer than 20 m and that the Linear Encoder Cable and the Sensor Cable are no longer than 15 m each.	–
	Noise interference occurred because the Encoder Cable is damaged.	Turn OFF the power supply to the servo system. Check the Encoder Cable to see if it is pinched or the sheath is damaged.	Replace the Encoder Cable and correct the cable installation environment.	–
	The Encoder Cable was subjected to excessive noise interference.	Turn OFF the power supply to the servo system. Check to see if the Encoder Cable is bundled with a high-current line or installed near a high-current line.	Correct the cable layout so that no surge is applied by high-current lines.	–
	There is variation in the FG potential because of the influence of machines on the Servomotor side, such as a welder.	Turn OFF the power supply to the servo system. Check to see if the machines are correctly grounded.	Properly ground the machines to separate them from the FG of the encoder.	–

Continued on next page.

Continued from previous page.

Problem	Possible Cause	Confirmation	Correction	Reference
Abnormal Noise from Servomotor	There is a SERVOPACK pulse counting error due to noise.	Check to see if there is noise interference on the signal line from the encoder.	Turn OFF the power supply to the servo system. Implement counter-measures against noise for the encoder wiring.	–
	The encoder was subjected to excessive vibration or shock.	Turn OFF the power supply to the servo system. Check to see if vibration from the machine occurred. Check the Servomotor installation (mounting surface precision, securing state, and alignment). Check the linear encoder installation (mounting surface precision and securing method).	Reduce machine vibration. Improve the mounting state of the Servomotor or linear encoder.	–
	A failure occurred in the encoder.	–	Turn OFF the power supply to the servo system. Replace the Servomotor.	–
	A failure occurred in the Serial Converter Unit.	–	Turn OFF the power supply to the servo system. Replace the Serial Converter Unit.	–
	A failure occurred in the linear encoder.	–	Turn OFF the power supply to the servo system. Replace the linear encoder.	–
Servomotor Vibrates at Frequency of Approx. 200 to 400 Hz.	The servo gains are not balanced.	Check to see if the servo gains have been correctly tuned.	Perform autotuning without a host reference.	page 8-24
	The setting of Pn100 (Speed Loop Gain) is too high.	Check the setting of Pn100. The default setting is Kv = 40.0 Hz.	Set Pn100 to an appropriate value.	–
	The setting of Pn102 (Position Loop Gain) is too high.	Check the setting of Pn102. The default setting is Kp = 40.0/s.	Set Pn102 to an appropriate value.	–
	The setting of Pn101 (Speed Loop Integral Time Constant) is not appropriate.	Check the setting of Pn101. The default setting is Ti = 20.0 ms.	Set Pn101 to an appropriate value.	–
	The setting of Pn103 (Moment of Inertia Ratio or Mass Ratio) is not appropriate.	Check the setting of Pn103.	Set Pn103 to an appropriate value.	–

Continued on next page.

Continued from previous page.

Problem	Possible Cause	Confirmation	Correction	Reference
Large Motor Speed Overshoot on Starting and Stopping	The servo gains are not balanced.	Check to see if the servo gains have been correctly tuned.	Perform autotuning without a host reference.	page 8-24
	The setting of Pn100 (Speed Loop Gain) is too high.	Check the setting of Pn100. The default setting is Kv = 40.0 Hz.	Set Pn100 to an appropriate value.	–
	The setting of Pn102 (Position Loop Gain) is too high.	Check the setting of Pn102. The default setting is Kp = 40.0/s.	Set Pn102 to an appropriate value.	–
	The setting of Pn101 (Speed Loop Integral Time Constant) is not appropriate.	Check the setting of Pn101. The default setting is Ti = 20.0 ms.	Set Pn101 to an appropriate value.	–
	The setting of Pn103 (Moment of Inertia Ratio or Mass Ratio) is not appropriate.	Check the setting of Pn103.	Set Pn103 to an appropriate value.	–
	The torque reference is saturated.	Check the waveform of the torque reference.	Use the mode switch.	–
	The force limits (Pn483 and Pn484) are set to the default values.	The default values of the force limits are Pn483 = 30% and Pn484 = 30%.	Set Pn483 and Pn484 to appropriate values.	page 6-64
Absolute Encoder Position Deviation Error (The position that was saved in the host controller when the power was turned OFF is different from the position when the power was next turned ON.)	Noise interference occurred because of incorrect Encoder Cable specifications.	Turn OFF the power supply to the servo system. Check the Encoder Cable to see if it satisfies specifications. Use shielded twisted-pair cables or screened twisted-pair cables with conductors of at least 0.12 mm^2 (stranded wire).	Use cables that satisfy the specifications.	–
	Noise interference occurred because the Encoder Cable is too long.	Turn OFF the power supply to the servo system. Check the length of the Encoder Cable.	• Rotary Servomotors: The Encoder Cable length must be 50 m max. • Linear Servomotors: Make sure that the Serial Converter Unit cable is no longer than 20 m and that the Linear Encoder Cable and the Sensor Cable are no longer than 15 m each.	–
	Noise interference occurred because the Encoder Cable is damaged.	Turn OFF the power supply to the servo system. Check the Encoder Cable to see if it is pinched or the sheath is damaged.	Replace the Encoder Cable and correct the cable installation environment.	–
	The Encoder Cable was subject to excessive noise interference.	Turn OFF the power supply to the servo system. Check to see if the Encoder Cable is bundled with a high-current line or installed near a high-current line.	Correct the cable layout so that no surge is applied by high-current lines.	–

Continued on next page.

Continued from previous page.

Problem	Possible Cause	Confirmation	Correction	Reference
Absolute Encoder Position Deviation Error (The position that was saved in the host controller when the power was turned OFF is different from the position when the power was next turned ON.)	There is variation in the FG potential because of the influence of machines on the Servomotor side, such as a welder.	Turn OFF the power supply to the servo system. Check to see if the machines are correctly grounded.	Properly ground the machines to separate them from the FG of the encoder.	–
	There is a SERVOPACK pulse counting error due to noise.	Turn OFF the power supply to the servo system. Check to see if there is noise interference on the I/O signal line from the encoder or Serial Converter Unit.	Implement countermeasures against noise for the encoder or Serial Converter Unit wiring.	–
	The encoder was subjected to excessive vibration or shock.	Turn OFF the power supply to the servo system. Check to see if vibration from the machine occurred. Check the Servomotor installation (mounting surface precision, securing state, and alignment). Check the linear encoder installation (mounting surface precision and securing method).	Reduce machine vibration. Improve the mounting state of the Servomotor or linear encoder.	–
	A failure occurred in the encoder.	–	Turn OFF the power supply to the servo system. Replace the Servomotor or linear encoder.	–
	A failure occurred in the SERVOPACK.	–	Turn OFF the power supply to the servo system. Replace the SERVOPACK.	–
	Host Controller Multiturn Data or Absolute Encoder Position Data Reading Error	Check the error detection section of the host controller.	Correct the error detection section of the host controller.	–
		Check to see if the host controller is executing data parity checks.	Perform parity checks for the multiturn data or absolute encoder position data.	–
		Check for noise interference in the cable between the SERVOPACK and the host controller.	Implement countermeasures against noise and then perform parity checks again for the multiturn data or absolute encoder position data.	–

Continued on next page.

Continued from previous page.

Problem	Possible Cause	Confirmation	Correction	Reference
Overtravel Occurred	The P-OT/N-OT (Forward Drive Prohibit or Reverse Drive Prohibit) signal was input.	Check the external power supply (+24 V) voltage for the input signals.	Correct the external power supply (+24 V) voltage for the input signals.	–
		Check the operating condition of the overtravel limit switches.	Make sure that the overtravel limit switches operate correctly.	–
		Check the wiring of the overtravel limit switches.	Correct the wiring of the overtravel limit switches.	page 5-31
		Check the settings of the overtravel input signal allocations (Pn50A/ Pn50B).	Set the parameters to correct values.	page 5-31
	The P-OT/N-OT (Forward Drive Prohibit or Reverse Drive Prohibit) signal malfunctioned.	Check for fluctuation in the external power supply (+24 V) voltage for the input signals.	Eliminate fluctuation from the external power supply (+24 V) voltage for the input signals.	–
		Check to see if the operation of the overtravel limit switches is unstable.	Stabilize the operating condition of the overtravel limit switches.	–
		Check the wiring of the overtravel limit switches (e.g., check for cable damage and loose screws).	Correct the wiring of the overtravel limit switches.	–
	There is a mistake in the allocation of the P-OT or N-OT (Forward Drive Prohibit or Reverse Drive Prohibit) signal in Pn50A = n.X□□□ or Pn50B = n.□□□X.	Check to see if the P-OT signal is allocated in Pn50A = n.X□□□.	If another signal is allocated in Pn50A =n.X□□□, allocate the P-OT signal instead.	page 5-31
		Check to see if the N-OT signal is allocated in Pn50B = n.□□□X.	If another signal is allocated in Pn50B =n.□□□X, allocate the N-OT signal instead.	
	The selection of the Servomotor stopping method is not correct.	Check the servo OFF stopping method set in Pn001 = n.□□□X or Pn001 = n.□□X□.	Select a Servomotor stopping method other than coasting to a stop.	page 5-33
		Check the torque control stopping method set in Pn001 = n.□□□X or Pn001 = n.□□X□.	Select a Servomotor stopping method other than coasting to a stop.	
Improper Stop Position for Overtravel (OT) Signal	The limit switch position and dog length are not appropriate.	–	Install the limit switch at the appropriate position.	–
	The overtravel limit switch position is too close for the coasting distance.	–	Install the overtravel limit switch at the appropriate position.	–

Continued on next page.

Continued from previous page.

Problem	Possible Cause	Confirmation	Correction	Reference
Position Deviation (without Alarm)	Noise interference occurred because of incorrect Encoder Cable specifications.	Check the Encoder Cable to see if it satisfies specifications. Use shielded twisted-pair cables or screened twisted-pair cables with conductors of at least 0.12 mm^2 (stranded wire).	Use cables that satisfy the specifications.	–
	Noise interference occurred because the Encoder Cable is too long.	Turn OFF the power supply to the servo system. Check the length of the Encoder Cable.	• Rotary Servomotors: The Encoder Cable length must be 50 m max. • Linear Servomotors: Make sure that the Serial Converter Unit cable is no longer than 20 m and that the Linear Encoder Cable and the Sensor Cable are no longer than 15 m each.	–
	Noise interference occurred because the Encoder Cable is damaged.	Turn OFF the power supply to the servo system. Check the Encoder Cable to see if it is pinched or the sheath is damaged.	Replace the Encoder Cable and correct the cable installation environment.	–
	The Encoder Cable was subjected to excessive noise interference.	Turn OFF the power supply to the servo system. Check to see if the Encoder Cable is bundled with a high-current line or installed near a high-current line.	Correct the cable layout so that no surge is applied by high-current lines.	–
	There is variation in the FG potential because of the influence of machines on the Servomotor side, such as a welder.	Turn OFF the power supply to the servo system. Check to see if the machines are correctly grounded.	Properly ground the machines to separate them from the FG of the encoder.	–
	There is a SERVOPACK pulse counting error due to noise.	Turn OFF the power supply to the servo system. Check to see if there is noise interference on the I/O signal line from the encoder or Serial Converter Unit.	Implement countermeasures against noise for the encoder wiring or Serial Converter Unit wiring.	–
	The encoder was subjected to excessive vibration or shock.	Turn OFF the power supply to the servo system. Check to see if vibration from the machine occurred. Check the Servomotor installation (mounting surface precision, securing state, and alignment). Check the linear encoder installation (mounting surface precision and securing method).	Reduce machine vibration. Improve the mounting state of the Servomotor or linear encoder.	–
	The coupling between the machine and Servomotor is not suitable.	Turn OFF the power supply to the servo system. Check to see if position offset occurs at the coupling between machine and Servomotor.	Correctly secure the coupling between the machine and Servomotor.	–

Continued on next page.

Continued from previous page.

Problem	Possible Cause	Confirmation	Correction	Reference
Position Deviation (without Alarm)	Noise interference occurred because of incorrect I/O signal cable specifications.	Turn OFF the power supply to the servo system. Check the I/O signal cables to see if they satisfy specifications. Use shielded twisted-pair cables or screened twisted-pair cables with conductors of at least 0.12 mm^2 (stranded wire).	Use cables that satisfy the specifications.	–
	If reference pulse input multiplication switching is being used, noise may be causing the I/O signals used for this function (/PSEL and /PSELA) to be falsely detected.	Turn OFF the power supply to the servo system. Check the I/O signal cables to see if they satisfy specifications. Use shielded twisted-pair cables or screened twisted-pair cables with conductors of at least 0.12 mm^2 (stranded wire).	Use cables that satisfy the specifications.	–
	Pulses are being lost because the filter for the reference pulse input is not appropriate.	Check the setting of Pn200=n.X□□□(Filter Selection).	Set the parameters to correct values.	page 6-31
	Noise interference occurred because an I/O signal cable is too long.	Turn OFF the power supply to the servo system. Check the lengths of the I/O signal cables.	The I/O signal cables must be no longer than 3 m.	–
	An encoder fault occurred. (The pulse count does not change.)	–	Turn OFF the power supply to the servo system. Replace the Servomotor or linear encoder.	–
	A failure occurred in the SERVOPACK.	–	Turn OFF the power supply to the servo system. Replace the SERVOPACK.	–
Servomotor Overheated	The surrounding air temperature is too high.	Measure the surrounding air temperature around the Servomotor.	Reduce the surrounding air temperature to 40°C or less.	–
	The surface of the Servomotor is dirty.	Turn OFF the power supply to the servo system. Visually check the surface for dirt.	Clean dirt, dust, and oil from the surface.	–
	There is an overload on the Servomotor.	Check the load status with a monitor.	If the Servomotor is overloaded, reduce the load or replace the Servo Drive with a SERVOPACK and Servomotor with larger capacities.	–
	Polarity detection was not performed correctly.	Check to see if electrical angle 2 (electrical angle from polarity origin) at any position is between ±10°.	Correct the settings for the polarity detection-related parameters.	–

Panel Displays and Panel Operator Procedures

13

This chapter describes how to interpret panel displays and the operation of the Panel Operator.

13.1 Panel Operator 13-3

13.1.1 Panel Operator Key Names and Functions 13-3
13.1.2 Changing Modes 13-3
13.1.3 Status Displays 13-4

13.2 Parameter (Pn□□□) Operations on the Panel Operator . . 13-6

13.2.1 Setting Parameters That Require Numeric Settings 13-6
13.2.2 Setting Parameters That Require Selection of Functions 13-7

13.3 Monitor Display (Un□□□) Operations on the Panel Operator . . 13-8

13.3.1 Basic Monitor Display Operations 13-8
13.3.2 Input Signal Monitor (Un005) 13-8
13.3.3 Output Signal Monitor (Un006) 13-9
13.3.4 Safety Input Signal Monitor (Un015) 13-10
13.3.5 Upper Limit Setting Monitor for Maximum Motor Speed/Upper Limit Setting for Encoder Output Resolution (Un010) 13-11
13.3.6 Polarity Sensor Signal Monitor (Un011) 13-11

13.4 Utility Function (Fn□□□) Operations on the Panel Operator . . 13-12
13.4.1 Display Alarm History (Fn000) 13-12
13.4.2 Jog (Fn002) 13-13
13.4.3 Origin Search (Fn003) 13-14
13.4.4 Jog Program (Fn004) 13-15
13.4.5 Initialize Parameters (Fn005) 13-16
13.4.6 Clear Alarm History (Fn006) 13-16
13.4.7 Reset Absolute Encoder (Fn008) 13-17
13.4.8 Autotune Analog (Speed/Torque) Reference Offset (Fn009) 13-18
13.4.9 Manually Adjust Speed Reference Offset (Fn00A) 13-18
13.4.10 Manually Adjust Torque Reference Offset (Fn00B) 13-19
13.4.11 Adjust Analog Monitor Output Offset (Fn00C) 13-20
13.4.12 Adjust Analog Monitor Output Gain (Fn00D) . . 13-20
13.4.13 Autotune Motor Current Detection Signal Offset (Fn00E) 13-21
13.4.14 Manually Adjust Motor Current Detection Signal Offset (Fn00F) 13-22
13.4.15 Write Prohibition Setting (Fn010) 13-23
13.4.16 Display Servomotor Model (Fn011) 13-24
13.4.17 Display Software Version (Fn012) 13-26
13.4.18 Multiturn Limit Setting after Multiturn Limit Disagreement Alarm (Fn013) 13-26
13.4.19 Reset Option Module Configuration Error (Fn014) 13-27
13.4.20 Initialize Vibration Detection Level (Fn01B) . . . 13-27
13.4.21 Display SERVOPACK and Servomotor IDs (Fn01E) 13-28
13.4.22 Display Servomotor ID from Feedback Option Module (Fn01F) 13-28
13.4.23 Set Absolute Linear Encoder Origin (Fn020) . . . 13-28
13.4.24 Resetting Motor Type Alarms (Fn021) 13-29
13.4.25 Software Reset (Fn030) 13-29
13.4.26 Polarity Detection (Fn080) 13-29
13.4.27 Tuning-less Level Setting (Fn200) 13-30
13.4.28 Advanced Autotuning without Reference (Fn201) 13-31
13.4.29 Advanced Autotuning with Reference (Fn202) 13-31
13.4.30 One-Parameter Tuning (Fn203) 13-31
13.4.31 Adjust Anti-resonance Control (Fn204) 13-32
13.4.32 Vibration Suppression (Fn205) 13-32
13.4.33 Easy FFT (Fn206) 13-32

13.1 Panel Operator

13.1.1 Panel Operator Key Names and Functions

The Panel Operator consists of a panel display and Panel Operator keys.
You can use the Panel Operator to set parameters, display status, execute utility functions, and monitor SERVOPACK operation.

The Panel Operator key names and functions are given below.

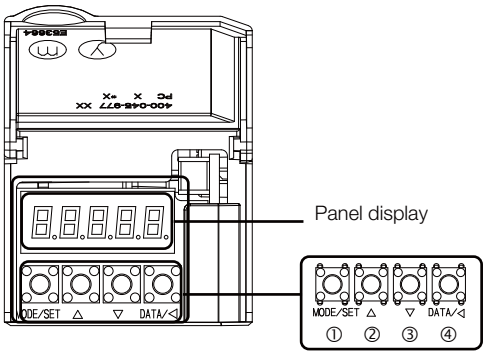

Panel Operator

Key No.	Key Name	Function
①	MODE/SET Key	• Changes the display. • Confirms settings.
②	UP Key	Increases the setting.
③	DOWN Key	Decreases the setting.
④	DATA/SHIFT Key	• Displays the setting. To display the setting, press the **DATA/SHIFT** Key for approximately one second. • Moves to the next digit on the left when a digit is flashing.

13.1.2 Changing Modes

Press the **MODE/SET** Key to change between the modes as shown below.

Refer to the reference pages for the operating procedures in each function mode.

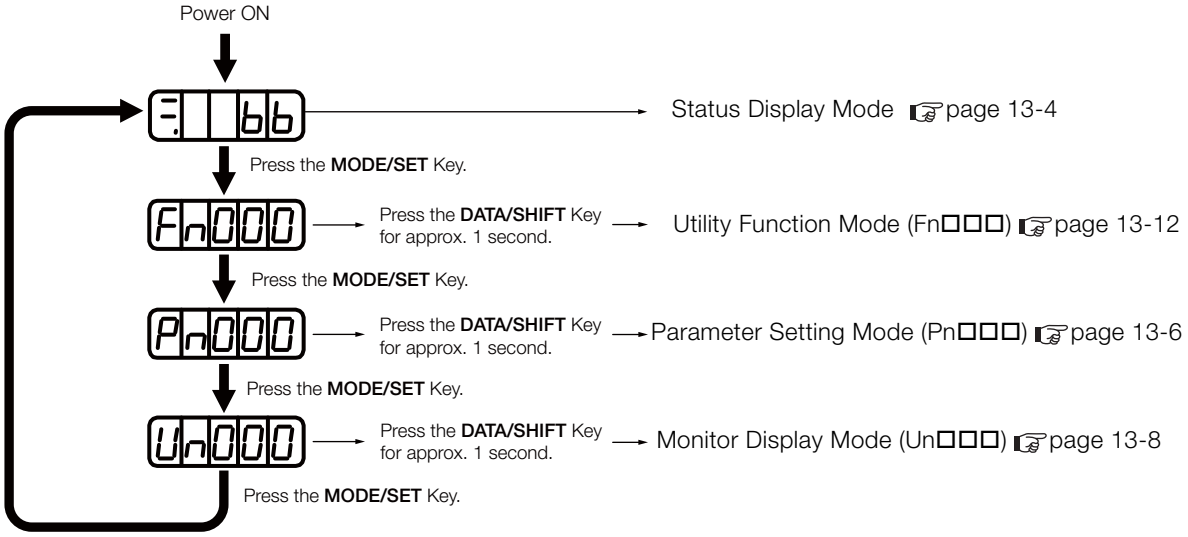

Information

You can change the setting of Pn52F (Monitor Display at Startup) to display the Monitor Display Mode instead of the Status Display Mode after the power supply is turned ON.
Set Pn52F to the Un number of the monitor display to display after the power supply is turned ON.

Pn52F	Monitor Display at Startup				Speed Position Torque
	Setting Range	Setting Unit	Default Setting	When Enabled	Classification
	0000 to 0FFF	–	0FFF	Immediately	Setup

If 0FFF is set (default setting), the SERVOPACK will enter the Status Display Mode after the power supply is turned ON.

13.1.3 Status Displays

The status is displayed as described below.

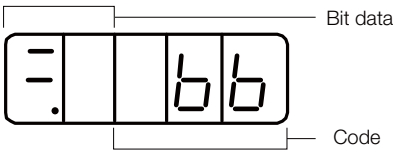

- Interpreting Bit Data

Display	Meaning
	Control Power ON Display Lit while the SERVOPACK control power is ON. Not lit if the SERVOPACK control power is OFF.
	Base Block Display Lit if the servo is OFF. Not lit while the servo is ON.
	During Speed Control: /V-CMP (Speed Coincidence Detection) Signal Display Lit if the difference between the Servomotor speed and the reference speed is the same as or less than the setting of Pn503 or Pn582. (The default setting is 10 min^{-1} or 10 mm/s.) Always lit during torque control. Additional Information If there is noise in the reference voltage during speed control, the horizontal segment (-) on the top of the leftmost digit on the Panel Operator display may flash. Refer to the following section and implement countermeasures against noise. ☞ *4.1.2 Countermeasures against Noise* on page 4-5 During Position Control: /COIN (Positioning Completion) Signal Display Lit if the deviation between the position reference and actual motor position is equal to or less than the setting of Pn522. (The default setting is 7 reference units.) Not lit it the deviation exceeds the setting.
	/TGON (Rotation Detection) Signal Display Lit if the Servomotor speed is higher than the setting of Pn502 or Pn581 and not lit if the speed is lower than the setting. (The default setting is 20 min^{-1} or 20 mm/s.)
	During Speed Control: Speed Reference Input Display Lit if the current input reference is larger than the setting of Pn502 or Pn581 and not lit if the reference is smaller than the setting. (The default setting is 20 min^{-1} or 20 mm/s.) During Position Control: Reference Pulse Input Display Lit while reference pulses are being input. Not lit if reference pulses are not being input.
	During Torque Control: Torque Reference Input Display Lit if the current input torque reference is larger than the specified value (10% of the rated torque) and not lit if the reference is smaller than the specified value. During Position Control: Clear Signal Input Display Lit while the clear signal is being input. Not lit if the clear signal is not being input.
	Power Ready Display Lit while the main circuit power supply is ON. Not lit if the main circuit power supply is OFF.

- Interpreting Codes

Display	Meaning
bb	**Base Block Active** Indicates that the servo is OFF.
run	**Operation in Progress** Indicates that the servo is ON.
Pot	**Forward Drive Prohibited** Indicates that the P-OT (Forward Drive Prohibit) signal is open.
not	**Reverse Drive Prohibited** Indicates that the N-OT (Reverse Drive Prohibit) signal is open.
FSt	**Forced Stop Status** Indicates that the FSTP (Force Stop Input) signal forced the Servomotor to stop.

Display	Meaning
Hbb	**Safety Function** Indicates that the SERVOPACK is in the hard wire base block state due to a safety function.
(Example: Operation in Progress Status) run (Displayed alternately.) tSt	**Test without Motor in Progress** Indicates that the test without a motor is in progress. The status display changes according to the status of Servomotor and SERVOPACK. However, **tSt** will not be displayed during a test without a motor even if an alarm occurs.
020	**Alarm Status** Flashes the alarm number.

13.2 Parameter (Pn□□□) Operations on the Panel Operator

This section describes the procedures for setting the parameters that are used in this manual.

Refer to the following sections for details on parameter classifications and notation.

☞ *5.1.1 Parameter Classification* on page 5-4
☞ *5.1.2 Notation for Parameters* on page 5-5

13.2.1 Setting Parameters That Require Numeric Settings

The following procedure shows how to change the setting of Pn100 (Speed Loop Gain) from 40.0 to 100.0 as an example of a parameter that requires a numeric setting.

Step	Panel Display after Operation	Keys	Operation
1	Pn100	MODE/SET ▲ ▼ DATA/◀	Press the **MODE/SET** Key to enter Parameter Setting Mode. If **Pn100** is not displayed, press the **UP** Key or DOWN Key to display **Pn100**.
2	00040.0	MODE/SET ▲ ▼ DATA/◀	Press the **DATA/SHIFT** Key for approximately one second. The current setting of Pn100 will be displayed.
3	00040.0	MODE/SET ▲ ▼ DATA/◀	Press the **DATA/SHIFT** Key to move the digit that is flashing to “4”. (You can change the value of the digit that is flashing.)
4	00100.0	MODE/SET ▲ ▼ DATA/◀	Press the **UP** Key six times to change the setting to 100.0. Refer to the following section for the operating procedure for settings with more than five digits. ☞ ◆ *Parameters with Settings of More Than Five Digits* on page 13-7
5	00100.0 (Flashing)	MODE/SET ▲ ▼ DATA/◀	Press the **MODE/SET** Key. The display will flash. The setting has now been changed from 40.0 to 100.0.
6	Pn100	MODE/SET ▲ ▼ DATA/◀	Press the **DATA/SHIFT** Key for approximately one second to return the display to **Pn100**.

Information

Setting Negative Numbers

- For parameters that accept a negative setting, display **00000** and then press the **DOWN** Key to set a negative number.
- For a negative number, the value increases when the **DOWN** Key is pressed and decreases when the **UP** Key is pressed.

◆ Parameters with Settings of More Than Five Digits

The Panel Operator displays five digits. Settings of more than five digits are displayed as shown in the following figure.

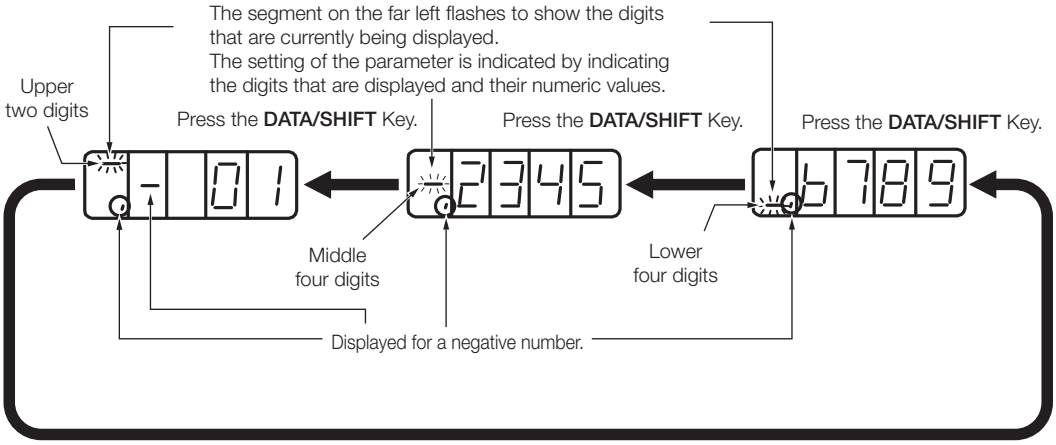

13.2.2 Setting Parameters That Require Selection of Functions

For parameters that require selection of functions, you can select the individual digits of the numbers displayed on the Panel Operator to set the functions assigned to them.

The following example shows how to change the setting of Pn000 = n.□□X□ (Control Method Selection) in Pn000 (Basic Function Selections 0) from speed control to position control.

Step	Panel Display after Operation	Keys	Operation
1	Pn000	MODE/SET ▲ ▼ DATA/◀	Press the **MODE/SET** Key to enter Parameter Setting Mode. If **Pn000** is not displayed, press the **UP** Key or **DOWN** Key to display **Pn000**.
2	n.0000	MODE/SET ▲ ▼ DATA/◀	Press the **DATA/SHIFT** Key for approximately one second. The current setting of Pn000 will be displayed.
3	n.0000	MODE/SET ▲ ▼ DATA/◀	Press the **DATA/SHIFT** Key to move the digit that is flashing. (You can change the value of the digit that is flashing.)
4	n.0010	MODE/SET ▲ ▼ DATA/◀	Press the **UP** Key once to change the display to **n.0010**. (This changes the control method from speed control to position control.)
5	n.0010 (Flashing)	MODE/SET ▲ ▼ DATA/◀	Press the **MODE/SET** Key. The display will flash. The control method has now been changed from speed control to position control.
6	Pn000	MODE/SET ▲ ▼ DATA/◀	Press the **DATA/SHIFT** Key for approximately one second. **Pn000** is displayed again.
7	To enable the change to the setting, turn the power supply to the SERVOPACK OFF and ON again.		

13.3 Monitor Display (Un□□□) Operations on the Panel Operator

You can monitor the status of the reference values and I/O signals that are set in the SERVOPACK and the internal status of the SERVOPACK with monitor displays.

The Panel Operator displays numbers beginning with “Un.”

Display Example for Motor Speed

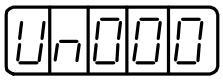

This section describes the basic operations for monitor displays and how to interpret some special monitor displays.

Refer to the following section for details on the contents of the monitor display.

☞ *15.2.2 Corresponding SERVOPACK Monitor Display Function Names* on page 15-9

13.3.1 Basic Monitor Display Operations

The procedure for Un000 (Motor Speed) is described here as an example.

Step	Panel Display after Operation	Keys	Operation
1	Un000	MODE/SET ▲ ▼ DATA/◀	Press the **MODE/SET** Key to enter Monitor Display Mode.
2	Un000	MODE/SET ▲ ▼ DATA/◀	Press the **UP** Key or **DOWN** Key to select the Un number of the item that you want to monitor.
3	1500	MODE/SET ▲ ▼ DATA/◀	Press the **DATA/SHIFT** Key for approximately one second. The contents of the monitor display for the specified Un number will appear. Refer to the following section for the operating procedure for displays with more than five digits. ☞ ◆ *Parameters with Settings of More Than Five Digits* on page 13-7
4	Un000	MODE/SET ▲ ▼ DATA/◀	Press the **DATA/SHIFT** Key for approximately one second. The display shown for step 1 will appear again.

13.3.2 Input Signal Monitor (Un005)

You can use Un005 to display the status of allocated signals on the LED segments of the Panel Operator.

◆ Interpreting the Display

LED Segments

- If the input signal that corresponds to the LED number is OFF, the top LED segment will be lit.
- If the input signal that corresponds to the LED number is ON, the bottom LED segment will be lit.

The allocations are given in the following table.

LED number	Input Pin Number	Signal Name (Default Setting)
1	CN1-40	/SI0 (/S-ON)
2	CN1-41	/SI3 (/P-CON)
3	CN1-42	/SI1 (P-OT)
4	CN1-43	/SI2 (N-OT)
5	CN1-44	/SI4 (/ALM-RST)
6	CN1-45	/SI5 (/P-CL)
7	CN1-46	/SI6 (/N-CL)
8	CN1-4	SEN

Information The configuration of the input circuits is shown below.
OFF: Open
ON: Closed
Example:

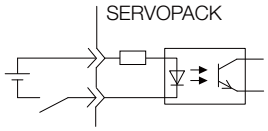

OFF (open)

◆ Display Examples

Display examples for input signals are shown below.

- When the /S-ON (Servo ON) Signal Is ON

The bottom segment of digit 1 is lit.

- When the /S-ON (Servo ON) Signal Is OFF

The top segment of digit 1 is lit.

- When the P-OT (Forward Drive Prohibit) Signal Is Active

The top segment of digit 3 is lit.

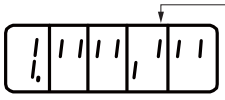

13.3.3 Output Signal Monitor (Un006)

You can use Un006 to display the status of allocated signals on the LED segments of the Panel Operator.

◆ Interpreting the Display

LED Segments

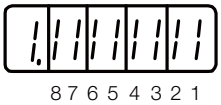

Top: OFF
Bottom: ON

LED number

- If the output signal that corresponds to the LED number is OFF, the top LED segment will be lit.

- If the output signal that corresponds to the LED number is ON, the bottom LED segment will be lit.

The allocations are given in the following table.

LED number	Output Pin Numbers	Signal Name (Default Setting)
1	CN1-31and CN1-32	ALM+, CALM-
2	CN1-25 and CN1-26	/SO1+ (/COIN+ or /V-CMP+) and /SO1- (/COIN- or /V-CMP-)
3	CN1-27 and CN1-28	/SO2+ (/TGON+) /SO2- (/TGON-)
4	CN1-29 and CN1-30	/SO3+ (/S-RDY+) /SO3- (/S-RDY-)
5	CN1-37	ALO1
6	CN1-38	ALO2
7	CN1-39	ALO3
8	–	Reserved.

Information

The configuration of the output circuits is shown below.
OFF: Transistor OFF
ON: Transistor ON
Example:

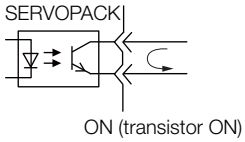

◆ Display Examples

A display example for output signals is shown below.

- When the ALM (Servo Alarm) Signal Is OFF

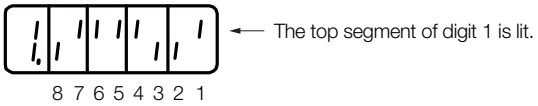

13.3.4 Safety Input Signal Monitor (Un015)

◆ Interpreting the Display

You can display the status of allocated signals on the LED segments of the Panel Operator.

LED Segments

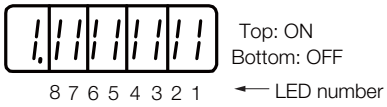

- If the signal that corresponds to the LED number is ON, the top LED segment will be lit.
- If the signal that corresponds to the LED number is OFF, the bottom LED segment will be lit.

The allocations are given in the following table.

LED number	Input Pin Numbers	Signal
1	CN8-3 and CN8-4	/HWBB1
2	CN8-5 and CN8-6	/HWBB2
3	–	Reserved.
4	–	Reserved.
5	–	Reserved.
6	–	Reserved.
7	–	Reserved.
8	–	Reserved.

Information The configuration of the input circuits is shown below.
OFF: Open
ON: Closed
Example:

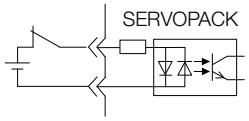

ON (closed)

◆ Display Example

A display example for safety input signals is shown below.

- When the /HWBB1 Signal Turns OFF to Activate a HWBB

← The bottom segment of digit 1 is lit.

8 7 6 5 4 3 2 1

13.3.5 Upper Limit Setting Monitor for Maximum Motor Speed/ Upper Limit Setting for Encoder Output Resolution (Un010)

You can use Un010 to monitor the upper limit setting for the maximum motor speed or the upper limit setting for the encoder output resolution.
You can monitor the upper limit of the encoder output resolution setting (Pn281) for the current maximum motor speed setting (Pn385), or you can monitor the upper limit of the maximum motor speed setting for the current encoder output resolution setting.
Select which signal to monitor with Pn080 = n.X□□□ (Calculation Method for Maximum Speed or Encoder Output Pulses).

- If Pn080 = n.0□□□, the encoder output resolution (Pn281) that can be set is displayed.
- If Pn080 = n.1□□□, the maximum motor speed (Pn385) that can be set is displayed in mm/s.

13.3.6 Polarity Sensor Signal Monitor (Un011)

You can use Un011 to monitor the signal pattern of the polarity sensor.

Press the **DATA/SHIFT** Key for approximately one second to display the polarity sensor signal pattern.

Top segment: ON (high level)
Bottom segment: OFF (low level)
Phase-W signal monitor
Phase-V signal monitor
Phase-U signal monitor

Polarity Sensor Signal Pattern	Signal Monitor		
	Phase U	Phase V	Phase W
0	L	L	L
1	L	L	H
2	L	H	L
3	L	H	H
4	H	L	L
5	H	L	H
6	H	H	L
7	H	H	H

13.4 Utility Function (Fn□□□) Operations on the Panel Operator

Utility functions are used to set up and tune the SERVOPACK.

The Panel Operator displays numbers beginning with “Fn.”

Display Example: Origin Search

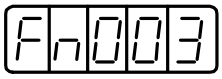

The operating procedures from the Panel Operator are described here. Refer to the descriptions of individual utility functions for preparations and related parameters.

Refer to the following section for details on utility functions.

☞ *15.2.1 Corresponding SERVOPACK Utility Function Names* on page 15-7

13.4.1 Display Alarm History (Fn000)

Refer to the following section for information on this utility function other than the procedure.

☞ *12.2.4 Displaying the Alarm History* on page 12-42

Step	Panel Display after Operation	Keys	Operation
1	Fn000	MODE/SET ▲ ▼ DATA/◀	Press the **MODE/SET** Key to enter Utility Function Mode. If **Fn000** is not displayed, press the **UP** Key or **DOWN** Key to display **Fn000**.
2	0. 810	MODE/SET ▲ ▼ DATA/◀	Press the **DATA/SHIFT** Key for approximately one second. The most recent alarm will be displayed.
3	1. C90 Alarm number	MODE/SET ▲ ▼ DATA/◀	Press the **DOWN** Key to display the next older alarm. Press the **UP** Key to display the next newer alarm. The higher the far-left segment is, the older the alarm is. Refer to the following section for information on alarms. ☞ *12.2.1 List of Alarms* on page 12-5
4	_3456	MODE/SET ▲ ▼ DATA/◀	Press the **DATA/SHIFT** Key. The lower four digits of the time stamp will be displayed.
5	-7890	MODE/SET ▲ ▼ DATA/◀	Press the **DATA/SHIFT** Key. The middle four digits of the time stamp will be displayed.
6	¯ 00	MODE/SET ▲ ▼ DATA/◀	Press the **DATA/SHIFT** Key. The upper two digits of the time stamp will be displayed.
7	1. C90	MODE/SET ▲ ▼ DATA/◀	Press the **DATA/SHIFT** Key. The alarm number will flash on the display.
8	Fn000	MODE/SET ▲ ▼ DATA/◀	Press the **DATA/SHIFT** Key again for approximately one second to return the display to **Fn000**.

Term

Time Stamp
A time stamp gives the total operation time to the point at which the alarm occurred in increments of 100 ms from when the control power supply and main circuit power supply were turned ON. For 24-hour, 365-day operation, measurements are possible for approximately 13 years.

Example

Time Stamp Display Example
If **36000** is displayed, 3,600,000 ms = 3,600 s = 60 min = 1 h
Therefore, the total operation time in hours is 1 hour.

13.4.2 Jog (Fn002)

Refer to the following section for information on this utility function other than the procedure.

☞ *7.3 Trial Operation for the Servomotor without a Load* on page 7-7

Step	Panel Display after Operation	Keys	Operation
1	Fn000	MODE/SET ▲ ▼ DATA/◀	Press the **MODE/SET** Key to enter Utility Function Mode.
2	Fn002	MODE/SET ▲ ▼ DATA/◀	Press the **UP** Key or **DOWN** Key to display **Fn002**.
3	-. .JoG	MODE/SET ▲ ▼ DATA/◀	Press the **DATA/SHIFT** Key for approximately one second. The display shown at the left will appear.
4	-. .JoG	MODE/SET ▲ ▼ DATA/◀	Press the **MODE/SET** Key to turn ON the servo.
5	-. -.JoG	MODE/SET ▲ ▼ DATA/◀	The Servomotor will operate at the speed set in Pn304 or Pn383 while the **UP** Key (for forward operation) or **DOWN** Key (for reverse operation) is pressed.
6	-. .JoG	MODE/SET ▲ ▼ DATA/◀	Press the **MODE/SET** Key to turn OFF the servo. Additional Information You can turn OFF the servo by pressing the **DATA/SHIFT** Key for approximately one second.
7	Fn002	MODE/SET ▲ ▼ DATA/◀	Press the **DATA/SHIFT** Key for approximately one second to return the display to **Fn002**.
8	Turn the power supply to the SERVOPACK OFF and ON again after you finish jogging.		

13.4.3 Origin Search (Fn003)

Refer to the following section for information on this utility function other than the procedure.
☞ *7.6.2 Origin Search* on page 7-25

Step	Panel Display after Operation	Keys	Operation
1	Fn000	MODE/SET	Press the **MODE/SET** Key to enter Utility Function Mode.
2	Fn003	▲ ▼	Press the **UP** Key or **DOWN** Key to display **Fn003**.
3	-. .CSr	DATA/◀	Press the **DATA/SHIFT** Key for approximately one second. The display shown on the left will appear.
4	. .CSr	MODE/SET	Press the **MODE/SET** Key to turn ON the servo. The display shown on the left will appear.
5	. .CSr	▲ ▼	Press the **UP** Key to operate the Servomotor in the forward direction. Press the **DOWN** Key to operate the Servomotor in the reverse direction. The rotation direction of the Servomotor changes according to the setting of Pn000 = n.□□□X as shown in the following table. • Rotary Servomotors Parameter: Pn000 n.□□□0 — UP Key: CCW, DOWN Key: CW Pn000 n.□□□1 — UP Key: CW, DOWN Key: CCW Note: This is the direction when viewed from the load side of the Servomotor. • Linear Servomotors Parameter: Pn000 n.□□□0 — UP Key: Linear encoder counts up., DOWN Key: Linear encoder counts down. Pn000 n.□□□1 — UP Key: Linear encoder counts down., DOWN Key: Linear encoder counts up. Note: The direction in which the linear encoder counts up is the forward direction. Refer to the following section for details. ☞ *5.6 Motor Direction Setting* on page 5-18
6	. .CSr (Flashing)	–	When the Servomotor origin search has been completed, the display will flash. At this time, the Servomotor is servo-locked at the origin within one rotation of the encoder.
7	Fn003	DATA/◀	Press the **DATA/SHIFT** Key for approximately one second to return the display to **Fn003**.
8	Turn the power supply to the SERVOPACK OFF and ON again after you finish the origin search.		

13.4.4 Jog Program (Fn004)

Refer to the following section for information on this utility function other than the procedure.
☞ *7.6.1 Program Jogging* on page 7-20

Step	Panel Display after Operation	Keys	Operation
1	Fn000	MODE/SET ▲ ▼ DATA/◀	Press the **MODE/SET** Key to enter Utility Function Mode.
2	Fn004	MODE/SET ▲ ▼ DATA/◀	Press the **UP** Key or **DOWN** Key to display **Fn004**.
3	-.P.J0G	MODE/SET ▲ ▼ DATA/◀	Press the **DATA/SHIFT** Key for approximately one second. The display shown on the left will appear.
4	-.P.J0G	MODE/SET ▲ ▼ DATA/◀	Press the **MODE/SET** Key to turn ON the servo. The display shown on the left will appear.
5	.P.J0G	MODE/SET ▲ ▼ DATA/◀	Press the **UP** Key or **DOWN** Key according to the initial movement direction of the operation pattern. The operation will start after the preset waiting time. Additional Information • Press the **MODE/SET** Key during operation. The servo will turn OFF and the Servomotor will stop. • Press the **DATA/SHIFT** Key for approximately one second during operation. The display shown for step 2 will appear again.
6	-.P.J0G	–	When program jogging has been completed, **End** will flash on the display, and then the display shown on the left will appear again. Additional Information • Press the **MODE/SET** Key during operation to turn OFF the servo and return to the display shown for step 3. • Press the **DATA/SHIFT** Key for approximately one second during operation to return to the display shown for step 2.
7	Turn the power supply to the SERVOPACK OFF and ON again after you finish program jogging.		

13.4.5 Initialize Parameters (Fn005)

Refer to the following section for information on this utility function other than the procedure.
☞ *5.1.5 Initializing Parameter Settings* on page 5-11

Step	Panel Display after Operation	Keys	Operation
1	Fn000	MODE/SET	Press the **MODE/SET** Key to enter Utility Function Mode.
2	Fn005	▲ ▼	Press the **UP** Key or **DOWN** Key to display **Fn005**.
3	P.Init	DATA/◀	Press the **DATA/SHIFT** Key for approximately one second. The display shown at the left will appear.
4	P.Init	MODE/SET	Press the **MODE/SET** Key to initialize the parameters. When the initialization has been completed, **donE** will flash on the display, and then the display shown on the left will appear again.
5	To enable the change to the setting, turn the power supply to the SERVOPACK OFF and ON again after the initialization of the parameter settings has been completed.		

13.4.6 Clear Alarm History (Fn006)

Refer to the following section for information on this utility function other than the procedure.
☞ *12.2.5 Clearing the Alarm History* on page 12-43

Step	Panel Display after Operation	Keys	Operation
1	Fn000	MODE/SET	Press the **MODE/SET** Key to enter Utility Function Mode.
2	Fn006	▲ ▼	Press the **UP** Key or **DOWN** Key to display **Fn006**.
3	trCLr	DATA/◀	Press the **DATA/SHIFT** Key for approximately one second. The display shown at the left will appear.
4	trCLr	MODE/SET	Press the **MODE/SET** Key to clear the alarm history. When deleting the alarms has been completed, **donE** will flash on the display, and then the display shown on the left will appear again.
5	Fn006	DATA/◀	Press the **DATA/SHIFT** Key for approximately one second to return the display to **Fn006**.

13.4.7 Reset Absolute Encoder (Fn008)

Refer to the following section for information on this utility function other than the procedure.

☞ *5.17 Resetting the Absolute Encoder* on page 5-52

Step	Panel Display after Operation	Keys	Operation
1	Fn000	MODE/SET ▲ ▼ DATA/◀	Press the **MODE/SET** Key to enter Utility Function Mode.
2	Fn008	MODE/SET ▲ ▼ DATA/◀	Press the **UP** Key or **DOWN** Key to display **Fn008**.
3	PGCL1	MODE/SET ▲ ▼ DATA/◀	Press the **DATA/SHIFT** Key for approximately one second. **PGCL1** will be displayed.
4	PGCL5	MODE/SET ▲ ▼ DATA/◀	Continue pressing the **UP** Key until **PGCL5** is displayed. Note: If you press the wrong key, **no-oP** will flash on the display for approximately one second and the display will return to the original Utility Function Mode display. Repeat the operation from the beginning.
5	donE	MODE/SET ▲ ▼ DATA/◀	Press the **MODE/SET** Key. The absolute encoder will be initialized. When initialization has been completed, **donE** will flash on the display for approximately one second.
6	PGCL5	–	After displaying **donE**, the display will return to the **PGCL5** display.
7	Fn008	MODE/SET ▲ ▼ DATA/◀	Press the **DATA/SHIFT** Key for approximately one second to return the display to **Fn008**.
8	To enable the change to the settings, turn the power supply to the SERVOPACK OFF and ON again.		

13.4.8 Autotune Analog (Speed/Torque) Reference Offset (Fn009)

Refer to the following section for information on this utility function other than the procedure.

☞ ◆ *Automatically Adjusting the Speed Reference Offset* on page 6-20
☞ *Automatically Adjusting the Torque Reference Offset* on page 6-41

Step	Panel Display after Operation	Keys	Operation
1	–	–	Turn OFF the servo, and input a 0-V reference voltage from the host controller or an external circuit.
2	Fn000	MODE/SET	Press the **MODE/SET** Key to enter Utility Function Mode.
3	Fn009	▲ ▼	Press the **UP** Key or **DOWN** Key to display **Fn009**.
4	rEF_o	DATA/◀	Press the **DATA/SHIFT** Key for approximately one second. **rEF_o** will be displayed.
5	rEF_o	MODE/SET	Press the MODE/SET Key. **donE** will flash on the display for approximately one second, and then the display shown on the left will appear.
6	Fn009	DATA/◀	Press the **DATA/SHIFT** Key for approximately one second to return the display to **Fn009**.

13.4.9 Manually Adjust Speed Reference Offset (Fn00A)

Refer to the following section for information on this utility function other than the procedure.

☞ ◆ *Manually Adjusting the Speed Reference Offset* on page 6-22

Step	Panel Display after Operation	Keys	Operation
1	Fn000	MODE/SET	Press the **MODE/SET** Key to enter Utility Function Mode.
2	Fn00A	▲ ▼	Press the **UP** Key or **DOWN** Key to display **Fn00A**.
3	E.SPd	DATA/◀	Press the **DATA/SHIFT** Key for approximately one second. The display shown on the left will appear. Note: If write protection is set, **no_oP** will flash on the display for approximately one second. Change the setting of Fn010 to enable writing.
4	E.SPd	–	Turn ON the servo from an external device. The display shown on the left will appear.
5	00000	DATA/◀	Press the **DATA/SHIFT** Key for approximately one second. The current amount of offset will be displayed.
6	00002 Example:	▲ ▼	Press the **UP** Key or **DOWN** Key to adjust the offset until the Servomotor stops. The displayed value is the amount of the offset.
7	E.SPd	MODE/SET	Press the **MODE/SET** Key. **donE** will flash on the display, and then the display shown on the left will appear.

Continued on next page.

Continued from previous page.

Step	Panel Display after Operation	Keys	Operation
8	Fn00A	MODE/SET ▲ ▼ DATA/◀	Press the **DATA/SHIFT** Key for approximately one second to return the display to **Fn00A**.

13.4.10 Manually Adjust Torque Reference Offset (Fn00B)

Refer to the following section for information on this utility function other than the procedure.

☞ *Manually Adjusting the Torque Reference Offset* on page 6-43

Step	Panel Display after Operation	Keys	Operation
1	Fn000	MODE/SET ▲ ▼ DATA/◀	Press the **MODE/SET** Key to enter Utility Function Mode.
2	Fn00b	MODE/SET ▲ ▼ DATA/◀	Press the **UP** Key or **DOWN** Key to display **Fn00b**.
3	-.tr9	MODE/SET ▲ ▼ DATA/◀	Press the **DATA/SHIFT** Key for approximately one second. The display shown on the left will appear. Note: If write protection is set, **no_oP** will flash on the display for approximately one second. Change the setting of Fn010 to enable writing.
4	-.tr9	–	Turn ON the servo. The display shown on the left will appear.
5	00000	MODE/SET ▲ ▼ DATA/◀	Press the **DATA/SHIFT** Key for approximately one second. The current amount of offset will be displayed.
6	00002 Example:	MODE/SET ▲ ▼ DATA/◀	Press the **UP** Key or **DOWN** Key to adjust the amount of offset.
7	-.tr9	MODE/SET ▲ ▼ DATA/◀	Press the **MODE/SET** Key. **donE** will flash on the display, and then the display shown on the left will appear.
8	Fn00b	MODE/SET ▲ ▼ DATA/◀	Press the **DATA/SHIFT** Key for approximately one second to return the display to **Fn00b**.

13.4.11 Adjust Analog Monitor Output Offset (Fn00C)

Refer to the following section for information on this utility function other than the procedure.
☞ *Adjusting the Analog Monitor Output* on page 9-12

Step	Panel Display after Operation	Keys	Operation
1	Fn000	MODE/SET	Press the **MODE/SET** Key to enter Utility Function Mode.
2	Fn00C	▲ ▼	Press the **UP** Key or **DOWN** Key to display **Fn00C**.
3	Ch1_o	DATA/◀	Press the **DATA/SHIFT** Key for approximately one second. The display shown at the left will appear.
4	0000	DATA/◀	Press the **DATA/SHIFT** Key. The offset will be displayed as shown on the left.
5	-0001	▲ ▼	Press the **UP** Key or **DOWN** Key to adjust the offset.
6	Ch1_o	DATA/◀	Press the **DATA/SHIFT** Key. The display shown on the left will appear again.
7	Ch2_o	MODE/SET	Press the **MODE/SET** Key. The display will change to the monitor output for channel 2 (analog monitor 2 output).
8	0000	DATA/◀	Press the **DATA/SHIFT** Key. The offset will be displayed as shown on the left.
9	-0001	▲ ▼	Press the **UP** Key or **DOWN** Key to adjust the offset.
10	Fn00C	DATA/◀	Press the **DATA/SHIFT** Key for approximately one second. **Ch2-o** will be displayed, and then **Fn00C** will be displayed again.

13.4.12 Adjust Analog Monitor Output Gain (Fn00D)

Refer to the following section for information on this utility function other than the procedure.
☞ *Adjusting the Analog Monitor Output* on page 9-12

Step	Panel Display after Operation	Keys	Operation
1	Fn000	MODE/SET	Press the **MODE/SET** Key to enter Utility Function Mode.
2	Fn00d	▲ ▼	Press the **UP** Key or **DOWN** Key to display **Fn00D**.
3	Ch1_G	DATA/◀	Press the **DATA/SHIFT** Key for approximately one second. The display shown at the left will appear.
4	0000	DATA/◀	Press the **DATA/SHIFT** Key. The gain adjustment will be displayed as shown on the left.

Continued on next page.

Continued from previous page.

Step	Panel Display after Operation	Keys	Operation
5	-0001	MODE/SET ▲ ▼ DATA/◀	Press the **UP** Key or **DOWN** Key to adjust the gain.
6	Ch1_G	MODE/SET ▲ ▼ DATA/◀	Press the **DATA/SHIFT** Key. The display shown on the left will appear again.
7	Ch2_G	MODE/SET ▲ ▼ DATA/◀	Press the **MODE/SET** Key. The display will change from the monitor output for channel 1 to the monitor output for channel 2.
8	0000	MODE/SET ▲ ▼ DATA/◀	Press the **DATA/SHIFT** Key. The gain adjustment will be displayed as shown on the left.
9	-0001	MODE/SET ▲ ▼ DATA/◀	Press the **UP** Key or **DOWN** Key to adjust the gain.
10	Fn00d	MODE/SET ▲ ▼ DATA/◀	Press the **DATA/SHIFT** Key for approximately one second. **Ch2-G** will be displayed, and then **Fn00D** will be displayed again.

13.4.13 Autotune Motor Current Detection Signal Offset (Fn00E)

Refer to the following section for information on this utility function other than the procedure.

☞ *6.16.1 Automatic Adjustment* on page 6-103

Step	Panel Display after Operation	Keys	Operation
1	Fn000	MODE/SET ▲ ▼ DATA/◀	Press the **MODE/SET** Key to enter Utility Function Mode.
2	Fn00E	MODE/SET ▲ ▼ DATA/◀	Press the **UP** Key or **DOWN** Key to display **Fn00E**.
3	Cur_o	MODE/SET ▲ ▼ DATA/◀	Press the **DATA/SHIFT** Key for approximately one second. The display shown at the left will appear.
4	Cur_o	MODE/SET ▲ ▼ DATA/◀	Press the **MODE/SET** Key to perform automatic offset-signal adjustment. When the adjustment has been completed, **donE** will flash on the display, and then the display shown on the left will appear again.
5	Fn00E	MODE/SET ▲ ▼ DATA/◀	Press the **DATA/SHIFT** Key for approximately one second to return the display to **Fn00E**.

13.4.14 Manually Adjust Motor Current Detection Signal Offset (Fn00F)

Refer to the following section for information on this utility function other than the procedure.
☞ *6.16.2 Manual Adjustment* on page 6-105

Step	Panel Display after Operation	Keys	Operation
1	Fn000	MODE/SET	Press the **MODE/SET** Key to enter Utility Function Mode.
2	Fn00F	▲ ▼	Press the **UP** Key or **DOWN** Key to display **Fn00F**.
3	Cu1_o	DATA/◀	First you adjust the offset for phase U (**Cu1-o**). Press the **DATA/SHIFT** Key for approximately one second. The display shown at the left will appear.
4	0000	DATA/◀	Press the **DATA/SHIFT** Key. The amount of offset for phase U will be displayed.
5	-0010	▲ ▼	Press the **UP** Key or **DOWN** Key to change the amount of offset. Change the setting by approximately 10 units at a time in the direction that reduces the torque ripple to find the value that minimizes the torque ripple, and set that value. Adjustment range: -512 to +511
6	Cu1_o	DATA/◀	Press the **DATA/SHIFT** Key. The display shown on the left will appear again.
7	Cu2_o	MODE/SET	Next you adjust the offset for phase V (**Cu2-o**). Press the **MODE/SET** Key for approximately one second. The display shown at the left will appear.
8	0000	DATA/◀	Press the **DATA/SHIFT** Key. The amount of offset for phase V will be displayed.
9	-0010	▲ ▼	Press the **UP** Key or **DOWN** Key to change the amount of offset. In the same way as for the phase-U adjustment, change the setting by approximately 10 units at a time in the direction that reduces the torque ripple to find the value that minimizes the torque ripple, and set that value. Adjustment range: -512 to +511
10	Fn00F	DATA/◀	Press the **DATA/SHIFT** Key for approximately one second. **Cu2-o** will be displayed, and then **Fn00F** will be displayed again.
11	Reduce the amount by which you change the offsets each time and repeat steps 3 to 10* to fine-tune the amounts of offset.		

* Examples of the Amount of Change to Adjust Offsets
- First time: 10 units at a time
- Second time: 5 units at a time
- Third time: 1 unit at a time

The above values are guidelines. Vary the amount of change and the number of repetitions according to your system.

13.4.15 Write Prohibition Setting (Fn010)

Refer to the following section for information on this utility function other than the procedure.

☞ *5.1.4 Write Prohibition Setting for Parameters* on page 5-8

Step	Panel Display after Operation	Keys	Operation
1	Fn000	MODE/SET ▲ ▼ DATA/◀	Press the **MODE/SET** Key to enter Utility Function Mode.
2	Fn010	MODE/SET ▲ ▼ DATA/◀	Press the **UP** Key or **DOWN** Key to display **Fn010**.
3	P.0000	MODE/SET ▲ ▼ DATA/◀	Press the **DATA/SHIFT** Key for approximately one second. The display shown at the left will appear.
4	P.0001	MODE/SET ▲ ▼ DATA/◀	Press the **UP** Key or **DOWN** Key and set one of the following. P.0000: Write permitted (default setting) P.0001: Write prohibited
5	P.0001	MODE/SET ▲ ▼ DATA/◀	Press the **MODE/SET** Key to enter the value. When the setting has been completed, **donE** will flash on the display, and then the display shown on the left will appear again. Note: If you set any value other than **P.0000** or **P.0001**, **Error** will be displayed.
6	To enable the change to the setting, turn the power supply to the SERVOPACK OFF and ON again after write protection has been set or cleared.		

13.4.16 Display Servomotor Model (Fn011)

Refer to the following section for information on this utility function other than the procedure.

☞ *9.1 Monitoring Product Information* on page 9-2

Step	Panel Display after Operation	Keys	Operation
1	Fn000	MODE/SET ▲ ▼ DATA/◀	Press the **MODE/SET** Key to enter Utility Function Mode.
2	Fn011	MODE/SET ▲ ▼ DATA/◀	Press the **UP** Key or **DOWN** Key to display **Fn011**.
3	Example F.01b0	MODE/SET ▲ ▼ DATA/◀	Press the **DATA/SHIFT** Key for approximately one second to display the Servomotor voltage and model codes. F.01A0 Servomotor Voltage: 01 = 200 VAC Servomotor Model: A0 = SGM7A, A1 = SGM7P, A3 = SGM7G, A7 = SGM7M, AD = SGM7J, AE = SGM7E, AF = SGM7F, 32 = SGMCS-□□C, 33 = SGMCS-□□D, 34 = SGMCS-□□B, 35 = SGMCS-□□E, 36 = SGMCS-□□L, 37 = SGMCS-□□M, 38 = SGMCS-□□N, 39 = SGMCS-□□R, 40 = Linear Servomotor, 72 = SGMCV-□□C, 73 = SGMCV-□□D, 74 = SGMCV-□□B, 75 = SGMCV-□□E, 76 = SGMCV-□□L, 77 = SGMCV-□□M, 78 = SGMCV-□□N, 79 = SGMCV-□□R
4	Example P.0010	MODE/SET ▲ ▼ DATA/◀	Press the **MODE/SET** Key. The Servomotor capacity will be displayed. P.0010 Servomotor capacity (× 10 W) The above example indicates 100 W.

Continued on next page.

Continued from previous page.

Step	Panel Display after Operation	Keys	Operation
5	Example E.0020	MODE/SET ▲ ▼ DATA/◀	• Rotary Servomotors Press the **MODE/SET** Key. The encoder type and resolution codes will be displayed. E.0020 Encoder Type: No. 00 Incremental; 01 Multiturn absolute; 02 Single-turn absolute* Encoder Resolution: No. 20 20 bits; 22 22 bits; 24 24 bits *A single-turn absolute encoder is used only for a Direct Drive Servomotor. • Linear Servomotors Press the **MODE/SET** Key. The encoder type and linear encoder scale pitch resolution codes will be displayed. E.0008 Encoder Type: No. 00 Incremental; 01 Absolute Linear Encoder Scale Pitch Resolution: No. 8 256; 12 4096
6	S.0000	MODE/SET ▲ ▼ DATA/◀	Press the **MODE/SET** Key. The FT specifications code for the SERVOPACK will be displayed. **s.0000** indicates a standard model. If a specification code other than **s.0000** is displayed, a SERVOPACK with FT specifications is being used. S.0000 FT specifications code
7	y.0000	MODE/SET ▲ ▼ DATA/◀	Press the **MODE/SET** Key. The code for custom SERVOPACK specifications will be displayed. **y.0000** indicates a standard model. If anything other than **y.0000** is displayed, a customized SERVOPACK is being used. y.0000 Specifications code
8	Fn011	MODE/SET ▲ ▼ DATA/◀	Press the **DATA/SHIFT** Key for approximately one second to return the display to **Fn011**.

13.4.17 Display Software Version (Fn012)

Refer to the following section for information on this utility function other than the procedure.
☞ *9.1 Monitoring Product Information* on page 9-2

Step	Panel Display after Operation	Keys	Operation
1	Fn000	MODE/SET ▲ ▼ DATA/◀	Press the **MODE/SET** Key to enter Utility Function Mode.
2	Fn012	MODE/SET ▲ ▼ DATA/◀	Press the **UP** Key or **DOWN** Key to display **Fn012**.
3	r.0001	MODE/SET ▲ ▼ DATA/◀	Press the **DATA/SHIFT** Key for approximately one second. The software version of the SERVOPACK will be displayed.
4	E.0001	MODE/SET ▲ ▼ DATA/◀	Press the **MODE/SET** Key. The software version of the encoder will be displayed. Additional Information If you press the **MODE/SET** Key again, a pre-programmed display will appear. The display will change as follows: **0.0000** → **S.FFFF** → **F.FFFF.**
5	Fn012	MODE/SET ▲ ▼ DATA/◀	Press the **DATA/SHIFT** Key for approximately one second to return the display to **Fn012**.

13.4.18 Multiturn Limit Setting after Multiturn Limit Disagreement Alarm (Fn013)

Refer to the following section for information on this utility function other than the procedure.
☞ *6.12.9 Multiturn Limit Disagreement Alarm (A.CC0)* on page 6-85

Step	Panel Display after Operation	Keys	Operation
1	Fn000	MODE/SET ▲ ▼ DATA/◀	Press the **MODE/SET** Key to enter Utility Function Mode.
2	Fn013	MODE/SET ▲ ▼ DATA/◀	Press the **UP** Key or **DOWN** Key to display **Fn013**.
3	PGSEt	MODE/SET ▲ ▼ DATA/◀	Press the **DATA/SHIFT** Key for approximately one second. **PGSEt** will be displayed.
4	donE	MODE/SET ▲ ▼ DATA/◀	Press the **MODE/SET** Key. The value of the multiturn limit setting in the absolute encoder will be made the same as the setting of Pn205. When unifying the values has been completed, **donE** will flash on the display for approximately one second.
5	PGSEt	–	After displaying **donE**, the display will return to the **PGSEt** display.
6	Fn013	MODE/SET ▲ ▼ DATA/◀	Press the **DATA/SHIFT** Key for approximately one second to return the display to **Fn013**.
7	To enable the change to the settings, turn the power supply to the SERVOPACK OFF and ON again.		

13.4.19 Reset Option Module Configuration Error (Fn014)

Refer to the following section for information on this utility function other than the procedure.
☞ *12.2.6 Resetting Alarms Detected in Option Modules* on page 12-44

Step	Panel Display after Operation	Keys	Operation
1	Fn000	MODE/SET	Press the **MODE/SET** Key to enter Utility Function Mode.
2	Fn014	▲ ▼	Press the **UP** Key or **DOWN** Key to display **Fn014**.
3	o.SAFE	DATA/◀	Press the **DATA/SHIFT** Key for approximately one second. The display shown at the left will appear.
4	o.FEEd	▲ ▼	Press the **UP** Key or **DOWN** Key to select the Option Module to be cleared.
5	o.Init	MODE/SET	Press the **MODE/SET** Key for approximately one second. The display shown at the left will appear.
6	o.FEEd	MODE/SET	Press the **MODE/SET** Key again. The alarms in the Option Module will be cleared. **donE** will flash on the display and the display shown on the left will appear again.
7	Fn014	DATA/◀	Press the **DATA/SHIFT** Key for approximately one second to return the display to **Fn014**.
8	To enable the change to the setting, turn the power supply to the SERVOPACK OFF and ON again after clearing detected Option Module alarms has been completed.		

13.4.20 Initialize Vibration Detection Level (Fn01B)

Refer to the following section for information on this utility function other than the procedure.
☞ *6.15 Initializing the Vibration Detection Level* on page 6-99

Step	Panel Display after Operation	Keys	Operation
1	Fn000	MODE/SET	Press the **MODE/SET** Key to enter Utility Function Mode.
2	Fn01b	▲ ▼	Press the **UP** Key or **DOWN** Key to display **Fn01b**.
3	d.Init	DATA/◀	Press the **DATA/SHIFT** Key for approximately one second. The display shown at the left will appear.
4	d.Init (Flashing)	MODE/SET	Press the **MODE/SET** Key for approximately one second. The display shown on the left will flash and the vibration level will be detected and updated. Note: 1. Operate the SERVOPACK with the references that will be used for actual operation. 2. If the Servomotor operates at 10% or less of the maximum speed, **Error** will be displayed.

Continued on next page.

Continued from previous page.

Step	Panel Display after Operation	Keys	Operation
5	donE	MODE/SET ▲ ▼ DATA/◀	Wait for a period of time and then press the **MODE/SET** Key again to complete vibration detection and updating the setting. This will enable the setting. If the setting is completed normally, **donE** will be displayed. If there was an error in making the setting, **Error** will be displayed.
6	Fn01b	MODE/SET ▲ ▼ DATA/◀	Press the **DATA/SHIFT** Key for approximately one second to return the display to **Fn01b**.

13.4.21 Display SERVOPACK and Servomotor IDs (Fn01E)

This function cannot be executed from the Panel Operator on the SERVOPACK.

13.4.22 Display Servomotor ID from Feedback Option Module (Fn01F)

This function cannot be executed from the Panel Operator on the SERVOPACK.

13.4.23 Set Absolute Linear Encoder Origin (Fn020)

Refer to the following section for information on this utility function other than the procedure.

☞ *5.18.1 Setting the Origin of the Absolute Linear Encoder* on page 5-55

Step	Panel Display after Operation	Keys	Operation
1	Fn000	MODE/SET ▲ ▼ DATA/◀	Press the **MODE/SET** Key to enter Utility Function Mode.
2	Fn020	MODE/SET ▲ ▼ DATA/◀	Press the **UP** Key or **DOWN** Key to display **Fn020**.
3	0SEt1	MODE/SET ▲ ▼ DATA/◀	Press the **DATA/SHIFT** Key for approximately one second. The display shown at the left will appear.
4	0SEt5	MODE/SET ▲ ▼ DATA/◀	Continue pressing the **UP** Key until **0SET5** is displayed. Note: If you make a mistake during key operations, **no_oP** will flash on the display for approximately one second and then **Fn000** will be displayed again.
5	0SEt5	MODE/SET ▲ ▼ DATA/◀	Press the **MODE/SET** Key to set the origin of the absolute linear encoder. When the setting has been completed, **donE** will flash on the display, and then the display shown on the left will appear again.
6	Fn020	MODE/SET ▲ ▼ DATA/◀	Press the **DATA/SHIFT** Key for approximately one second to return the display to **Fn020**.
7	To enable the change to the settings, turn the power supply to the SERVOPACK OFF and ON again.		

13.4.24 Resetting Motor Type Alarms (Fn021)

Refer to the following section for information on this utility function other than the procedure.
☞ *12.2.7 Resetting Motor Type Alarms* on page 12-46

Step	Panel Display after Operation	Keys	Operation
1	Fn000	MODE/SET	Press the **MODE/SET** Key to enter Utility Function Mode.
2	Fn021	▲ ▼	Press the **UP** Key or **DOWN** Key to display **Fn021**.
3	C.Init	DATA/◀	Press the **DATA/SHIFT** Key for approximately one second. The display shown at the left will appear.
4	C.Init	MODE/SET	Press the **MODE/SET** Key to reset the motor type alarm. **donE** will flash on the display and the display shown on the left will appear again.
5	Fn021	DATA/◀	Press the **DATA/SHIFT** Key for approximately one second to return the display to **Fn021**.
6	To enable the change to the settings, turn the power supply to the SERVOPACK OFF and ON again.		

13.4.25 Software Reset (Fn030)

Refer to the following section for information on this utility function other than the procedure.
☞ *6.14 Software Reset* on page 6-97

Step	Panel Display after Operation	Keys	Operation
1	Fn000	MODE/SET	Press the **MODE/SET** Key to enter Utility Function Mode.
2	Fn030	▲ ▼	Press the **UP** Key or **DOWN** Key to display **Fn030**.
3	SrSt1	DATA/◀	Press the **DATA/SHIFT** Key for approximately one second. The display shown at the left will appear.
4	SrSt5	▲	Continue pressing the **UP** Key until the display shown on the left appears. Note: If you make a mistake during key operations, **no_oP** will flash on the display for approximately one second.
5	..bb	MODE/SET	Press the **MODE/SET** Key. The panel display will go blank and then will change to the same initial status display as when the power supply is turned ON.

13.4.26 Polarity Detection (Fn080)

Refer to the following section for information on this utility function other than the procedure.
☞ *5.11 Polarity Detection* on page 5-27

Step	Panel Display after Operation	Keys	Operation
1	Fn000	MODE/SET	Press the **MODE/SET** Key to enter Utility Function Mode.

Continued on next page.

Continued from previous page.

Step	Panel Display after Operation	Keys	Operation
2	Fn080	MODE/SET ▲ ▼ DATA/◀	Press the **UP** Key or **DOWN** Key to display **Fn080**.
3	-P-dt	MODE/SET ▲ ▼ DATA/◀	Press the **DATA/SHIFT** Key for approximately one second. The display shown at the left will appear.
4	.P-dt	MODE/SET ▲ ▼ DATA/◀	Press the **MODE/SET** Key to start polarity detection.
5	-P-dt	–	After polarity detection has been completed, the display shown on the left will appear. The Servomotor will enter the servo OFF state.
6	Fn080	MODE/SET ▲ ▼ DATA/◀	Press the **DATA/SHIFT** Key for approximately one second to return the display to Fn080.

13.4.27 Tuning-less Level Setting (Fn200)

Refer to the following section for information on this utility function other than the procedure.

☞ *8.4 Tuning-less Function* on page 8-12

Step	Panel Display after Operation	Keys	Operation
1	Fn000	MODE/SET ▲ ▼ DATA/◀	Press the **MODE/SET** Key to enter Utility Function Mode.
2	Fn200	MODE/SET ▲ ▼ DATA/◀	Press the **UP** Key or **DOWN** Key to display **Fn200**.
3	d00001 Load level	MODE/SET ▲ ▼ DATA/◀	Press the **DATA/SHIFT** Key for approximately one second. The load level setting display for the tuning-less levels will appear. Note: If the response waveform shows overshooting, if the load moment of inertia exceeds the allowable level (i.e., outside the scope of product warranty), or if the mass ratio is 30 or higher (i.e., outside the scope of product warranty), press the **UP** Key and change the load level to 2.
4	L0004	MODE/SET ▲ ▼ DATA/◀	Press the **MODE/SET** Key to display. The rigidity level setting display for the tuning-less levels will appear.
5	L0004 Rigidity level	MODE/SET ▲ ▼ DATA/◀	Press the **UP** Key or **DOWN** Key to set the rigidity level. Set the rigidity level to between 0 and 7. The larger the value is, the higher the gain is and the better response performance will be. (The default setting is 4.) Note: Vibration may occur if the rigidity level is too high. Lower the rigidity level if vibration occurs. If high-frequency noise is generated, press the **DATA/SHIFT** Key to automatically set a notch filter for the vibration frequency.
6	L0004	MODE/SET ▲ ▼ DATA/◀	Press the **MODE/SET** Key. “donE” will flash for approximately one second and then **L0004** will be displayed. The settings will be saved in the SERVOPACK.
7	Fn200	MODE/SET ▲ ▼ DATA/◀	Press the **DATA/SHIFT** Key for approximately one second to return the display to **Fn200**.

13.4.28 Advanced Autotuning without Reference (Fn201)

This function cannot be executed from the Panel Operator on the SERVOPACK.

13.4.29 Advanced Autotuning with Reference (Fn202)

This function cannot be executed from the Panel Operator on the SERVOPACK.

13.4.30 One-Parameter Tuning (Fn203)

Refer to the following section for information on this utility function other than the procedure.
☞ *8.8 Custom Tuning* on page 8-42

Step	Panel Display after Operation	Keys	Operation
1	Fn000	MODE/SET	Press the **MODE/SET** Key to enter Utility Function Mode.
2	Fn203	▲ ▼	Press the **UP** Key or **DOWN** Key to display **Fn203**.
3	d 0	DATA/◀	Press the **DATA/SHIFT** Key for approximately one second. The display shown at the left will appear.
4	d 0 ↓ ↑ d 1	▲ ▼	Press the **UP** Key or **DOWN** Key to enter Tuning Mode. Tuning Mode (Strength of Tuning Setting) 0: Performs tuning giving priority to stability. 1: Performs tuning giving priority to response. Note: The rigidity type is always 2.
5	d 0	–	If the servo is OFF (i.e., if power is not supplied to the Servomotor), input the /S-ON (Servo ON) from the host controller. If the servo is ON, go to step 6.
6	L0040	DATA/◀	Press the **DATA/SHIFT** Key for less than one second. The one-parameter gain will be displayed as shown on the left.
7	L0055	▲ ▼	Press the **UP** Key or **DOWN** Key to change the one-parameter gain value and change the actual servo gains (Pn100, Pn101, Pn102, and Pn401) at the same time. You end this tuning function when you decide that the response is satisfactory.
8	L0055	MODE/SET	Press the **MODE/SET** Key to save the four calculated gains to the parameters. When tuning has been completed, **donE** will flash on the display, and then the display shown on the left will appear again. Note: To end operation without saving the calculated gains, go to step 9.
9	Fn203	DATA/◀	Press the **DATA/SHIF**T Key for approximately one second to return the display to **Fn203**.

13.4.31 Adjust Anti-resonance Control (Fn204)

This function cannot be executed from the Panel Operator on the SERVOPACK.

13.4.32 Vibration Suppression (Fn205)

This function cannot be executed from the Panel Operator on the SERVOPACK.

13.4.33 Easy FFT (Fn206)

Refer to the following section for information on this utility function other than the procedure.
☞ *8.14.2 Easy FFT* on page 8-95

Step	Panel Display after Operation	Keys	Operation
1	Fn000	MODE/SET ▲ ▼ DATA/◀	Press the **MODE/SET** Key to enter Utility Function Mode.
2	Fn206	MODE/SET ▲ ▼ DATA/◀	Press the **UP** Key or **DOWN** Key to display **Fn206**.
3	In. 15 (Reference amplitude setting)	MODE/SET ▲ ▼ DATA/◀	Press the **DATA/SHIFT** Key for approximately one second. The display shown on the left will appear and the Panel Operator will enter Reference Amplitude Setting Mode.
4	In. 16	MODE/SET ▲ ▼ DATA/◀	Press the **UP** Key or **DOWN** Key to set the reference amplitude. Reference amplitude setting range: 1 to 800 Note: 1. If you are setting Easy FFT for the first time, do not change the reference amplitude setting, but rather start from the default value of 15. Although increasing the reference amplitude will increase the detection accuracy, the vibration and noise in the machine will increase momentarily. Increase the reference amplitude a little at a time and observe the results. 2. The set reference amplitude will be stored in Pn456.
5	F. (Ready to operate status)	MODE/SET ▲ ▼ DATA/◀	Press the **DATA/SHIFT** Key for approximately one second. The ready to operate status will be entered.
6	.run	MODE/SET ▲ ▼ DATA/◀	Press the **MODE/SET** Key to turn ON the servo. Additional Information Press the **MODE/SET** Key again to turn OFF the servo. Return to step 5.
7	E_FFt (Flashing) Slight movement in Servomotor	MODE/SET ▲ ▼ DATA/◀	While the servo is ON, press the **UP** Key (forward) or the **DOWN** Key (reverse). The Servomotor will automatically perform round-trip operation, moving in forward and reverse several times for 1/4th of a rotation for a Rotary Servomotor and 10 mm or less for a Linear Servomotor. The Servomotor performs this operation for approximately 2 seconds. During this operation, the display shown on the left will flash. Note: 1. Press the **MODE/SET** Key to cancel the operation. Return to step 5. 2. The Servomotor will move slightly. Also at the same time, the Servomotor will emit noise. To ensure safety, do not approach or enter the range of machine motion.

Continued on next page.

Continued from previous page.

Step	Panel Display after Operation	Keys	Operation
8	F.1250 (Detection result display example)	–	If detection is completed normally, **E_FFt** will stop flashing and the detected resonance frequency will be displayed. If detection fails, **F----** will be displayed. To check the results, go to step 9. To monitor the resonance frequency without setting the detection result, press the **DATA/SHIFT** Key for approximately one second and return to step 2. ■ IMPORTANT If the operation ended normally but it took two seconds or longer, the detection accuracy may not be sufficient. Increase the reference amplitude to a value higher than 15 to increase the detection accuracy. Although increasing the reference amplitude will increase the detection accuracy, the vibration and noise in the machine will increase momentarily. Increase the reference amplitude a little at a time and observe the results.
9	..run	MODE/SET ▲ ▼ DATA/◀	Press the **MODE/SET** Key. The optimum notch filter for the detected resonance frequency will automatically be set. If the notch filter is set correctly, **donE** will flash on the display, and then the display shown on the left will appear. If the 1st notch filter frequency is already set (Pn408 = n.□□□1), the 2nd notch filter frequency will be automatically set (Pn40C). Press the **MODE/SET** Key to return to step 5. Note: 1. If both the 1st and 2nd notch filter frequencies are already set (Pn408 = n.□1□1), no more notch filter frequencies can be set. 2. If the frequency detected by this function is not to be used, set Pn408 to n.□□□0 (Disable notch filter).
10	Fn206	MODE/SET ▲ ▼ DATA/◀	Press the **DATA/SHIFT** Key for approximately one second to return the display to **Fn206**.
11	Turn the power supply to the SERVOPACK OFF and ON again after you finish executing Easy FFT.		

Parameter Lists

14

This chapter provides information on the parameters.

14.1 List of Parameters 14-2

14.1.1 Interpreting the Parameter Lists 14-2
14.1.2 List of Parameters 14-3

14.2 Parameter Recording Table 14-34

14.1 List of Parameters

14.1.1 Interpreting the Parameter Lists

The types of Servomotors to which the parameter applies.
- All: The parameter is used for both Rotary Servomotors and Linear Servomotors.
- Rotary: The parameter is used for only Rotary Servomotors.
- Linear: The parameter is used for only Linear Servomotors.

Rotary Servomotor terms are used for parameters that are applicable to all Servomotors. If you are using a Linear Servomotor, you need to interpret the terms accordingly. Refer to the following section for details.

☞ ◆ *Differences in Terms for Rotary Servomotors and Linear Servomotors* on page xi

Indicates when a change to the parameter will be effective.

Parameter No.	Size	Name	Setting Range	Setting Unit	Default Setting	Applica-ble Motors	When Enabled	Classi-fication	Refer-ence
Pn000	2	Basic Function Selections 0	0000h to 10B1h	–	0000h	All	After restart	Setup	–

There are the following two classifications.
- Setup
- Tuning

Refer to the following section for details.

☞ *5.1.1 Parameter Classification* on page 5-4

If there are differences in the parameters for Rotary Servomotor and Linear Servomotor, information is provided for both.
- Top row: For Rotary Servomotors
- Bottom row: For Linear Servomotors

	Rotation Direction Selection / Movement Direction Selection		Reference
n.□□□X	0	Use CCW as the forward direction.	page 5-18
		Use the direction in which the linear encoder counts up as the forward direction.	
	1	Use CW as the forward direction. (Reverse Rotation Mode)	
		Use the direction in which the linear encoder counts down as the forward direction. (Reverse Movement Mode)	

	Control Method Selection		Reference
n.□□X□	0	Speed control with analog references	page 5-13
	1	Position control with pulse train references	
	2	Torque control with analog references	
	3	Internal set speed control with contact commands	
	4	Switching between internal set speed control with contact references and speed control with analog references	
	5	Switching between internal set speed control with contact references and position control with pulse train references	
	6	Switching between internal set speed control with contact references and torque control with analog references	
	7	Switching between position control with pulse train references and speed control with analog references	
	8	Switching between position control with pulse train references and torque control with analog references	
	9	Switching between torque control with analog references and speed control with analog references	
	A	Switching between speed control with analog references and speed control with zero clamping	
	B	Switching between position control with pulse train references and position control with reference pulse inhibition	

n.□X□□	Reserved parameter (Do not change.)

	Rotary/Linear Servomotor Startup Selection When Encoder Is Not Connected		Reference
n.X□□□	0	When an encoder is not connected, start as SERVOPACK for Rotary Servomotor.	page 5-16
	1	When an encoder is not connected, start as SERVOPACK for Linear Servomotor.	

14.1.2 List of Parameters

The following table lists the parameters.

Note: Do not change the following parameters from their default settings.
- Reserved parameters
- Parameters not given in this manual
- Parameters that are not valid for the Servomotor that you are using, as given in the parameter table

Parameter No.	Size	Name	Setting Range	Setting Unit	Default Setting	Applicable Motors	When Enabled	Classification	Reference
Pn000	2	Basic Function Selections 0	0000h to 10B1h	–	0000h	All	After restart	Setup	–

	Rotation Direction Selection / Movement Direction Selection		Reference
n.□□□X	0	Use CCW as the forward direction.	page 5-18
		Use the direction in which the linear encoder counts up as the forward direction.	
	1	Use CW as the forward direction. (Reverse Rotation Mode)	
		Use the direction in which the linear encoder counts down as the forward direction. (Reverse Movement Mode)	

	Control Method Selection		Reference
n.□□X□	0	Speed control with analog references	page 5-13
	1	Position control with pulse train references	
	2	Torque control with analog references	
	3	Internal set speed control with contact commands	
	4	Switching between internal set speed control with contact references and speed control with analog references	
	5	Switching between internal set speed control with contact references and position control with pulse train references	
	6	Switching between internal set speed control with contact references and torque control with analog references	
	7	Switching between position control with pulse train references and speed control with analog references	
	8	Switching between position control with pulse train references and torque control with analog references	
	9	Switching between torque control with analog references and speed control with analog references	
	A	Switching between speed control with analog references and speed control with zero clamping	
	B	Switching between position control with pulse train references and position control with reference pulse inhibition	

n.□X□□	Reserved parameter (Do not change.)

	Rotary/Linear Servomotor Startup Selection When Encoder Is Not Connected		Reference
n.X□□□	0	When an encoder is not connected, start as SERVOPACK for Rotary Servomotor.	page 5-16
	1	When an encoder is not connected, start as SERVOPACK for Linear Servomotor.	

Continued on next page.

Continued from previous page.

Parameter No.	Size	Name	Setting Range	Setting Unit	Default Setting	Applicable Motors	When Enabled	Classi-fication	Refer-ence
Pn001	2	Application Function Selections 1	0000h to 1142h	–	0000h	All	After restart	Setup	–

	Motor Stopping Method for Servo OFF and Group 1 Alarms		Reference
n.□□□X	0	Stop the motor by applying the dynamic brake.	page 5-41
	1	Stop the motor by the applying dynamic brake and then release the dynamic brake.	
	2	Coast the motor to a stop without the dynamic brake.	

	Overtravel Stopping Method		Reference
n.□□X□	0	Apply the dynamic brake or coast the motor to a stop (use the stopping method set in Pn001 = n.□□□X).	page 5-33
	1	Decelerate the motor to a stop using the torque set in Pn406 as the maximum torque and then servo-lock the motor.	
	2	Decelerate the motor to a stop using the torque set in Pn406 as the maximum torque and then let the motor coast.	
	3	Decelerate the motor to a stop using the deceleration time set in Pn30A and then servo-lock the motor.	
	4	Decelerate the motor to a stop using the deceleration time set in Pn30A and then let the motor coast.	

	Main Circuit Power Supply AC/DC Input Selection		Reference
n.□X□□	0	Input AC power as the main circuit power supply using the L1, L2, and L3 terminals (do not use shared converter).	page 5-14
	1	Input DC power as the main circuit power supply using the B1/⊕ and ⊖ 2 terminals or the B1 and ⊖ 2 terminals (use an external converter or the shared converter).	

	Warning Code Output Selection		Reference
n.X□□□	0	Output only alarm codes on the ALO1, ALO2, and ALO3 terminals.	page 6-10
	1	Output both warning codes and alarm codes on the ALO1, ALO2, and ALO3 terminals. However, while an warning code is being output, the ALM (Servo Alarm) output signal will remain ON (normal state).	

Continued on next page.

Continued from previous page.

Parameter No.	Size	Name	Setting Range	Setting Unit	Default Setting	Applicable Motors	When Enabled	Classi-fication	Refer-ence
Pn002	2	Application Function Selections 2	0000h to 4213h	–	0000h	–	After restart	Setup	–

n.□□□X	Speed/Position Control Option (T-REF Input Allocation)		Applicable Motors	Reference
	0	Do not use T-REF.	All	–
	1	Use T-REF as an external torque limit input.		page 6-69
	2	Use T-REF as a torque feedback input.		page 8-87
	3	Use T-REF as an external torque limit input when /P-CL or /N-CL is ON.		page 6-71

n.□□X□	Torque Control Option (V-REF Input Allocation)		Applicable Motors	Reference
	0	Do not use V-REF.	All	page 6-46
	1	Use V-REF as an external speed limit input.		

n.□X□□	Encoder Usage		Applicable Motors	Reference
	0	Use the encoder according to encoder specifications.	All	page 6-74
	1	Use the encoder as an incremental encoder.		
	2	Use the encoder as a single-turn absolute encoder.	Rotary	

n.X□□□	External Encoder Usage		Applicable Motors	Reference
	0	Do not use an external encoder.	Rotary	page 10-6
	1	The external encoder moves in the forward direction for CCW motor rotation.		
	2	Reserved parameter (Do not change.)		
	3	The external encoder moves in the reverse direction for CCW motor rotation.		
	4	Reserved parameter (Do not change.)		

Continued on next page.

Continued from previous page.

Parameter No.	Size	Name	Setting Range	Setting Unit	Default Setting	Applicable Motors	When Enabled	Classi-fication	Refer-ence
Pn006	2	Application Function Selections 6	0000h to 105Fh	–	0002h	All	Immedi-ately	Setup	page 9-10

n.□□XX	Analog Monitor 1 Signal Selection	
	00	Motor speed (1 V/1,000 min^{-1})
		Motor speed (1 V/1,000 mm/s)
	01	Speed reference (1 V/1,000 min^{-1})
		Speed reference (1 V/1,000 mm/s)
	02	Torque reference (1 V/100% rated torque)
		Force reference (1 V/100% rated force)
	03	Position deviation (0.05 V/reference unit)
	04	Position amplifier deviation (after electronic gear) (0.05 V/encoder pulse unit)
		Position amplifier deviation (after electronic gear) (0.05 V/linear encoder pulse unit)
	05	Position reference speed (1 V/1,000 min^{-1})
		Position reference speed (1 V/1,000 mm/s)
	06	Reserved parameter (Do not change.)
	07	Load-motor position deviation (0.01 V/reference unit)
	08	Positioning completion (positioning completed: 5 V, positioning not completed: 0 V)
	09	Speed feedforward (1 V/1,000 min^{-1})
		Speed feedforward (1 V/1,000 mm/s)
	0A	Torque feedforward (1 V/100% rated torque)
		Force feedforward (1 V/100% rated force)
	0B	Active gain (1st gain: 1 V, 2nd gain: 2 V)
	0C	Completion of position reference distribution (completed: 5 V, not completed: 0 V)
	0D	External encoder speed (1 V/1,000 min^{-1}: value at the motor shaft)
	0E	Reserved parameter (Do not change.)
	0F	Reserved parameter (Do not change.)
	10	Main circuit DC voltage
	11 to 5F	Reserved parameters (Do not change.)
n.□X□□	Reserved parameter (Do not change.)	
n.X□□□	Reserved parameter (Do not change.)	

Continued on next page.

Continued from previous page.

Parameter No.	Size	Name	Setting Range	Setting Unit	Default Setting	Applicable Motors	When Enabled	Classi-fication	Refer-ence
Pn007	2	Application Function Selections 7	0000h to 105Fh	–	0000h	All	Immedi-ately	Setup	page 9-10

	Analog Monitor 2 Signal Selection	
n.□□XX	00	Motor speed (1 V/1,000 min^{-1})
		Motor speed (1 V/1,000 mm/s)
	01	Speed reference (1 V/1,000 min^{-1})
		Speed reference (1 V/1,000 mm/s)
	02	Torque reference (1 V/100% rated torque)
		Force reference (1 V/100% rated force)
	03	Position deviation (0.05 V/reference unit)
	04	Position amplifier deviation (after electronic gear) (0.05 V/encoder pulse unit)
		Position amplifier deviation (after electronic gear) (0.05 V/linear encoder pulse unit)
	05	Position reference speed (1 V/1,000 min^{-1})
		Position reference speed (1 V/1,000 mm/s)
	06	Reserved parameter (Do not change.)
	07	Load-motor position deviation (0.01 V/reference unit)
	08	Positioning completion (positioning completed: 5 V, positioning not completed: 0 V)
	09	Speed feedforward (1 V/1,000 min^{-1})
		Speed feedforward (1 V/1,000 mm/s)
	0A	Torque feedforward (1 V/100% rated torque)
		Force feedforward (1 V/100% rated force)
	0B	Active gain (1st gain: 1 V, 2nd gain: 2 V)
	0C	Completion of position reference distribution (completed: 5 V, not completed: 0 V)
	0D	External encoder speed (1 V/1,000 min^{-1}: value at the motor shaft)
	0E	Reserved parameter (Do not change.)
	0F	Reserved parameter (Do not change.)
	10	Main circuit DC voltage
	11 to 5F	Reserved parameters (Do not change.)
n.□X□□	Reserved parameter (Do not change.)	
n.X□□□	Reserved parameter (Do not change.)	

Parameter No.	Size	Name	Setting Range	Setting Unit	Default Setting	Applicable Motors	When Enabled	Classi-fication	Refer-ence
Pn008	2	Application Function Selections 8	0000h to 7121h	–	0000h	Rotary	After restart	Setup	–

	Low Battery Voltage Alarm/Warning Selection		Reference
n.□□□X	0	Output alarm (A.830) for low battery voltage.	page 12-2
	1	Output warning (A.930) for low battery voltage.	

	Function Selection for Undervoltage		Reference
n.□□X□	0	Do not detect undervoltage.	page 6-14
	1	Detect undervoltage warning and limit torque at host controller.	
	2	Detect undervoltage warning and limit torque with Pn424 and Pn425 (i.e., only in SERVOPACK).	

	Warning Detection Selection		Reference
n.□X□□	0	Detect warnings.	page 12-48
	1	Do not detect warnings except for A.971.	
n.X□□□	Reserved parameter (Do not change.)		

Continued on next page.

Continued from previous page.

Parameter No.	Size	Name	Setting Range	Setting Unit	Default Setting	Applicable Motors	When Enabled	Classi-fication	Refer-ence
Pn009	2	Application Function Selections 9	0000h to 0121h	–	0010h	All	After restart	Tuning	–

n.□□□X	Reserved parameter (Do not change.)	

	Current Control Mode Selection		Reference
n.□□X□	0	Use current control mode 1.	page 8-73
	1	• SERVOPACK Models SGD7S-R70A, -R90A, -1R6A, -2R8A, -3R8A, -5R5A, and -7R6A: Use current control mode 1. • SERVOPACK Models SGD7S-120A, -180A, -200A, -330A, -470A, -550A, -590A, and -780A: Use current control mode 2.	
	2	Use current control mode 2.	

	Speed Detection Method Selection		Reference
n.□X□□	0	Use speed detection 1.	page 8-74
	1	Use speed detection 2.	

n.X□□□	Reserved parameter (Do not change.)

Parameter No.	Size	Name	Setting Range	Setting Unit	Default Setting	Applicable Motors	When Enabled	Classi-fication	Refer-ence
Pn00A	2	Application Function Selections A	0000h to 1044h	–	0001h	All	After restart	Setup	–

	Motor Stopping Method for Group 2 Alarms		Reference
n.□□□X	0	Apply the dynamic brake or coast the motor to a stop (use the stopping method set in Pn001 = n.□□□X).	page 5-42
	1	Decelerate the motor to a stop using the torque set in Pn406 as the maximum torque. Use the setting of Pn001 = n.□□□X for the status after stopping.	
	2	Decelerate the motor to a stop using the torque set in Pn406 as the maximum torque and then let the motor coast.	
	3	Decelerate the motor to a stop using the deceleration time set in Pn30A. Use the setting of Pn001 = n.□□□X for the status after stopping.	
	4	Decelerate the motor to a stop using the deceleration time set in Pn30A and then let the motor coast.	

	Stopping Method for Forced Stops		Reference
n.□□X□	0	Apply the dynamic brake or coast the motor to a stop (use the stopping method set in Pn001 = n.□□□X).	page 6-107
	1	Decelerate the motor to a stop using the torque set in Pn406 as the maximum torque. Use the setting of Pn001 = n.□□□X for the status after stopping.	
	2	Decelerate the motor to a stop using the torque set in Pn406 as the maximum torque and then let the motor coast.	
	3	Decelerate the motor to a stop using the deceleration time set in Pn30A. Use the setting of Pn001 = n.□□□X for the status after stopping.	
	4	Decelerate the motor to a stop using the deceleration time set in Pn30A and then let the motor coast.	

n.□X□□	Reserved parameter (Do not change.)

n.X□□□	Reserved parameter (Do not change.)

Continued on next page.

Continued from previous page.

Parameter No.	Size	Name	Setting Range	Setting Unit	Default Setting	Applicable Motors	When Enabled	Classi-fication	Refer-ence
Pn00B	2	Application Function Selections B	0000h to 1121h	–	0000h	All	After restart	Setup	–

	Operator Parameter Display Selection		Reference
n.□□□X	0	Display only setup parameters.	page 5-4
	1	Display all parameters.	

	Motor Stopping Method for Group 2 Alarms		Reference
n.□□X□	0	Stop the motor by setting the speed reference to 0.	page 5-42
	1	Apply the dynamic brake or coast the motor to a stop (use the stopping method set in Pn001 = n.□□□X).	
	2	Set the stopping method with Pn00A = n.□□□X.	

	Power Input Selection for Three-phase SERVOPACK		Reference
n.□X□□	0	Use a three-phase power supply input.	page 5-15
	1	Use a three-phase power supply input as a single-phase power supply input.	

n.X□□□	Reserved parameter (Do not change.)

Pn00C	2	Application Function Selections C	0000h to 0131h	–	0000h	–	After restart	Setup	page 7-27

	Function Selection for Test without a Motor		Applicable Motors
n.□□□X	0	Disable tests without a motor.	All
	1	Enable tests without a motor.	

	Encoder Resolution for Tests without a Motor		Applicable Motors
n.□□X□	0	Use 13 bits.	Rotary
	1	Use 20 bits.	
	2	Use 22 bits.	
	3	Use 24 bits.	

	Encoder Type Selection for Tests without a Motor		Applicable Motors
n.□X□□	0	Use an incremental encoder.	All
	1	Use an absolute encoder.	

n.X□□□	Reserved parameter (Do not change.)

Pn00D	2	Application Function Selections D	0000h to 2001h	–	0000h	All	Immedi-ately	Setup	page 5-34

n.□□□X	Reserved parameter (Do not change.)
n.□□X□	Reserved parameter (Do not change.)
n.□X□□	Reserved parameter (Do not change.)

	Overtravel Warning Detection Selection	
n.X□□□	0	Do not detect overtravel warnings.
	1	Detect overtravel warnings.
	2	Reserved parameter (Do not change.)

Continued on next page.

Continued from previous page.

Parameter No.	Size	Name	Setting Range	Setting Unit	Default Setting	Applicable Motors	When Enabled	Classi-fication	Refer-ence
Pn00F	2	Application Function Selections F	0000h to 2011h	–	0000h	All	After restart	Setup	–

n.□□□X	Preventative Maintenance Warning Selection		Reference
	0	Do not detect preventative maintenance warnings.	page 9-17
	1	Detect preventative maintenance warnings.	
n.□□X□	Reserved parameter (Do not change.)		
n.□X□□	Reserved parameter (Do not change.)		
n.X□□□	Reserved parameter (Do not change.)		

Parameter No.	Size	Name	Setting Range	Setting Unit	Default Setting	Applicable Motors	When Enabled	Classi-fication	Refer-ence
Pn010	2	Axis Address Selection for UART/USB Commu-nications	0000h to 007Fh	–	0001h	All	After restart	Setup	–
Pn021	2	Reserved parameter (Do not change.)	–	–	0000h	All	–	–	–
Pn022	2	Reserved parameter (Do not change.)	–	–	0000h	All	–	–	–
Pn040	2	Σ-V Compatible Func-tion Switch	0000h to 2111h	–	0000h	–	After restart	Setup	–

n.□□□X	Reserved parameter (Do not change.)		
n.□□X□	Encoder Resolution Compatibility Selection		Applicable Motors
	0	Use the encoder resolution of the Servomotor.	Rotary
	1	Use a resolution of 20 bits when connected to an SGM7J, SGM7A, SGM7P, SGM7G, SGM7E, or SGM7F Servomotor.	
n.□X□□	Reserved parameter (Do not change.)		
n.X□□□	Reserved parameter (Do not change.)		

Parameter No.	Size	Name	Setting Range	Setting Unit	Default Setting	Applicable Motors	When Enabled	Classi-fication	Refer-ence
Pn080	2	Application Function Selections 80	0000h to 1111h	–	0000h	Linear	After restart	Setup	–

n.□□□X	Polarity Sensor Selection		Reference
	0	Use polarity sensor.	page 5-26
	1	Do not use polarity sensor.	
n.□□X□	Motor Phase Sequence Selection		Reference
	0	Set a phase-A lead as a phase sequence of U, V, and W.	page 5-24
	1	Set a phase-B lead as a phase sequence of U, V, and W.	
n.□X□□	Reserved parameter (Do not change.)		
n.X□□□	Calculation Method for Maximum Speed or Encoder Output Pulses		Reference
	0	Calculate the encoder output pulse setting for a fixed maximum speed.	page 15-9
	1	Calculate the maximum speed for a fixed encoder output pulse setting.	

Continued on next page.

Continued from previous page.

Parameter No.	Size	Name	Setting Range	Setting Unit	Default Setting	Applicable Motors	When Enabled	Classification	Reference
Pn081	2	Application Function Selections 81	0000h to 1111h	–	0000h	All	After restart	Setup	page 6-50

n.□□□X	Phase-C Pulse Output Selection	
	0	Output phase-C pulses only in the forward direction.
	1	Output phase-C pulses in both the forward and reverse directions.
n.□□X□	Reserved parameter (Do not change.)	
n.□X□□	Reserved parameter (Do not change.)	
n.X□□□	Reserved parameter (Do not change.)	

Pn100	2	Speed Loop Gain	10 to 20,000	0.1 Hz	400	All	Immediately	Tuning	page 8-76
Pn101	2	Speed Loop Integral Time Constant	15 to 51,200	0.01 ms	2000	All	Immediately	Tuning	page 8-76
Pn102	2	Position Loop Gain	10 to 20,000	0.1/s	400	All	Immediately	Tuning	page 8-76
Pn103	2	Moment of Inertia Ratio	0 to 20,000	1%	100	All	Immediately	Tuning	page 8-76
Pn104	2	Second Speed Loop Gain	10 to 20,000	0.1 Hz	400	All	Immediately	Tuning	page 8-66
Pn105	2	Second Speed Loop Integral Time Constant	15 to 51,200	0.01 ms	2000	All	Immediately	Tuning	page 8-66
Pn106	2	Second Position Loop Gain	10 to 20,000	0.1/s	400	All	Immediately	Tuning	page 8-66
Pn109	2	Feedforward	0 to 100	1%	0	All	Immediately	Tuning	page 8-87
Pn10A	2	Feedforward Filter Time Constant	0 to 6,400	0.01 ms	0	All	Immediately	Tuning	page 8-87
Pn10B	2	Gain Application Selections	0000h to 5334h	–	0000h	All	–	Setup	–

n.□□□X	Mode Switching Selection		When Enabled	Reference
	0	Use the internal torque reference as the condition (level setting: Pn10C).	Immediately	page 8-90
	1	Use the speed reference as the condition (level setting: Pn10D).		
		Use the speed reference as the condition (level setting: Pn181).		
	2	Use the acceleration reference as the condition (level setting: Pn10E).		
		Use the acceleration reference as the condition (level setting: Pn182).		
	3	Use the position deviation as the condition (level setting: Pn10F).		
	4	Do not use mode switching.		

n.□□X□	Speed Loop Control Method		When Enabled	Reference
	0	PI control	After restart	page 8-82
	1	I-P control		
	2 and 3	Reserved parameters (Do not change.)		
n.□X□□	Reserved parameter (Do not change.)			
n.X□□□	Reserved parameter (Do not change.)			

Pn10C	2	Mode Switching Level for Torque Reference	0 to 800	1%	200	All	Immediately	Tuning	page 8-90

Continued on next page.

Continued from previous page.

Parameter No.	Size	Name	Setting Range	Setting Unit	Default Setting	Applicable Motors	When Enabled	Classification	Reference
Pn10D	2	Mode Switching Level for Speed Reference	0 to 10,000	1 min^{-1}	0	Rotary	Immediately	Tuning	page 8-90
Pn10E	2	Mode Switching Level for Acceleration	0 to 30,000	1 min^{-1}/s	0	Rotary	Immediately	Tuning	page 8-90
Pn10F	2	Mode Switching Level for Position Deviation	0 to 10,000	1 reference unit	0	All	Immediately	Tuning	page 8-90
Pn11F	2	Position Integral Time Constant	0 to 50,000	0.1 ms	0	All	Immediately	Tuning	page 8-92
Pn121	2	Friction Compensation Gain	10 to 1,000	1%	100	All	Immediately	Tuning	page 8-66, page 8-70
Pn122	2	Second Friction Compensation Gain	10 to 1,000	1%	100	All	Immediately	Tuning	page 8-66, page 8-70
Pn123	2	Friction Compensation Coefficient	0 to 100	1%	0	All	Immediately	Tuning	page 8-70
Pn124	2	Friction Compensation Frequency Correction	-10,000 to 10,000	0.1 Hz	0	All	Immediately	Tuning	page 8-70
Pn125	2	Friction Compensation Gain Correction	1 to 1,000	1%	100	All	Immediately	Tuning	page 8-70
Pn131	2	Gain Switching Time 1	0 to 65,535	1 ms	0	All	Immediately	Tuning	page 8-66
Pn132	2	Gain Switching Time 2	0 to 65,535	1 ms	0	All	Immediately	Tuning	page 8-66
Pn135	2	Gain Switching Waiting Time 1	0 to 65,535	1 ms	0	All	Immediately	Tuning	page 8-66
Pn136	2	Gain Switching Waiting Time 2	0 to 65,535	1 ms	0	All	Immediately	Tuning	page 8-66
Pn139	2	Automatic Gain Switching Selections 1	0000h to 0052h	–	0000h	All	Immediately	Tuning	page 8-66

	Gain Switching Selection	
n.□□□X	0	Use manual gain switching. The gain is switched manually with the /G-SEL (Gain Selection) signal.
	1	Reserved parameter (Do not change.)
	2	Use automatic gain switching pattern 1. The gain settings 1 switch automatically to 2 when switching condition A is satisfied. The gain settings 2 switch automatically to 1 when switching condition A is not satisfied.

	Gain Switching Condition A	
n.□□X□	0	/COIN (Positioning Completion Output) signal turns ON.
	1	/COIN (Positioning Completion Output) signal turns OFF.
	2	/NEAR (Near Output) signal turns ON.
	3	/NEAR (Near Output) signal turns OFF.
	4	Position reference filter output is 0 and reference pulse input is OFF.
	5	Position reference pulse input is ON.

n.□X□□	Reserved parameter (Do not change.)
n.X□□□	Reserved parameter (Do not change.)

Pn13D	2	Current Gain Level	100 to 2,000	1%	2000	All	Immediately	Tuning	page 8-73

Continued on next page.

Continued from previous page.

Parameter No.	Size	Name	Setting Range	Setting Unit	Default Setting	Applicable Motors	When Enabled	Classification	Reference
Pn140	2	Model Following Control-Related Selections	0000h to 1121h	–	0100h	All	Immediately	Tuning	–

	Model Following Control Selection		Reference
n.□□□X	0	Do not use model following control.	page 8-83
	1	Use model following control.	

	Vibration Suppression Selection		Reference
n.□□X□	0	Do not perform vibration suppression.	page 8-83
	1	Perform vibration suppression for a specific frequency.	
	2	Perform vibration suppression for two specific frequencies.	

	Vibration Suppression Adjustment Selection		Reference
n.□X□□	0	Do not adjust vibration suppression automatically during execution of autotuning without a host reference, autotuning with a host reference, and custom tuning.	page 8-33
	1	Adjust vibration suppression automatically during execution of autotuning without a host reference, autotuning with a host reference, and custom tuning.	

	Speed Feedforward (VFF)/Torque Feedforward (TFF) Selection		Reference
n.X□□□	0	Do not use model following control and speed/torque feedforward together.	page 8-33, page 8-59
	1	Use model following control and speed/torque feedforward together.	

Pn141	2	Model Following Control Gain	10 to 20,000	0.1/s	500	All	Immediately	Tuning	page 8-83
Pn142	2	Model Following Control Gain Correction	500 to 2,000	0.1%	1000	All	Immediately	Tuning	page 8-66
Pn143	2	Model Following Control Bias in the Forward Direction	0 to 10,000	0.1%	1000	All	Immediately	Tuning	page 8-83
Pn144	2	Model Following Control Bias in the Reverse Direction	0 to 10,000	0.1%	1000	All	Immediately	Tuning	page 8-83
Pn145	2	Vibration Suppression 1 Frequency A	10 to 2,500	0.1 Hz	500	All	Immediately	Tuning	page 8-59
Pn146	2	Vibration Suppression 1 Frequency B	10 to 2,500	0.1 Hz	700	All	Immediately	Tuning	page 8-59
Pn147	2	Model Following Control Speed Feedforward Compensation	0 to 10,000	0.1%	1000	All	Immediately	Tuning	page 8-83
Pn148	2	Second Model Following Control Gain	10 to 20,000	0.1/s	500	All	Immediately	Tuning	page 8-66
Pn149	2	Second Model Following Control Gain Correction	500 to 2,000	0.1%	1000	All	Immediately	Tuning	page 8-66
Pn14A	2	Vibration Suppression 2 Frequency	10 to 2,000	0.1 Hz	800	All	Immediately	Tuning	page 8-59
Pn14B	2	Vibration Suppression 2 Correction	10 to 1,000	1%	100	All	Immediately	Tuning	page 8-59

Continued on next page.

Continued from previous page.

Parameter No.	Size	Name	Setting Range	Setting Unit	Default Setting	Applicable Motors	When Enabled	Classification	Reference
Pn14F	2	Control-Related Selections	0000h to 0021h	–	0021h	All	After restart	Tuning	–

	Model Following Control Type Selection		Reference
n.□□□X	0	Use model following control type 1.	page 8-86
	1	Use model following control type 2.	

	Tuning-less Type Selection		Reference
n.□□X□	0	Use tuning-less type 1.	page 8-13
	1	Use tuning-less type 2.	
	2	Use tuning-less type 3.	

n.□X□□	Reserved parameter (Do not change.)
n.X□□□	Reserved parameter (Do not change.)

Pn160	2	Anti-Resonance Control-Related Selections	0000h to 0011h	–	0010h	All	Immediately	Tuning	–

	Anti-Resonance Control Selection		Reference
n.□□□X	0	Do not use anti-resonance control.	page 8-51
	1	Use anti-resonance control.	

	Anti-Resonance Control Adjustment Selection		Reference
n.□□X□	0	Do not adjust anti-resonance control automatically during execution of autotuning without a host reference, autotuning with a host reference, and custom tuning.	page 8-32
	1	Adjust anti-resonance control automatically during execution of autotuning without a host reference, autotuning with a host reference, and custom tuning.	

n.□X□□	Reserved parameter (Do not change.)
n.X□□□	Reserved parameter (Do not change.)

Pn161	2	Anti-Resonance Frequency	10 to 20,000	0.1 Hz	1000	All	Immediately	Tuning	page 8-51
Pn162	2	Anti-Resonance Gain Correction	1 to 1,000	1%	100	All	Immediately	Tuning	page 8-51
Pn163	2	Anti-Resonance Damping Gain	0 to 300	1%	0	All	Immediately	Tuning	page 8-51
Pn164	2	Anti-Resonance Filter Time Constant 1 Correction	-1,000 to 1,000	0.01 ms	0	All	Immediately	Tuning	page 8-51
Pn165	2	Anti-Resonance Filter Time Constant 2 Correction	-1,000 to 1,000	0.01 ms	0	All	Immediately	Tuning	page 8-51
Pn166	2	Anti-Resonance Damping Gain 2	0 to 1,000	1%	0	All	Immediately	Tuning	page 8-54

Continued on next page.

Continued from previous page.

Parameter No.	Size	Name	Setting Range	Setting Unit	Default Setting	Applicable Motors	When Enabled	Classi-fication	Refer-ence
Pn170	2	Tuning-less Function-Related Selections	0000h to 2711h	–	1401h	All	–	Setup	page 8-12

n.□□□X	Tuning-less Selection		When Enabled
	0	Disable tuning-less function.	After restart
	1	Enable tuning-less function.	

n.□□X□	Speed Control Method		When Enabled
	0	Use for speed control.	After restart
	1	Use for speed control and use host controller for position control.	

n.□X□□	Rigidity Level		When Enabled
	0 to 7	Set the rigidity level.	Immedi-ately

n.X□□□	Tuning-less Load Level		When Enabled
	0 to 2	Set the load level for the tuning-less function.	Immedi-ately

Pn181	2	Mode Switching Level for Speed Reference	0 to 10,000	1 mm/s	0	Linear	Immedi-ately	Tuning	page 8-90
Pn182	2	Mode Switching Level for Acceleration	0 to 30,000	1 mm/s^2	0	Linear	Immedi-ately	Tuning	page 8-90
Pn200	2	Position Control Refer-ence Form Selections	0000h to 2236h	–	0000h	All	After restart	Setup	–

n.□□□X	Reference Pulse Form		Reference
	0	Sign and pulse train, positive logic.	page 6-31
	1	CW and CCW pulse trains, positive logic	
	2	Two-phase pulse trains with 90° phase differential (phase A and phase B) ×1, positive logic	
	3	Two-phase pulse trains with 90° phase differential (phase A and phase B) ×2, positive logic	
	4	Two-phase pulse trains with 90° phase differential (phase A and phase B) ×4, positive logic	
	5	Sign and pulse train, negative logic.	
	6	CW and CCW pulse trains, negative logic	

n.□□X□	Clear Signal Form		Reference
	0	Clear position deviation when the signal is at high level.	page 6-33
	1	Clear position deviation on the rising edge of the signal.	
	2	Clear position deviation when the signal is at low level.	
	3	Clear position deviation on the falling edge of the signal.	

n.□X□□	Clear Operation		Reference
	0	Clear position deviation at a base block (at servo OFF or when alarm occurs).	page 6-33
	1	Do not clear position error (cleared only with CLR (Clear Position Deviation) signal).	
	2	Clear position deviation when an alarm occurs.	

n.X□□□	Filter Selection		Reference
	0	Use the reference input filter for a line-driver signal. (1 Mpps max.)	page 6-31
	1	Use the reference input filter for an open-collector signal. (200 kpps max.)	
	2	Use reference input filter 2 for a line-driver signal. (1 to 4 Mpps)	

Continued on next page.

Continued from previous page.

Parameter No.	Size	Name	Setting Range	Setting Unit	Default Setting	Applicable Motors	When Enabled	Classi-fication	Refer-ence
Pn205	2	Multiturn Limit	0 to 65,535	1 rev	65535	Rotary	After restart	Setup	page 6-83
Pn207	2	Position Control Func-tion Selections	0000h to 2210h	–	0000h	All	After restart	Setup	–

n.□□□X	Reserved parameter (Do not change.)	

	Position Control Option		Reference
n.□□X□	0	Do not use V-REF.	page 8-89
	1	Use V-REF as a speed feedback input.	

n.□X□□	Reserved parameter (Do not change.)	

	/COIN (Positioning Completion Output) Signal Output Timing		Refer-ence
n.X□□□	0	Output when the absolute value of the position deviation is the same or less than the setting of Pn522 (Positioning Completed Width).	page 6-37
	1	Output when the absolute value of the position error is the same or less than the setting of Pn522 (Positioning Completed Width) and the reference after the position reference filter is 0.	
	2	Output when the absolute value of the position error is the same or less than the setting of Pn522 (Positioning Completed Width) and the reference input is 0.	

Pn20A	4	Number of External Encoder Scale Pitches	4 to 1,048,576	1 scale pitch/ revolu-tion	32768	Rotary	After restart	Setup	page 10-7
Pn20E	4	Electronic Gear Ratio (Numerator)	1 to 1,073,741,824	1	64	All	After restart	Setup	page 5-47
Pn210	4	Electronic Gear Ratio (Denominator)	1 to 1,073,741,824	1	1	All	After restart	Setup	page 5-47
Pn212	4	Number of Encoder Output Pulses	16 to 1,073,741,824	1 P/Rev	2048	Rotary	After restart	Setup	page 6-53
Pn216	2	Position Reference Acceleration/Decelera-tion Time Constant	0 to 65,535	0.1 ms	0	All	Immedi-ately after the motor stops	Setup	page 6-35
Pn217	2	Average Position Refer-ence Movement Time	0 to 10,000	0.1 ms	0	All	Immedi-ately after the motor stops	Setup	page 6-35
Pn218	2	Reference Pulse Input Multiplier	1 to 100	× 1	1	All	Immedi-ately	Setup	page 6-34
Pn22A	2	Fully-closed Control Selections	0000h to 1003h	–	0000h	Rotary	After restart	Setup	page 10-10

n.□□□X	Reserved parameter (Do not change.)	
n.□□X□	Reserved parameter (Do not change.)	
n.□X□□	Reserved parameter (Do not change.)	

	Fully-closed Control Speed Feedback Selection	
n.X□□□	0	Use motor encoder speed.
	1	Use external encoder speed.

Pn281	2	Encoder Output Resolu-tion	1 to 4,096	1 edge/ pitch	20	All	After restart	Setup	page 6-54
Pn282	4	Linear Encoder Scale Pitch	0 to 6,553,600	0.01 µm	0	Linear	After restart	Setup	page 5-19

Continued on next page.

Continued from previous page.

Parameter No.	Size	Name	Setting Range	Setting Unit	Default Setting	Applicable Motors	When Enabled	Classi-fication	Refer-ence
Pn300	2	Speed Reference Input Gain	150 to 3,000	0.01 V/ Rated motor speed	600	All	Immedi-ately	Setup	page 6-19, page 6-47, page 8-89
Pn301	2	Internal Set Speed 1	0 to 10,000	Rotary: 1 min^{-1} Direct Drive: 0.1 min^{-1}	100	Rotary	Immedi-ately	Setup	page 6-55
Pn302	2	Internal Set Speed 2	0 to 10,000	Rotary: 1 min^{-1} Direct Drive: 0.1 min^{-1}	200	Rotary	Immedi-ately	Setup	page 6-55
Pn303	2	Internal Set Speed 3	0 to 10,000	Rotary: 1 min^{-1} Direct Drive: 0.1 min^{-1}	300	Rotary	Immedi-ately	Setup	page 6-55
Pn304	2	Jogging Speed	0 to 10,000	Rotary: 1 min^{-1} Direct Drive: 0.1 min^{-1}	500	Rotary	Immedi-ately	Setup	page 7-7
Pn305	2	Soft Start Acceleration Time	0 to 10,000	1 ms	0	All	Immedi-ately	Setup	page 6-24
Pn306	2	Soft Start Deceleration Time	0 to 10,000	1 ms	0	All	Immedi-ately	Setup	page 6-24
Pn307	2	Speed Reference Filter Time Constant	0 to 65,535	0.01 ms	40	All	Immedi-ately	Setup	page 6-24
Pn308	2	Speed Feedback Filter Time Constant	0 to 65,535	0.01 ms	0	All	Immedi-ately	Setup	page 8-82
Pn30A	2	Deceleration Time for Servo OFF and Forced Stops	0 to 10,000	1 ms	0	All	Immedi-ately	Setup	page 5-34
Pn30C	2	Speed Feedforward Average Movement Time	0 to 5,100	0.1 ms	0	All	Immedi-ately	Setup	page 8-89
Pn310	2	Vibration Detection Selections	0000h to 0002h	–	0000h	All	Immedi-ately	Setup	page 6-99

	Vibration Detection Selection	
n.□□□X	0	Do not detect vibration.
	1	Output a warning (A.911) if vibration is detected.
	2	Output an alarm (A.520) if vibration is detected.
n.□□X□	Reserved parameter (Do not change.)	
n.□X□□	Reserved parameter (Do not change.)	
n.X□□□	Reserved parameter (Do not change.)	

Pn311	2	Vibration Detection Sen-sitivity	50 to 500	1%	100	All	Immedi-ately	Tuning	page 6-99
Pn312	2	Vibration Detection Level	0 to 5,000	1 min^{-1}	50	Rotary	Immedi-ately	Tuning	page 6-99
Pn316	2	Maximum Motor Speed	0 to 65,535	1 min^{-1}	10000	Rotary	After restart	Setup	page 6-16
Pn324	2	Moment of Inertia Cal-culation Starting Level	0 to 20,000	1%	300	All	Immedi-ately	Setup	page 8-31
Pn380	2	Internal Set Speed 1	0 to 10,000	1 mm/s	10	Linear	Immedi-ately	Setup	page 6-55

Continued on next page.

Continued from previous page.

Parameter No.	Size	Name	Setting Range	Setting Unit	Default Setting	Applicable Motors	When Enabled	Classification	Reference
Pn381	2	Internal Set Speed 2	0 to 10,000	1 mm/s	20	Linear	Immediately	Setup	page 6-55
Pn382	2	Internal Set Speed 3	0 to 10,000	1 mm/s	30	Linear	Immediately	Setup	page 6-55
Pn383	2	Jogging Speed	0 to 10,000	1 mm/s	50	Linear	Immediately	Setup	page 7-7
Pn384	2	Vibration Detection Level	0 to 5,000	1 mm/s	10	Linear	Immediately	Tuning	page 6-99
Pn385	2	Maximum Motor Speed	1 to 100	100 mm/s	50	Linear	After restart	Setup	page 6-16
Pn400	2	Torque Reference Input Gain	10 to 100	0.1 V/ rated torque	30	All	Immediately	Setup	page 6-41, page 8-88
Pn401	2	First Stage First Torque Reference Filter Time Constant	0 to 65,535	0.01 ms	100	All	Immediately	Tuning	page 8-79
Pn402	2	Forward Torque Limit	0 to 800	1%*1	800	Rotary	Immediately	Setup	page 6-64
Pn403	2	Reverse Torque Limit	0 to 800	1%*1	800	Rotary	Immediately	Setup	page 6-64
Pn404	2	Forward External Torque Limit	0 to 800	1%*1	100	All	Immediately	Setup	page 6-65, page 6-70
Pn405	2	Reverse External Torque Limit	0 to 800	1%*1	100	All	Immediately	Setup	page 6-65, page 6-70
Pn406	2	Emergency Stop Torque	0 to 800	1%*1	800	All	Immediately	Setup	page 5-33
Pn407	2	Speed Limit during Torque Control	0 to 10,000	1 min^{-1}	10000	Rotary	Immediately	Setup	page 6-46
Pn408	2	Torque-Related Function Selections	0000h to 1111h	–	0000h	All	–	Setup	–

n.□□□X	Notch Filter Selection 1		When Enabled	Reference
	0	Disable first stage notch filter.	Immediately	page 8-79
	1	Enable first stage notch filter.		

n.□□X□	Speed Limit Selection		When Enabled	Reference
	0	Use the smaller of the maximum motor speed and the setting of Pn407 as the speed limit.	After restart	page 6-46
		Use the smaller of the maximum motor speed and the setting of Pn480 as the speed limit.		
	1	Use the smaller of the overspeed alarm detection speed and the setting of Pn407 as the speed limit.		
		Use the smaller of the overspeed alarm detection speed and the setting of Pn480 as the speed limit.		

n.□X□□	Notch Filter Selection 2		When Enabled	Reference
	0	Disable second stage notch filter.	Immediately	page 8-79
	1	Enable second stage notch filter.		

n.X□□□	Friction Compensation Function Selection		When Enabled	Reference
	0	Disable friction compensation.	Immediately	page 8-70
	1	Enable friction compensation.		

Pn409	2	First Stage Notch Filter Frequency	50 to 5,000	1 Hz	5000	All	Immediately	Tuning	page 8-79

Continued on next page.

Continued from previous page.

Parameter No.	Size	Name	Setting Range	Setting Unit	Default Setting	Applicable Motors	When Enabled	Classification	Reference
Pn40A	2	First Stage Notch Filter Q Value	50 to 1,000	0.01	70	All	Immediately	Tuning	page 8-79
Pn40B	2	First Stage Notch Filter Depth	0 to 1,000	0.001	0	All	Immediately	Tuning	page 8-79
Pn40C	2	Second Stage Notch Filter Frequency	50 to 5,000	1 Hz	5000	All	Immediately	Tuning	page 8-79
Pn40D	2	Second Stage Notch Filter Q Value	50 to 1,000	0.01	70	All	Immediately	Tuning	page 8-79
Pn40E	2	Second Stage Notch Filter Depth	0 to 1,000	0.001	0	All	Immediately	Tuning	page 8-79
Pn40F	2	Second Stage Second Torque Reference Filter Frequency	100 to 5,000	1 Hz	5000	All	Immediately	Tuning	page 8-79
Pn410	2	Second Stage Second Torque Reference Filter Q Value	50 to 100	0.01	50	All	Immediately	Tuning	page 8-79
Pn412	2	First Stage Second Torque Reference Filter Time Constant	0 to 65,535	0.01 ms	100	All	Immediately	Tuning	page 8-66
Pn415	2	T-REF Filter Time Constant	0 to 65,535	0.01 ms	0	All	Immediately	Setup	page 6-45
Pn416	2	Torque-Related Function Selections 2	0000h to 1111h	–	0000h	All	Immediately	Setup	page 8-81

n.□□□X	Notch Filter Selection 3	
	0	Disable third stage notch filter.
	1	Enable third stage notch filter.
n.□□X□	Notch Filter Selection 4	
	0	Disable fourth stage notch filter.
	1	Enable fourth stage notch filter.
n.□X□□	Notch Filter Selection 5	
	0	Disable fifth stage notch filter.
	1	Enable fifth stage notch filter.
n.X□□□	Reserved parameter (Do not change.)	

Pn417	2	Third Stage Notch Filter Frequency	50 to 5,000	1 Hz	5000	All	Immediately	Tuning	page 8-81
Pn418	2	Third Stage Notch Filter Q Value	50 to 1,000	0.01	70	All	Immediately	Tuning	page 8-81
Pn419	2	Third Stage Notch Filter Depth	0 to 1,000	0.001	0	All	Immediately	Tuning	page 8-81
Pn41A	2	Fourth Stage Notch Filter Frequency	50 to 5,000	1 Hz	5000	All	Immediately	Tuning	page 8-81
Pn41B	2	Fourth Stage Notch Filter Q Value	50 to 1,000	0.01	70	All	Immediately	Tuning	page 8-81
Pn41C	2	Fourth Stage Notch Filter Depth	0 to 1,000	0.001	0	All	Immediately	Tuning	page 8-81
Pn41D	2	Fifth Stage Notch Filter Frequency	50 to 5,000	1 Hz	5000	All	Immediately	Tuning	page 8-81
Pn41E	2	Fifth Stage Notch Filter Q Value	50 to 1,000	0.01	70	All	Immediately	Tuning	page 8-81
Pn41F	2	Fifth Stage Notch Filter Depth	0 to 1,000	0.001	0	All	Immediately	Tuning	page 8-80

Continued on next page.

Continued from previous page.

Parameter No.	Size	Name	Setting Range	Setting Unit	Default Setting	Applicable Motors	When Enabled	Classification	Reference
Pn423	2	Speed Ripple Compensation Selections	0000h to 1111h	–	0000h	Rotary	–	Setup	page 8-64

n.□□□X	Speed Ripple Compensation Function Selection		When Enabled
	0	Disable speed ripple compensation.	Immediately
	1	Enable speed ripple compensation.	

n.□□X□	Speed Ripple Compensation Information Disagreement Warning Detection Selection		When Enabled
	0	Detect A.942 alarms.	After restart
	1	Do not detect A.942 alarms.	

n.□X□□	Speed Ripple Compensation Enable Condition Selection		When Enabled
	0	Speed reference	After restart
	1	Motor speed	

n.X□□□	Reserved parameter (Do not change.)

Pn424	2	Torque Limit at Main Circuit Voltage Drop	0 to 100	1%*1	50	All	Immediately	Setup	page 6-15
Pn425	2	Release Time for Torque Limit at Main Circuit Voltage Drop	0 to 1,000	1 ms	100	All	Immediately	Setup	page 6-15
Pn426	2	Torque Feedforward Average Movement Time	0 to 5,100	0.1 ms	0	All	Immediately	Setup	page 8-88
Pn427	2	Speed Ripple Compensation Enable Speed	0 to 10,000	1 min^{-1}	0	Rotary	Immediately	Tuning	page 8-64
Pn456	2	Sweep Torque Reference Amplitude	1 to 800	1%	15	All	Immediately	Tuning	page 8-98
Pn460	2	Notch Filter Adjustment Selections 1	0000h to 0101h	–	0101h	All	Immediately	Tuning	page 8-15, page 8-32

n.□□□X	Notch Filter Adjustment Selection 1	
	0	Do not adjust the first stage notch filter automatically during execution of autotuning without a host reference, autotuning with a host reference, and custom tuning.
	1	Adjust the first stage notch filter automatically during execution of autotuning without a host reference, autotuning with a host reference, and custom tuning.

n.□□X□	Reserved parameter (Do not change.)

n.□X□□	Notch Filter Adjustment Selection 2	
	0	Do not adjust the second stage notch filter automatically when the tuning-less function is enabled or during execution of autotuning without a host reference, autotuning with a host reference, and custom tuning.
	1	Adjust the second stage notch filter automatically when the tuning-less function is enabled or during execution of autotuning without a host reference, autotuning with a host reference, and custom tuning.

n.X□□□	Reserved parameter (Do not change.)

Continued on next page.

Continued from previous page.

Parameter No.	Size	Name	Setting Range	Setting Unit	Default Setting	Applicable Motors	When Enabled	Classi-fication	Refer-ence
Pn475	2	Gravity Compensation-Related Selections	0000h to 0001h	–	0000h	All	After restart	Setup	page 8-71
Pn476	2	Gravity Compensation Torque	-1,000 to 1,000	0.1%	0	All	Immedi-ately	Tuning	page 8-71
Pn480	2	Speed Limit during Force Control	0 to 10,000	1 mm/s	10000	Linear	Immedi-ately	Setup	page 6-46
Pn481	2	Polarity Detection Speed Loop Gain	10 to 20,000	0.1 Hz	400	Linear	Immedi-ately	Tuning	–
Pn482	2	Polarity Detection Speed Loop Integral Time Constant	15 to 51,200	0.01 ms	3000	Linear	Immedi-ately	Tuning	–
Pn483	2	Forward Force Limit	0 to 800	1%*1	30	Linear	Immedi-ately	Setup	page 6-64
Pn484	2	Reverse Force Limit	0 to 800	1%*1	30	Linear	Immedi-ately	Setup	page 6-64
Pn485	2	Polarity Detection Refer-ence Speed	0 to 100	1 mm/s	20	Linear	Immedi-ately	Tuning	–
Pn486	2	Polarity Detection Refer-ence Acceleration/ Deceleration Time	0 to 100	1 ms	25	Linear	Immedi-ately	Tuning	–
Pn487	2	Polarity Detection Con-stant Speed Time	0 to 300	1 ms	0	Linear	Immedi-ately	Tuning	–
Pn488	2	Polarity Detection Refer-ence Waiting Time	50 to 500	1 ms	100	Linear	Immedi-ately	Tuning	–
Pn48E	2	Polarity Detection Range	1 to 65,535	1 mm	10	Linear	Immedi-ately	Tuning	–
Pn490	2	Polarity Detection Load Level	0 to 20,000	1%	100	Linear	Immedi-ately	Tuning	–
Pn495	2	Polarity Detection Con-firmation Force Refer-ence	0 to 200	1%	100	Linear	Immedi-ately	Tuning	–
Pn498	2	Polarity Detection Allow-able Error Range	0 to 30	1 deg	10	Linear	Immedi-ately	Tuning	–
Pn49F	2	Speed Ripple Compen-sation Enable Speed	0 to 10,000	1 mm/s	0	Linear	Immedi-ately	Tuning	page 8-64
Pn501	2	Zero Clamping Level	0 to 10,000	1 min^{-1}	10	Rotary	Immedi-ately	Setup	page 6-25
Pn502	2	Rotation Detection Level	1 to 10,000	1 min^{-1}	20	Rotary	Immedi-ately	Setup	page 6-11
Pn503	2	Speed Coincidence Detection Signal Output Width	0 to 100	1 min^{-1}	10	Rotary	Immedi-ately	Setup	page 6-27
Pn506	2	Brake Reference-Servo OFF Delay Time	0 to 50	10 ms	0	All	Immedi-ately	Setup	page 5-36
Pn507	2	Brake Reference Out-put Speed Level	0 to 10,000	1 min^{-1}	100	Rotary	Immedi-ately	Setup	page 5-36
Pn508	2	Servo OFF-Brake Com-mand Waiting Time	10 to 100	10 ms	50	All	Immedi-ately	Setup	page 5-36
Pn509	2	Momentary Power Inter-ruption Hold Time	20 to 50,000	1 ms	20	All	Immedi-ately	Setup	page 6-13

n.□□□X	Gravity Compensation Selection
	0 Disable gravity compensation.
	1 Enable gravity compensation.

n.□□X□	Reserved parameter (Do not change.)

n.□X□□	Reserved parameter (Do not change.)

n.X□□□	Reserved parameter (Do not change.)

Continued on next page.

Continued from previous page.

Parameter No.	Size	Name	Setting Range	Setting Unit	Default Setting	Applicable Motors	When Enabled	Classi-fication	Refer-ence
Pn50A	2	Input Signal Selections 1	0000h to FFF2h	–	2100h	All	After restart	Setup	–

	Input Signal Allocation Mode		Reference
n.□□□X	0	Use the sequence input signal terminals with the default allocations.	page 6-5
	1	Change the sequence input signal allocations.	
	2	Reserved parameter (Do not change.)	

	/S-ON (Servo ON) Signal Allocation		Reference
n.□□X□	0	Active when CN1-40 input signal is ON (closed).	page 5-17
	1	Active when CN1-41 input signal is ON (closed).	
	2	Active when CN1-42 input signal is ON (closed).	
	3	Active when CN1-43 input signal is ON (closed).	
	4	Active when CN1-44 input signal is ON (closed).	
	5	Active when CN1-45 input signal is ON (closed).	
	6	Active when CN1-46 input signal is ON (closed).	
	7	The signal is always active.	
	8	The signal is always inactive.	
	9	Active when CN1-40 input signal is OFF (open).	
	A	Active when CN1-41 input signal is OFF (open).	
	B	Active when CN1-42 input signal is OFF (open).	
	C	Active when CN1-43 input signal is OFF (open).	
	D	Active when CN1-44 input signal is OFF (open).	
	E	Active when CN1-45 input signal is OFF (open).	
	F	Active when CN1-46 input signal is OFF (open).	

	/P-CON (Proportional Control) Signal Allocation		Reference
n.□X□□	0 to F	The allocations are the same as the /S-ON (Servo ON) signal allocations.	page 8-74

	P-OT (Forward Drive Prohibit) Signal Allocation		Reference
n.X□□□	0	Enable forward drive when CN1-40 input signal is ON (closed).	page 5-32
	1	Enable forward drive when CN1-41 input signal is ON (closed).	
	2	Enable forward drive when CN1-42 input signal is ON (closed).	
	3	Enable forward drive when CN1-43 input signal is ON (closed).	
	4	Enable forward drive when CN1-44 input signal is ON (closed).	
	5	Enable forward drive when CN1-45 input signal is ON (closed).	
	6	Enable forward drive when CN1-46 input signal is ON (closed).	
	7	Set the signal to always prohibit forward drive.	
	8	Set the signal to always enable forward drive.	
	9	Enable forward drive when CN1-40 input signal is OFF (open).	
	A	Enable forward drive when CN1-41 input signal is OFF (open).	
	B	Enable forward drive when CN1-42 input signal is OFF (open).	
	C	Enable forward drive when CN1-43 input signal is OFF (open).	
	D	Enable forward drive when CN1-44 input signal is OFF (open).	
	E	Enable forward drive when CN1-45 input signal is OFF (open).	
	F	Enable forward drive when CN1-46 input signal is OFF (open).	

Continued on next page.

Continued from previous page.

Parameter No.	Size	Name	Setting Range	Setting Unit	Default Setting	Applicable Motors	When Enabled	Classi-fication	Refer-ence
Pn50B	2	Input Signal Selections 2	0000h to FFFFh	–	6543h	All	After restart	Setup	–

	N-OT (Reverse Drive Prohibit) Signal Allocation		Reference
n.□□□X	0	Enable reverse drive when CN1-40 input signal is ON (closed).	page 5-32
	1	Enable reverse drive when CN1-41 input signal is ON (closed).	
	2	Enable reverse drive when CN1-42 input signal is ON (closed).	
	3	Enable reverse drive when CN1-43 input signal is ON (closed).	
	4	Enable reverse drive when CN1-44 input signal is ON (closed).	
	5	Enable reverse drive when CN1-45 input signal is ON (closed).	
	6	Enable reverse drive when CN1-46 input signal is ON (closed).	
	7	Set the signal to always prohibit reverse drive.	
	8	Set the signal to always enable reverse drive.	
	9	Enable reverse drive when CN1-40 input signal is OFF (open).	
	A	Enable reverse drive when CN1-41 input signal is OFF (open).	
	B	Enable reverse drive when CN1-42 input signal is OFF (open).	
	C	Enable reverse drive when CN1-43 input signal is OFF (open).	
	D	Enable reverse drive when CN1-44 input signal is OFF (open).	
	E	Enable reverse drive when CN1-45 input signal is OFF (open).	
	F	Enable reverse drive when CN1-46 input signal is OFF (open).	

	/ALM-RST (Alarm Reset) Signal Allocation		Reference
n.□□X□	0	Active on signal edge when CN1-40 input signal changes from OFF (open) to ON (closed).	page 12-41
	1	Active on signal edge when CN1-41 input signal changes from OFF (open) to ON (closed).	
	2	Active on signal edge when CN1-42 input signal changes from OFF (open) to ON (closed).	
	3	Active on signal edge when CN1-43 input signal changes from OFF (open) to ON (closed).	
	4	Active on signal edge when CN1-44 input signal changes from OFF (open) to ON (closed).	
	5	Active on signal edge when CN1-45 input signal changes from OFF (open) to ON (closed).	
	6	Active on signal edge when CN1-46 input signal changes from OFF (open) to ON (closed).	
	7	Reserved parameter (Do not change.)	
	8	The signal is always inactive.	
	9	Active on signal edge when CN1-40 input signal changes from ON (closed) to OFF (open).	
	A	Active on signal edge when CN1-41 input signal changes from ON (closed) to OFF (open).	
	B	Active on signal edge when CN1-42 input signal changes from ON (closed) to OFF (open).	
	C	Active on signal edge when CN1-43 input signal changes from ON (closed) to OFF (open).	
	D	Active on signal edge when CN1-44 input signal changes from ON (closed) to OFF (open).	
	E	Active on signal edge when CN1-45 input signal changes from ON (closed) to OFF (open).	
	F	Active on signal edge when CN1-46 input signal changes from ON (closed) to OFF (open).	

n.□X□□	/P-CL (Forward External Torque Limit Input) Signal Allocation		Reference
	0 to F	The allocations are the same as the /S-ON (Servo ON) signal allocations.	page 6-65

n.X□□□	/N-CL (Reverse External Torque Limit Input) Signal Allocation		Reference
	0 to F	The allocations are the same as the /S-ON (Servo ON) signal allocations.	page 6-65

Continued on next page.

Continued from previous page.

Parameter No.	Size	Name	Setting Range	Setting Unit	Default Setting	Applicable Motors	When Enabled	Classi-fication	Refer-ence
Pn50C	2	Input Signal Selections 3	0000h to FFFFh	–	8888h	All	After restart	Setup	–

	/SPD-D (Motor Direction) Signal Allocation		Reference
n.□□□X	0	Active when CN1-40 input signal is ON (closed).	page 6-55
	1	Active when CN1-41 input signal is ON (closed).	
	2	Active when CN1-42 input signal is ON (closed).	
	3	Active when CN1-43 input signal is ON (closed).	
	4	Active when CN1-44 input signal is ON (closed).	
	5	Active when CN1-45 input signal is ON (closed).	
	6	Active when CN1-46 input signal is ON (closed).	
	7	The signal is always active.	
	8	The signal is always inactive.	
	9	Active when CN1-40 input signal is OFF (open).	
	A	Active when CN1-41 input signal is OFF (open).	
	B	Active when CN1-42 input signal is OFF (open).	
	C	Active when CN1-43 input signal is OFF (open).	
	D	Active when CN1-44 input signal is OFF (open).	
	E	Active when CN1-45 input signal is OFF (open).	
	F	Active when CN1-46 input signal is OFF (open).	

	/SPD-A (Internal Set Speed Selection Input) Signal Allocation		Reference
n.□□X□	0 to F	The allocations are the same as the /SPD-D (Motor Direction) signal allocations.	page 6-55

	/SPD-B (Internal Set Speed Selection Input) Signal Allocation		Reference
n.□X□□	0 to F	The allocations are the same as the /SPD-D (Motor Direction) signal allocations.	page 6-55

	/C-SEL (Control Selection Input) Signal Allocation		Reference
n.X□□□	0 to F	The allocations are the same as the /SPD-D (Motor Direction) signal allocations.	page 6-61

Continued on next page.

Continued from previous page.

Parameter No.	Size	Name	Setting Range	Setting Unit	Default Setting	Applicable Motors	When Enabled	Classi-fication	Refer-ence
Pn50D	2	Input Signal Selections 4	0000h to FFFFh	–	8888h	–	After restart	Setup	–

	/ZCLAMP (Zero Clamping Input) Signal Allocation		Applicable Motors	Reference
n.□□□X	0	Active when CN1-40 input signal is ON (closed).	All	page 6-26
	1	Active when CN1-41 input signal is ON (closed).		
	2	Active when CN1-42 input signal is ON (closed).		
	3	Active when CN1-43 input signal is ON (closed).		
	4	Active when CN1-44 input signal is ON (closed).		
	5	Active when CN1-45 input signal is ON (closed).		
	6	Active when CN1-46 input signal is ON (closed).		
	7	The signal is always active.		
	8	The signal is always inactive.		
	9	Active when CN1-40 input signal is OFF (open).		
	A	Active when CN1-41 input signal is OFF (open).		
	B	Active when CN1-42 input signal is OFF (open).		
	C	Active when CN1-43 input signal is OFF (open).		
	D	Active when CN1-44 input signal is OFF (open).		
	E	Active when CN1-45 input signal is OFF (open).		
	F	Active when CN1-46 input signal is OFF (open).		

	/INHIBIT (Reference Pulse Inhibit Input) Signal Allocation		Applicable Motors	Reference
n.□□X□	0 to F	The allocations are the same as the /ZCLAMP (Zero Clamping Input) signal allocations.	All	page 6-39

	/G-SEL (Gain Selection Input) Signal Allocation		Applicable Motors	Reference
n.□X□□	0 to F	The allocations are the same as the /ZCLAMP (Zero Clamping Input) signal allocations.	All	page 8-67

	/P-DET (Polarity Detection Input) Signal Allocation		Applicable Motors	Reference
n.X□□□	0 to F	The allocations are the same as the /ZCLAMP (Zero Clamping Input) signal allocations.	Linear	page 5-29

Continued on next page.

Continued from previous page.

Parameter No.	Size	Name	Setting Range	Setting Unit	Default Setting	Applicable Motors	When Enabled	Classification	Reference
Pn50E	2	Output Signal Selections 1	0000h to 6666h	–	3211h	All	After restart	Setup	–

n.□□□X	/COIN (Positioning Completion Output) Signal Allocation		Reference
	0	Disabled (the above signal output is not used).	page 6-37
	1	Output the signal from the CN1-25 or CN1-26 output terminal.	
	2	Output the signal from the CN1-27 or CN1-28 output terminal.	
	3	Output the signal from the CN1-29 or CN1-30 output terminal.	
	4	Output the signal from the CN1-37 output terminal.	
	5	Output the signal from the CN1-38 output terminal.	
	6	Output the signal from the CN1-39 output terminal.	

n.□□X□	/V-CMP (Speed Coincidence Detection Output) Signal Allocation		Reference
	0 to 6	The allocations are the same as the /COIN (Positioning Completion) signal allocations.	page 6-27

n.□X□□	/TGON (Rotation Detection Output) Signal Allocation		Reference
	0 to 6	The allocations are the same as the /COIN (Positioning Completion) signal allocations.	page 6-11

n.X□□□	/S-RDY (Servo Ready) Signal Allocation		Reference
	0 to 6	The allocations are the same as the /COIN (Positioning Completion) signal allocations.	page 6-12

Pn50F	2	Output Signal Selections 2	0000h to 6666h	–	0000h	All	After restart	Setup	–

n.□□□X	/CLT (Torque Limit Detection Output) Signal Allocation		Reference
	0	Disabled (the above signal output is not used).	page 6-73
	1	Output the signal from the CN1-25 or CN1-26 output terminal.	
	2	Output the signal from the CN1-27 or CN1-28 output terminal.	
	3	Output the signal from the CN1-29 or CN1-30 output terminal.	
	4	Output the signal from the CN1-37 output terminal.	
	5	Output the signal from the CN1-38 output terminal.	
	6	Output the signal from the CN1-39 output terminal.	

n.□□X□	/VLT (Speed Limit Detection) Signal Allocation		Reference
	0 to 6	The allocations are the same as the /CLT (Torque Limit Detection Output) signal allocations.	page 6-45

n.□X□□	/BK (Brake Output) Signal Allocation		Reference
	0 to 6	The allocations are the same as the /CLT (Torque Limit Detection Output) signal allocations.	page 5-37

n.X□□□	/WARN (Warning Output) Signal Allocation		Reference
	0 to 6	The allocations are the same as the /CLT (Torque Limit Detection Output) signal allocations.	page 6-10

Continued on next page.

Continued from previous page.

Parameter No.	Size	Name	Setting Range	Setting Unit	Default Setting	Applicable Motors	When Enabled	Classi-fication	Refer-ence
Pn510	2	Output Signal Selec-tions 3	0000h to 0666h	–	0000h	All	After restart	Setup	–

	/NEAR (Near Output) Signal Allocation		Reference
n.□□□X	0	Disabled (the above signal output is not used).	page 6-38
	1	Output the signal from the CN1-25 or CN1-26 output terminal.	
	2	Output the signal from the CN1-27 or CN1-28 output terminal.	
	3	Output the signal from the CN1-29 or CN1-30 output terminal.	
	4	Output the signal from the CN1-37 output terminal.	
	5	Output the signal from the CN1-38 output terminal.	
	6	Output the signal from the CN1-39 output terminal.	

n.□□X□	Reserved parameter (Do not change.)	

	/PSELA (Reference Pulse Input Multiplication Switching Output) Signal Allocation		Reference
n.□X□□	0 to 6	The allocations are the same as the /NEAR (Near) signal alloca-tions.	page 6-34

n.X□□□	Reserved parameter (Do not change.)	

Pn512	2	Output Signal Inverse Settings	0000h to 1111h	–	0000h	All	After restart	Setup	page 6-8

	Output Signal Inversion for CN1-25 and CN1-26 Terminals	
n.□□□X	0	The signal is not inverted.
	1	The signal is inverted.

	Output Signal Inversion for CN1-27 and CN1-28 Terminals	
n.□□X□	0	The signal is not inverted.
	1	The signal is inverted.

	Output Signal Inversion for CN1-29 and CN1-30 Terminals	
n.□X□□	0	The signal is not inverted.
	1	The signal is inverted.

	Output Signal Inversion for CN1-37 Terminal	
n.X□□□	0	The signal is not inverted.
	1	The signal is inverted.

Pn513	2	Output Signal Inverse Settings 2	0000h to 0011h	–	0000h	All	After restart	Setup	page 6-8

	Output Signal Inversion for CN1-38 Terminal	
n.□□□X	0	The signal is not inverted.
	1	The signal is inverted.

	Output Signal Inversion for CN1-39 Terminal	
n.□□X□	0	The signal is not inverted.
	1	The signal is inverted.

n.□X□□	Reserved parameter (Do not change.)	

n.X□□□	Reserved parameter (Do not change.)	

Continued on next page.

Continued from previous page.

Parameter No.	Size	Name	Setting Range	Setting Unit	Default Setting	Applicable Motors	When Enabled	Classification	Reference
Pn514	2	Output Signal Selections 4	0000h to 0666h	–	0000h	All	After restart	Setup	–

n.□□□X	Reserved parameter (Do not change.)

n.□□X□	Reserved parameter (Do not change.)

	/PM (Preventative Maintenance Output) Signal Allocation		Reference
n.□X□□	0	Disabled (the above signal output is not used).	page 9-17
	1	Output the signal from the CN1-25 or CN1-26 output terminal.	
	2	Output the signal from the CN1-27 or CN1-28 output terminal.	
	3	Output the signal from the CN1-29 or CN1-30 output terminal.	
	4	Output the signal from the CN1-37 output terminal.	
	5	Output the signal from the CN1-38 output terminal.	
	6	Output the signal from the CN1-39 output terminal.	

n.X□□□	Reserved parameter (Do not change.)

Continued on next page.

Continued from previous page.

Parameter No.	Size	Name	Setting Range	Setting Unit	Default Setting	Applicable Motors	When Enabled	Classi-fication	Refer-ence
Pn515	2	Input Signal Selections 6	0000h to FFFFh	–	8888h	All	After restart	Setup	–

	SEN (Absolute Data Request Input) Signal Allocation		Reference
n.□□□X	0	Active when CN1-40 input signal is ON (closed).	page 6-77, page 6-90
	1	Active when CN1-41 input signal is ON (closed).	
	2	Active when CN1-42 input signal is ON (closed).	
	3	Active when CN1-43 input signal is ON (closed).	
	4	Active when CN1-44 input signal is ON (closed).	
	5	Active when CN1-45 input signal is ON (closed).	
	6	Active when CN1-46 input signal is ON (closed).	
	7	The signal is always active.	
	8	Enable when 5 V is input to CN1-4.	
	9	Active when CN1-40 input signal is OFF (open).	
	A	Active when CN1-41 input signal is OFF (open).	
	B	Active when CN1-42 input signal is OFF (open).	
	C	Active when CN1-43 input signal is OFF (open).	
	D	Active when CN1-44 input signal is OFF (open).	
	E	Active when CN1-45 input signal is OFF (open).	
	F	Active when CN1-46 input signal is OFF (open).	

	/PSEL (Reference Pulse Input Multiplication Switching Input) Signal Allocation		Reference
n.□□X□	0	Active when CN1-40 input signal is ON (closed).	page 6-34
	1	Active when CN1-41 input signal is ON (closed).	
	2	Active when CN1-42 input signal is ON (closed).	
	3	Active when CN1-43 input signal is ON (closed).	
	4	Active when CN1-44 input signal is ON (closed).	
	5	Active when CN1-45 input signal is ON (closed).	
	6	Active when CN1-46 input signal is ON (closed).	
	7	The signal is always enabled.	
	8	The signal is always inactive.	
	9	Active when CN1-40 input signal is OFF (open).	
	A	Active when CN1-41 input signal is OFF (open).	
	B	Active when CN1-42 input signal is OFF (open).	
	C	Active when CN1-43 input signal is OFF (open).	
	D	Active when CN1-44 input signal is OFF (open).	
	E	Active when CN1-45 input signal is OFF (open).	
	F	Active when CN1-46 input signal is OFF (open).	

n.□X□□	Reserved parameter (Do not change.)
n.X□□□	Reserved parameter (Do not change.)

Continued on next page.

Continued from previous page.

Parameter No.	Size	Name	Setting Range	Setting Unit	Default Setting	Applicable Motors	When Enabled	Classi-fication	Refer-ence
Pn516	2	Input Signal Selections 7	0000h to FFFFh	–	8888h	All	After restart	Setup	–

	FSTP (Forced Stop Input) Signal Allocation		Reference
n.□□□X	0	Enable drive when CN1-40 input signal is ON (closed).	page 6-107
	1	Enable drive when CN1-41 input signal is ON (closed).	
	2	Enable drive when CN1-42 input signal is ON (closed).	
	3	Enable drive when CN1-43 input signal is ON (closed).	
	4	Enable drive when CN1-44 input signal is ON (closed).	
	5	Enable drive when CN1-45 input signal is ON (closed).	
	6	Enable drive when CN1-46 input signal is ON (closed).	
	7	Set the signal to always prohibit drive (always force the motor to stop).	
	8	Set the signal to always enable drive (always disable forcing the motor to stop).	
	9	Enable drive when CN1-40 input signal is OFF (open).	
	A	Enable drive when CN1-41 input signal is OFF (open).	
	B	Enable drive when CN1-42 input signal is OFF (open).	
	C	Enable drive when CN1-43 input signal is OFF (open).	
	D	Enable drive when CN1-44 input signal is OFF (open).	
	E	Enable drive when CN1-45 input signal is OFF (open).	
	F	Enable drive when CN1-46 input signal is OFF (open).	
n.□□X□	Reserved parameter (Do not change.)		
n.□X□□	Reserved parameter (Do not change.)		
n.X□□□	Reserved parameter (Do not change.)		

Pn517	2	Output Signal Selec-tions 5	0000h to 0666h	–	0654h	All	After restart	Setup	page 6-8

	ALO1 (Alarm Code Output) Signal Allocation	
n.□□□X	0	Disabled (the above signal output is not used).
	1	Output the signal from the CN1-25 or CN1-26 output terminal.
	2	Output the signal from the CN1-27 or CN1-28 output terminal.
	3	Output the signal from the CN1-29 or CN1-30 output terminal.
	4	Output the signal from the CN1-37 output terminal.
	5	Output the signal from the CN1-38 output terminal.
	6	Output the signal from the CN1-39 output terminal.

	ALO2 (Alarm Code Output) Signal Allocation	
n.□□X□	0 to 6	The allocations are the same as the ALO1 (Alarm Code Output) signal alloca-tions.

	ALO3 (Alarm Code Output) Signal Allocation	
n.□X□□	0 to 6	The allocations are the same as the ALO1 (Alarm Code Output) signal alloca-tions.

n.X□□□	Reserved parameter (Do not change.)	

Pn518*2	–	Safety Module-Related Parameters	–	–	–	All	–	–	–
Pn51B	4	Motor-Load Position Deviation Overflow Detection Level	0 to 1,073,741,824	1 refer-ence unit	1000	Rotary	Immedi-ately	Setup	page 10-8

Continued on next page.

Continued from previous page.

Parameter No.	Size	Name	Setting Range	Setting Unit	Default Setting	Applicable Motors	When Enabled	Classification	Reference
Pn51E	2	Position Deviation Overflow Warning Level	10 to 100	1%	100	All	Immediately	Setup	page 8-9
Pn520	4	Position Deviation Overflow Alarm Level	1 to 1,073,741,823	1 reference unit	5242880	All	Immediately	Setup	page 8-8, page 8-85
Pn522	4	Positioning Completed Width	0 to 1,073,741,824	1 reference unit	7	All	Immediately	Setup	page 6-37
Pn524	4	Near Signal Width	1 to 1,073,741,824	1 reference unit	1073741824	All	Immediately	Setup	page 6-38
Pn526	4	Position Deviation Overflow Alarm Level at Servo ON	1 to 1,073,741,823	1 reference unit	5242880	All	Immediately	Setup	page 8-10
Pn528	2	Position Deviation Overflow Warning Level at Servo ON	10 to 100	1%	100	All	Immediately	Setup	page 8-10
Pn529	2	Speed Limit Level at Servo ON	0 to 10,000	1 min^{-1}	10000	Rotary	Immediately	Setup	page 8-10
Pn52A	2	Multiplier per Fully-closed Rotation	0 to 100	1%	20	Rotary	Immediately	Tuning	page 10-8
Pn52B	2	Overload Warning Level	1 to 100	1%	20	All	Immediately	Setup	page 5-44
Pn52C	2	Base Current Derating at Motor Overload Detection	10 to 100	1%	100	All	After restart	Setup	page 5-45
Pn52F	2	Monitor Display at Startup	0000h to 0FFFh	–	0FFFh	All	Immediately	Setup	page 13-4
Pn530	2	Program Jogging-Related Selections	0000h to 0005h	–	0000h	All	Immediately	Setup	page 7-20
Pn531	4	Program Jogging Travel Distance	1 to 1,073,741,824	1 reference unit	32768	All	Immediately	Setup	page 7-20
Pn533	2	Program Jogging Movement Speed	1 to 10,000	Rotary: 1 min^{-1} Direct Drive: 0.1 min^{-1}	500	Rotary	Immediately	Setup	page 7-20

n.□□□X	Program Jogging Operation Pattern	
	0	(Waiting time in Pn535 → Forward by travel distance in Pn531) × Number of movements in Pn536
	1	(Waiting time in Pn535 → Reverse by travel distance in Pn531) × Number of movements in Pn536
	2	(Waiting time in Pn535 → Forward by travel distance in Pn531) × Number of movements in Pn536 (Waiting time in Pn535 → Reverse by travel distance in Pn531) × Number of movements in Pn536
	3	(Waiting time in Pn535 → Reverse by travel distance in Pn531) × Number of movements in Pn536 (Waiting time in Pn535 → Forward by travel distance in Pn531) × Number of movements in Pn536
	4	(Waiting time in Pn535 → Forward by travel distance in Pn531 → Waiting time in Pn535 → Reverse by travel distance in Pn531) × Number of movements in Pn536
	5	(Waiting time in Pn535 → Reverse by travel distance in Pn531 → Waiting time in Pn535 → Forward by travel distance in Pn531) × Number of movements in Pn536
n.□□X□	Reserved parameter (Do not change.)	
n.□X□□	Reserved parameter (Do not change.)	
n.X□□□	Reserved parameter (Do not change.)	

Continued on next page.

Continued from previous page.

Parameter No.	Size	Name	Setting Range	Setting Unit	Default Setting	Applicable Motors	When Enabled	Classification	Reference
Pn534	2	Program Jogging Acceleration/Deceleration Time	2 to 10,000	1 ms	100	All	Immediately	Setup	page 7-20
Pn535	2	Program Jogging Waiting Time	0 to 10,000	1 ms	100	All	Immediately	Setup	page 7-20
Pn536	2	Program Jogging Number of Movements	0 to 1,000	1 time	1	All	Immediately	Setup	page 7-20
Pn550	2	Analog Monitor 1 Offset Voltage	-10,000 to 10,000	0.1 V	0	All	Immediately	Setup	page 9-12
Pn551	2	Analog Monitor 2 Offset Voltage	-10,000 to 10,000	0.1 V	0	All	Immediately	Setup	page 9-12
Pn552	2	Analog Monitor 1 Magnification	-10,000 to 10,000	× 0.01	100	All	Immediately	Setup	page 9-12
Pn553	2	Analog Monitor 2 Magnification	-10,000 to 10,000	× 0.01	100	All	Immediately	Setup	page 9-12
Pn55A	2	Power Consumption Monitor Unit Time	1 to 1,440	1 min	1	All	Immediately	Setup	–
Pn560	2	Residual Vibration Detection Width	1 to 3,000	0.1%	400	All	Immediately	Setup	page 8-56
Pn561	2	Overshoot Detection Level	0 to 100	1%	100	All	Immediately	Setup	page 8-32, page 8-40
Pn580	2	Zero Clamping Level	0 to 10,000	1 mm/s	10	Linear	Immediately	Setup	page 6-25
Pn581	2	Zero Speed Level	1 to 10,000	1 mm/s	20	Linear	Immediately	Setup	page 6-11
Pn582	2	Speed Coincidence Detection Signal Output Width	0 to 100	1 mm/s	10	Linear	Immediately	Setup	page 6-27
Pn583	2	Brake Reference Output Speed Level	0 to 10,000	1 mm/s	10	Linear	Immediately	Setup	page 5-36
Pn584	2	Speed Limit Level at Servo ON	0 to 10,000	1 mm/s	10000	Linear	Immediately	Setup	page 8-10
Pn585	2	Program Jogging Movement Speed	1 to 10,000	1 mm/s	50	Linear	Immediately	Setup	page 7-20
Pn586	2	Motor Running Cooling Ratio	0 to 100	1%/ Max. speed	0	Linear	Immediately	Setup	–
Pn600	2	Regenerative Resistor Capacity*3	Depends on model.*4	10 W	0	All	Immediately	Setup	page 5-58
Pn601	2	Dynamic Brake Resistor Allowable Energy Consumption	0 to 65,535	10 J	0	All	After restart	Setup	*5
Pn603	2	Regenerative Resistance	0 to 65,535	10 mΩ	0	All	Immediately	Setup	page 5-58
Pn604	2	Dynamic Brake Resistance	0 to 65,535	10 mΩ	0	All	After restart	Setup	*5
Pn61A	2	Overheat Protection Selections	0000h to 0003h	–	0000h	All	After restart	Setup	page 6-110

n.□□□X	Overheat Protection Selection	
	0	Disable overheat protection.
	1	Use overheat protection in the Yaskawa Linear Servomotor.*6
	2	Monitor a negative voltage input from a sensor attached to the machine and use overheat protection.
	3	Monitor a positive voltage input from a sensor attached to the machine and use overheat protection.

n.□□X□	Reserved parameter (Do not change.)
n.□X□□	Reserved parameter (Do not change.)
n.X□□□	Reserved parameter (Do not change.)

Continued on next page.

Continued from previous page.

Parameter No.	Size	Name	Setting Range	Setting Unit	Default Setting	Applicable Motors	When Enabled	Classi-fication	Refer-ence
Pn61B *7	2	Overheat Alarm Level	0 to 500	0.01 V	250	All	Immedi-ately	Setup	page 6-112
Pn61C *7	2	Overheat Warning Level	0 to 100	1%	100	All	Immedi-ately	Setup	page 6-112
Pn61D *7	2	Overheat Alarm Filter Time	0 to 65,535	1 s	0	All	Immedi-ately	Setup	page 6-112
Pn621 to Pn628*2	–	Safety Module-Related Parameters	–	–	–	All	–	–	–

*1. Set a percentage of the motor rated torque.

*2. These parameters are for SERVOPACKs with a Safety Module. Refer to the following manual for details.
Σ-V-Series/Σ-V-Series for Large-Capacity Models/Σ-7-Series User's Manual Safety Module (Manual No.: SIEP C720829 06)

*3. Normally set this parameter to 0. If you use an External Regenerative Resistor, set the capacity (W) of the External Regenerative Resistor.

*4. The upper limit is the maximum output capacity (W) of the SERVOPACK.

*5. These parameters are for SERVOPACKs with the dynamic brake option. Refer to the following manual for details.
Σ-7-Series AC Servo Drive Σ-7S/Σ-7W SERVOPACK with Dynamic Brake Hardware Option Specifications Product Manual (Manual No.: SIEP S800001 73)

*6. The SGLFW2 is the only Yaskawa Linear Servomotor that supports this function.

*7. Enabled only when Pn61A is set to n.□□□2 or n.□□□3.

14.2 Parameter Recording Table

Use the following table to record the settings of the parameters.

Parameter No.	Default Setting					Name	When Enabled
Pn000	0000h					Basic Function Selections 0	After restart
Pn001	0000h					Application Function Selections 1	After restart
Pn002	0000h					Application Function Selections 2	After restart
Pn006	0002h					Application Function Selections 6	Immediately
Pn007	0000h					Application Function Selections 7	Immediately
Pn008	0000h					Application Function Selections 8	After restart
Pn009	0010h					Application Function Selections 9	After restart
Pn00A	0001h					Application Function Selections A	After restart
Pn00B	0000h					Application Function Selections B	After restart
Pn00C	0000h					Application Function Selections C	After restart
Pn00D	0000h					Application Function Selections D	Immediately
Pn00F	0000h					Application Function Selections F	After restart
Pn010	0001h					Axis Address Selection for UART/USB Communications	After restart
Pn021	0000h					Reserved parameter	–
Pn022	0000h					Reserved parameter	–
Pn040	0000h					Σ-V Compatible Function Switch	After restart
Pn080	0000h					Application Function Selections 80	After restart
Pn081	0000h					Application Function Selections 81	After restart
Pn100	400					Speed Loop Gain	Immediately
Pn101	2000					Speed Loop Integral Time Constant	Immediately
Pn102	400					Position Loop Gain	Immediately
Pn103	100					Moment of Inertia Ratio	Immediately
Pn104	400					Second Speed Loop Gain	Immediately
Pn105	2000					Second Speed Loop Integral Time Constant	Immediately
Pn106	400					Second Position Loop Gain	Immediately
Pn109	0					Feedforward	Immediately
Pn10A	0					Feedforward Filter Time Constant	Immediately
Pn10B	0000h					Gain Application Selections	*
Pn10C	200					Mode Switching Level for Torque Reference	Immediately
Pn10D	0					Mode Switching Level for Speed Reference	Immediately

Continued on next page.

Continued from previous page.

Parameter No.	Default Setting					Name	When Enabled
Pn10E	0					Mode Switching Level for Acceleration	Immediately
Pn10F	0					Mode Switching Level for Position Deviation	Immediately
Pn11F	0					Position Integral Time Constant	Immediately
Pn121	100					Friction Compensation Gain	Immediately
Pn122	100					Second Friction Compensation Gain	Immediately
Pn123	0					Friction Compensation Coefficient	Immediately
Pn124	0					Friction Compensation Frequency Correction	Immediately
Pn125	100					Friction Compensation Gain Correction	Immediately
Pn131	0					Gain Switching Time 1	Immediately
Pn132	0					Gain Switching Time 2	Immediately
Pn135	0					Gain Switching Waiting Time 1	Immediately
Pn136	0					Gain Switching Waiting Time 2	Immediately
Pn139	0000h					Automatic Gain Switching Selections 1	Immediately
Pn13D	2000					Current Gain Level	Immediately
Pn140	0100h					Model Following Control-Related Selections	Immediately
Pn141	500					Model Following Control Gain	Immediately
Pn142	1000					Model Following Control Gain Correction	Immediately
Pn143	1000					Model Following Control Bias in the Forward Direction	Immediately
Pn144	1000					Model Following Control Bias in the Reverse Direction	Immediately
Pn145	500					Vibration Suppression 1 Frequency A	Immediately
Pn146	700					Vibration Suppression 1 Frequency B	Immediately
Pn147	1000					Model Following Control Speed Feedforward Compensation	Immediately
Pn148	500					Second Model Following Control Gain	Immediately
Pn149	1000					Second Model Following Control Gain Correction	Immediately
Pn14A	800					Vibration Suppression 2 Frequency	Immediately
Pn14B	100					Vibration Suppression 2 Correction	Immediately
Pn14F	0021h					Control-Related Selections	After restart
Pn160	0010h					Anti-Resonance Control-Related Selections	Immediately
Pn161	1000					Anti-Resonance Frequency	Immediately

Continued on next page.

Continued from previous page.

Parameter No.	Default Setting					Name	When Enabled
Pn162	100					Anti-Resonance Gain Correction	Immediately
Pn163	0					Anti-Resonance Damping Gain	Immediately
Pn164	0					Anti-Resonance Filter Time Constant 1 Correction	Immediately
Pn165	0					Anti-Resonance Filter Time Constant 2 Correction	Immediately
Pn166	0					Anti-Resonance Damping Gain 2	Immediately
Pn170	1401h					Tuning-less Function-Related Selections	*
Pn181	0					Mode Switching Level for Speed Reference	Immediately
Pn182	0					Mode Switching Level for Acceleration	Immediately
Pn200	0000h					Position Control Reference Form Selections	After restart
Pn205	65535					Multiturn Limit	After restart
Pn207	0000h					Position Control Function Selections	After restart
Pn20A	32768					Number of External Encoder Scale Pitches	After restart
Pn20E	64					Electronic Gear Ratio (Numerator)	After restart
Pn210	1					Electronic Gear Ratio (Denominator)	After restart
Pn212	2048					Number of Encoder Output Pulses	After restart
Pn216	0					Position Reference Acceleration/Deceleration Time Constant	Immediately after the motor stops
Pn217	0					Average Position Reference Movement Time	Immediately after the motor stops
Pn218	1					Reference Pulse Input Multiplier	Immediately
Pn22A	0000h					Fully-closed Control Selections	After restart
Pn281	20					Encoder Output Resolution	After restart
Pn282	0					Linear Encoder Scale Pitch	After restart
Pn300	600					Speed Reference Input Gain	Immediately
Pn301	100					Internal Set Speed 1	Immediately
Pn302	200					Internal Set Speed 2	Immediately
Pn303	300					Internal Set Speed 3	Immediately
Pn304	500					Jogging Speed	Immediately
Pn305	0					Soft Start Acceleration Time	Immediately
Pn306	0					Soft Start Deceleration Time	Immediately
Pn307	40					Speed Reference Filter Time Constant	Immediately
Pn308	0					Speed Feedback Filter Time Constant	Immediately

Continued on next page.

Continued from previous page.

Parameter No.	Default Setting					Name	When Enabled
Pn30A	0					Deceleration Time for Servo OFF and Forced Stops	Immediately
Pn30C	0					Speed Feedforward Average Movement Time	Immediately
Pn310	0000h					Vibration Detection Selections	Immediately
Pn311	100					Vibration Detection Sensitivity	Immediately
Pn312	50					Vibration Detection Level	Immediately
Pn316	10000					Maximum Motor Speed	After restart
Pn324	300					Moment of Inertia Calculation Starting Level	Immediately
Pn380	10					Internal Set Speed 1	Immediately
Pn381	20					Internal Set Speed 2	Immediately
Pn382	30					Internal Set Speed 3	Immediately
Pn383	50					Jogging Speed	Immediately
Pn384	10					Vibration Detection Level	Immediately
Pn385	50					Maximum Motor Speed	After restart
Pn400	30					Torque Reference Input Gain	Immediately
Pn401	100					First Stage First Torque Reference Filter Time Constant	Immediately
Pn402	800					Forward Torque Limit	Immediately
Pn403	800					Reverse Torque Limit	Immediately
Pn404	100					Forward External Torque Limit	Immediately
Pn405	100					Reverse External Torque Limit	Immediately
Pn406	800					Emergency Stop Torque	Immediately
Pn407	10000					Speed Limit during Torque Control	Immediately
Pn408	0000h					Torque-Related Function Selections	*
Pn409	5000					First Stage Notch Filter Frequency	Immediately
Pn40A	70					First Stage Notch Filter Q Value	Immediately
Pn40B	0					First Stage Notch Filter Depth	Immediately
Pn40C	5000					Second Stage Notch Filter Frequency	Immediately
Pn40D	70					Second Stage Notch Filter Q Value	Immediately
Pn40E	0					Second Stage Notch Filter Depth	Immediately
Pn40F	5000					Second Stage Second Torque Reference Filter Frequency	Immediately
Pn410	50					Second Stage Second Torque Reference Filter Q Value	Immediately
Pn412	100					First Stage Second Torque Reference Filter Time Constant	Immediately

Continued on next page.

Continued from previous page.

Parameter No.	Default Setting					Name	When Enabled
Pn415	0					T-REF Filter Time Constant	Immediately
Pn416	0000h					Torque-Related Function Selections 2	Immediately
Pn417	5000					Third Stage Notch Filter Frequency	Immediately
Pn418	70					Third Stage Notch Filter Q Value	Immediately
Pn419	0					Third Stage Notch Filter Depth	Immediately
Pn41A	5000					Fourth Stage Notch Filter Frequency	Immediately
Pn41B	70					Fourth Stage Notch Filter Q Value	Immediately
Pn41C	0					Fourth Stage Notch Filter Depth	Immediately
Pn41D	5000					Fifth Stage Notch Filter Frequency	Immediately
Pn41E	70					Fifth Stage Notch Filter Q Value	Immediately
Pn41F	0					Fifth Stage Notch Filter Depth	Immediately
Pn423	0000h					Speed Ripple Compensation Selections	*
Pn424	50					Torque Limit at Main Circuit Voltage Drop	Immediately
Pn425	100					Release Time for Torque Limit at Main Circuit Voltage Drop	Immediately
Pn426	0					Torque Feedforward Average Movement Time	Immediately
Pn427	0					Speed Ripple Compensation Enable Speed	Immediately
Pn456	15					Sweep Torque Reference Amplitude	Immediately
Pn460	0101h					Notch Filter Adjustment Selections 1	Immediately
Pn475	0000h					Gravity Compensation-Related Selections	After restart
Pn476	0					Gravity Compensation Torque	Immediately
Pn480	10000					Speed Limit during Force Control	Immediately
Pn481	400					Polarity Detection Speed Loop Gain	Immediately
Pn482	3000					Polarity Detection Speed Loop Integral Time Constant	Immediately
Pn483	30					Forward Force Limit	Immediately
Pn484	30					Reverse Force Limit	Immediately
Pn485	20					Polarity Detection Reference Speed	Immediately
Pn486	25					Polarity Detection Reference Acceleration/Deceleration Time	Immediately
Pn487	0					Polarity Detection Constant Speed Time	Immediately

Continued on next page.

Continued from previous page.

Parameter No.	Default Setting					Name	When Enabled
Pn488	100					Polarity Detection Reference Waiting Time	Immediately
Pn48E	10					Polarity Detection Range	Immediately
Pn490	100					Polarity Detection Load Level	Immediately
Pn495	100					Polarity Detection Confirmation Force Reference	Immediately
Pn498	10					Polarity Detection Allowable Error Range	Immediately
Pn49F	0					Speed Ripple Compensation Enable Speed	Immediately
Pn501	10					Zero Clamping Level	Immediately
Pn502	20					Rotation Detection Level	Immediately
Pn503	10					Speed Coincidence Detection Signal Output Width	Immediately
Pn506	0					Brake Reference-Servo OFF Delay Time	Immediately
Pn507	100					Brake Reference Output Speed Level	Immediately
Pn508	50					Servo OFF-Brake Command Waiting Time	Immediately
Pn509	20					Momentary Power Interruption Hold Time	Immediately
Pn50A	2100h					Input Signal Selections 1	After restart
Pn50B	6543h					Input Signal Selections 2	After restart
Pn50C	8888h					Input Signal Selections 3	After restart
Pn50D	8888h					Input Signal Selections 4	After restart
Pn50E	3211h					Output Signal Selections 1	After restart
Pn50F	0000h					Output Signal Selections 2	After restart
Pn510	0000h					Output Signal Selections 3	After restart
Pn512	0000h					Output Signal Inverse Settings	After restart
Pn513	0000h					Output Signal Inverse Settings 2	After restart
Pn514	0000h					Output Signal Selections 4	After restart
Pn515	8888h					Input Signal Selections 6	After restart
Pn516	8888h					Input Signal Selections 7	After restart
Pn517	0654h					Output Signal Selections 5	After restart
Pn51B	1000					Motor-Load Position Deviation Overflow Detection Level	Immediately
Pn51E	100					Position Deviation Overflow Warning Level	Immediately
Pn520	5242880					Position Deviation Overflow Alarm Level	Immediately
Pn522	7					Positioning Completed Width	Immediately
Pn524	1073741824					Near Signal Width	Immediately
Pn526	5242880					Position Deviation Overflow Alarm Level at Servo ON	Immediately
Pn528	100					Position Deviation Overflow Warning Level at Servo ON	Immediately

Continued on next page.

Continued from previous page.

Parameter No.	Default Setting					Name	When Enabled
Pn529	10000					Speed Limit Level at Servo ON	Immediately
Pn52A	20					Multiplier per Fully-closed Rotation	Immediately
Pn52B	20					Overload Warning Level	Immediately
Pn52C	100					Base Current Derating at Motor Overload Detection	After restart
Pn52F	0FFFh					Monitor Display at Startup	Immediately
Pn530	0000h					Program Jogging-Related Selections	Immediately
Pn531	32768					Program Jogging Travel Distance	Immediately
Pn533	500					Program Jogging Movement Speed	Immediately
Pn534	100					Program Jogging Acceleration/Deceleration Time	Immediately
Pn535	100					Program Jogging Waiting Time	Immediately
Pn536	1					Program Jogging Number of Movements	Immediately
Pn550	0					Analog Monitor 1 Offset Voltage	Immediately
Pn551	0					Analog Monitor 2 Offset Voltage	Immediately
Pn552	100					Analog Monitor 1 Magnification	Immediately
Pn553	100					Analog Monitor 2 Magnification	Immediately
Pn55A	1					Power Consumption Monitor Unit Time	Immediately
Pn560	400					Residual Vibration Detection Width	Immediately
Pn561	100					Overshoot Detection Level	Immediately
Pn580	10					Zero Clamping Level	Immediately
Pn581	20					Zero Speed Level	Immediately
Pn582	10					Speed Coincidence Detection Signal Output Width	Immediately
Pn583	10					Brake Reference Output Speed Level	Immediately
Pn584	10000					Speed Limit Level at Servo ON	Immediately
Pn585	50					Program Jogging Movement Speed	Immediately
Pn586	0					Motor Running Cooling Ratio	Immediately
Pn600	0					Regenerative Resistor Capacity	Immediately
Pn601	0					Dynamic Brake Resistor Allowable Energy Consumption	After restart
Pn603	0					Regenerative Resistance	Immediately
Pn604	0					Dynamic Brake Resistance	After restart
Pn61A	0000h					Overheat Protection Selections	After restart
Pn61B	250					Overheat Alarm Level	Immediately

Continued on next page.

Continued from previous page.

Parameter No.	Default Setting					Name	When Enabled
Pn61C	100					Overheat Warning Level	Immediately
Pn61D	0					Overheat Alarm Filter Time	Immediately

* The enable timing depends on the digit that is changed. Refer to the following section for details.
☞ *14.1 List of Parameters* on page 14-2

Appendices

15

The appendix provides host controller connection examples, and tables of corresponding SERVOPACK and SigmaWin+ function names.

15.1 Examples of Connections to Host Controllers . . 15-2

15.1.1 Example of Connections to MP2000/MP3000-Series SVA-01 Motion Module 15-2
15.1.2 Example of Connections to Yokogawa Electric's F3YP2□-0P Positioning Module for Position Control 15-3
15.1.3 Example of Connections to Yokogawa Electric's F3NC3□-0N Positioning Module for Position Control 15-4
15.1.4 Example of Connections to an OMRON Position Control Unit 15-5
15.1.5 Example of Connection to Mitsubishi's QD75D□ Positioning Module for Position Control 15-6

15.2 Corresponding SERVOPACK and SigmaWin+ Function Names . . 15-7

15.2.1 Corresponding SERVOPACK Utility Function Names 15-7
15.2.2 Corresponding SERVOPACK Monitor Display Function Names 15-9

15.1 Examples of Connections to Host Controllers

This section provides examples of connections to host controllers.

15.1.1 Example of Connections to MP2000/MP3000-Series SVA-01 Motion Module

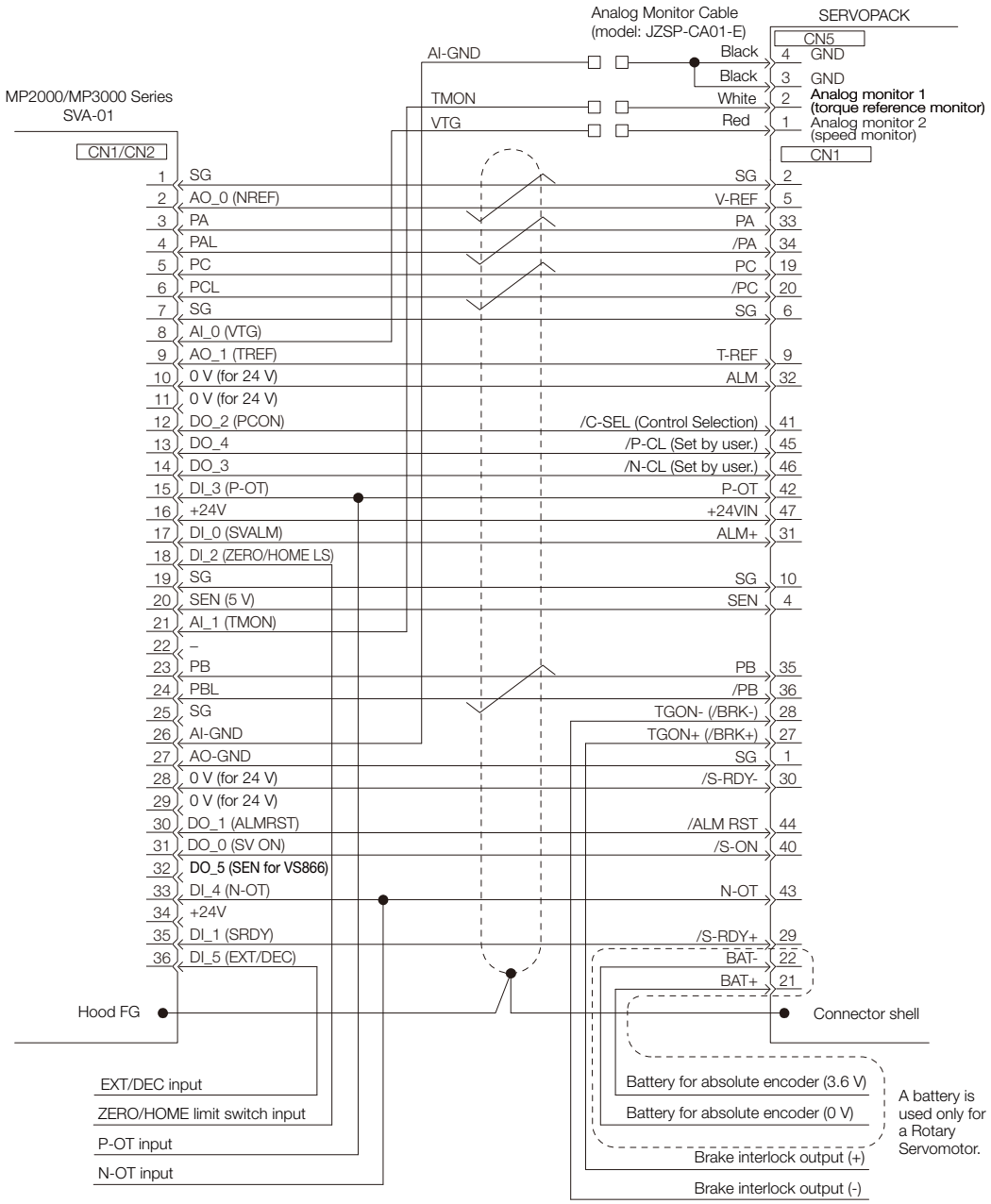

Note: 1. Cables to connect the SERVOPACK to the MP2000/MP3000 are available from Yaskawa. For details, refer to the manual for the Machine Controller.
2. Only signals that are applicable to the MP2000/MP3000-Series SVA-01 Motion Module and the SERVOPACK are shown in the diagram.
3. The main circuit power supply for the SERVOPACK in this connection example is three-phase 200 VAC.
4. Incorrect wiring may damage the Machine Controller or SERVOPACK. Wire all connections carefully.
5. Do not wire any unused signal lines (i.e., leave them open).
6. The above wiring diagram shows the connections for only one axis. If you will use other axes, make connections to the SERVOPACK in the same way.
7. All normally closed input terminals that are not used at the Machine Controller's I/O connector section must be connected at the connector.
8. Set the parameters so that the servo can be turned ON and OFF with the /S-ON (Servo ON) signal.

9. The SERVOPACK provides safety functions to protect people from the hazardous operation of the moving parts of the machine. In order to use the safety functions, the required circuits must be configured for CN8. If the safety functions will not be used, leave the enclosed Safety Jumper Connector connected to the SERVOPACK (CN8). Refer to the following chapter for details.
   ☞ *Chapter 11 Safety Functions*

15.1.2 Example of Connections to Yokogawa Electric's F3YP2□-0P Positioning Module for Position Control

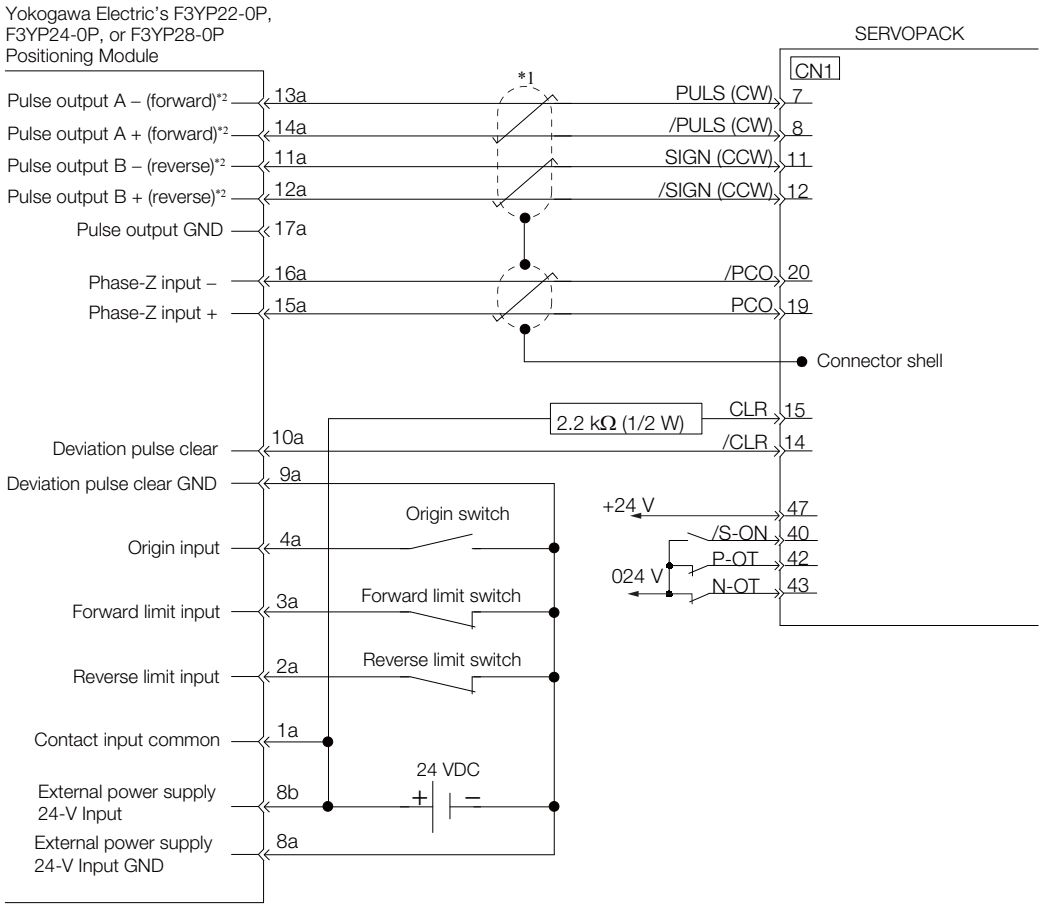

*1. Indicates shielded twisted-pair cable.
*2. The pulse output from Yokogawa Electric's F3YP2□-0P Positioning Module uses negative logic, so the positive and negative connections are reversed.

Note: 1. Only signals that are applicable to the SERVOPACK and Yokogawa Electric's F3YP2□-0P Positioning Module are shown in the diagram.
2. Incorrect wiring may damage the Positioning Module or SERVOPACK. Wire all connections carefully.
3. Do not wire any unused signal lines (i.e., leave them open).
4. The above wiring diagram shows the connections for only one axis. If you will use other axes, performing wiring to the SERVOPACK in the same way.

15.1.3 Example of Connections to Yokogawa Electric's F3NC3□-0N Positioning Module for Position Control

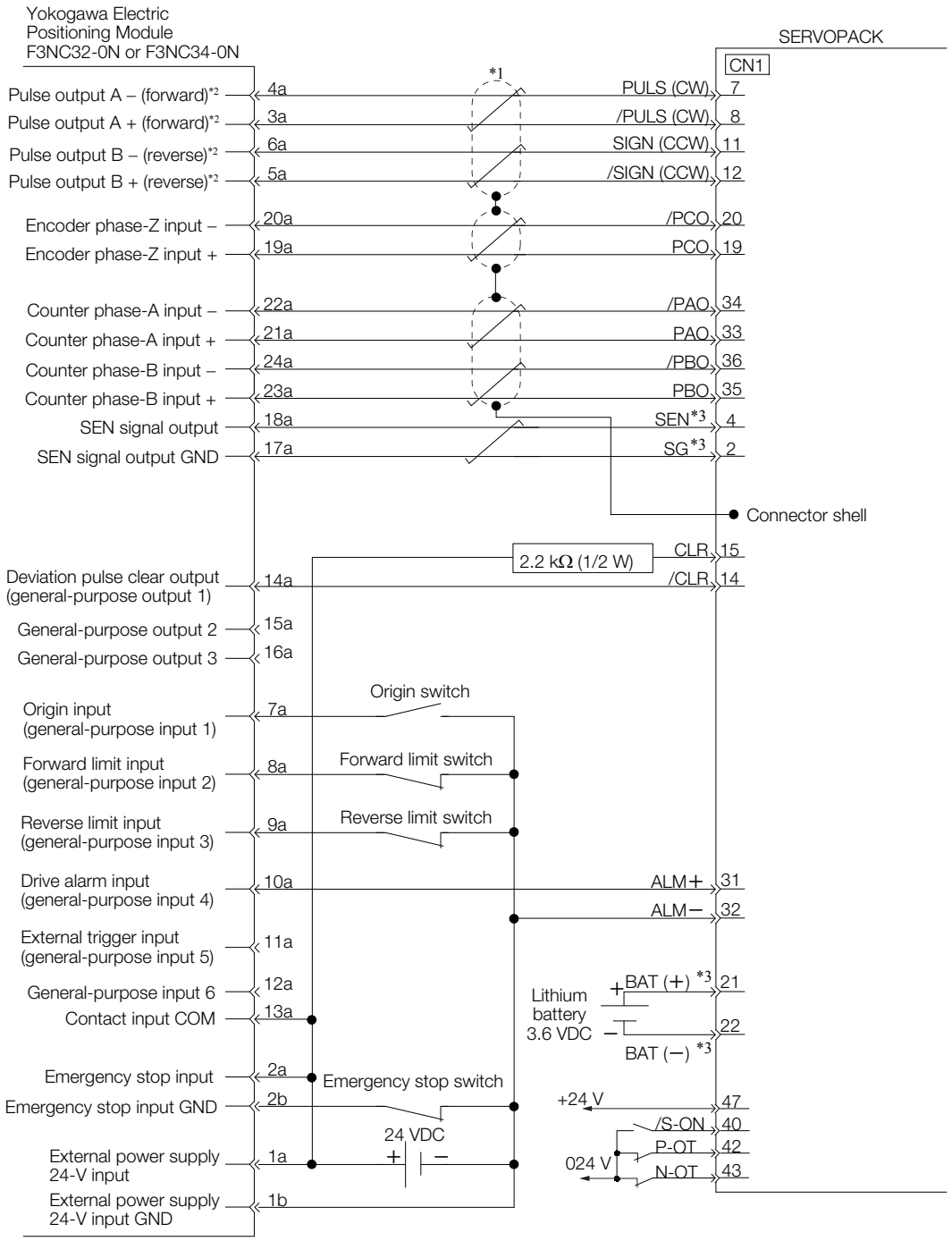

*1. Indicates shielded twisted-pair cable.

*2. The pulse output from Yokogawa Electric's F3NC3□-0N Positioning Module uses negative logic, so the positive and negative connections are reversed.

*3. Connect these when using an absolute encoder.

Note: 1. Only signals that are applicable to the SERVOPACK and Yokogawa Electric's F3NC3□-0N Positioning Module are shown in the diagram.
2. Incorrect wiring may damage the Positioning Module or SERVOPACK. Wire all connections carefully.
3. Do not wire any unused signal lines (i.e., leave them open).
4. The above wiring diagram shows the connections for only one axis. If you will use other axes, performing wiring to the SERVOPACK in the same way.

15.1.4 Example of Connections to an OMRON Position Control Unit

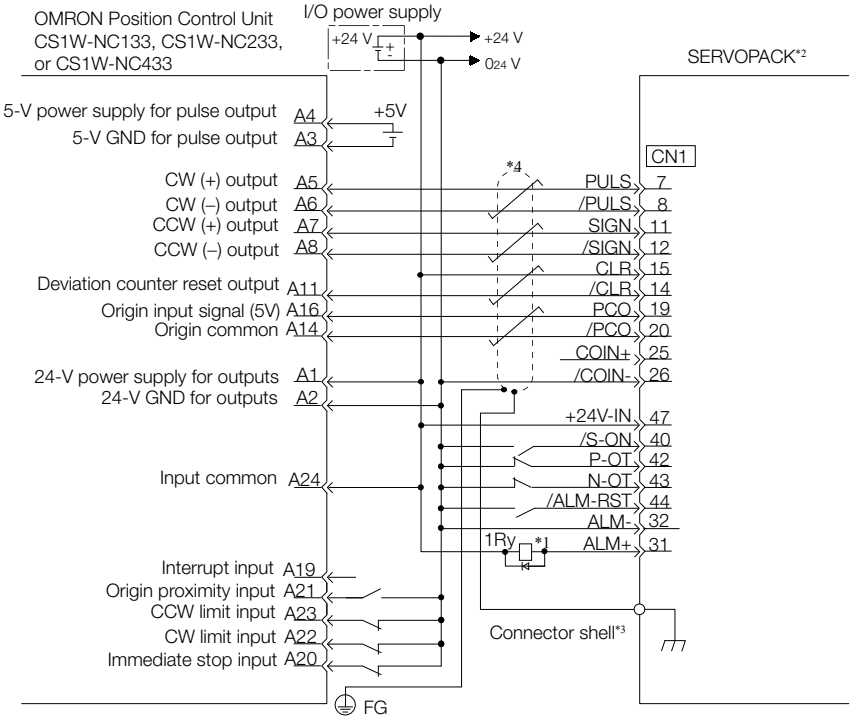

*1. The ALM (Servo Alarm) signal is output for approximately five seconds when the power supply is turned ON. Take this into consideration when designing the power ON sequence. Also, use the ALM signal to actuate the alarm detection relay (1Ry) to stop the main circuit power supply to the SERVOPACK.

*2. Set Pn200 to n.□□□1 (CW and CCW pulse trains with positive logic).

*3. Connect the shielded wire to the connector shell.

*4. represents a shielded twisted-pair cable.

Note: 1. Only the signals that are applicable to the SERVOPACK and the OMRON Position Control Unit are shown in the diagram.
2. The main circuit power supply for the SERVOPACK in this connection example is three-phase 200 VAC.
3. Incorrect wiring may damage the Position Control Unit or SERVOPACK. Wire all connections carefully.
4. Do not wire any unused signal lines (i.e., leave them open).
5. The above wiring diagram shows the connections for only the X axis. If you will use other axes, make connections to the SERVOPACK in the same way.
6. All normally closed input terminals that are not used at the Position Control Unit's I/O connector section must be connected at the connector.
7. Set the parameters so that the servo can be turned ON and OFF with the /S-ON (Servo ON) signal.
8. The SERVOPACK provides safety functions to protect people from the hazardous operation of the moving parts of the machine. In order to use the safety functions, the required circuits must be configured for CN8. If the safety functions will not be used, leave the enclosed Safety Jumper Connector connected to the SERVOPACK (CN8). Refer to the following chapter for details.
☞ *Chapter 11 Safety Functions*

15.1.5 Example of Connection to Mitsubishi's QD75D□ Positioning Module for Position Control

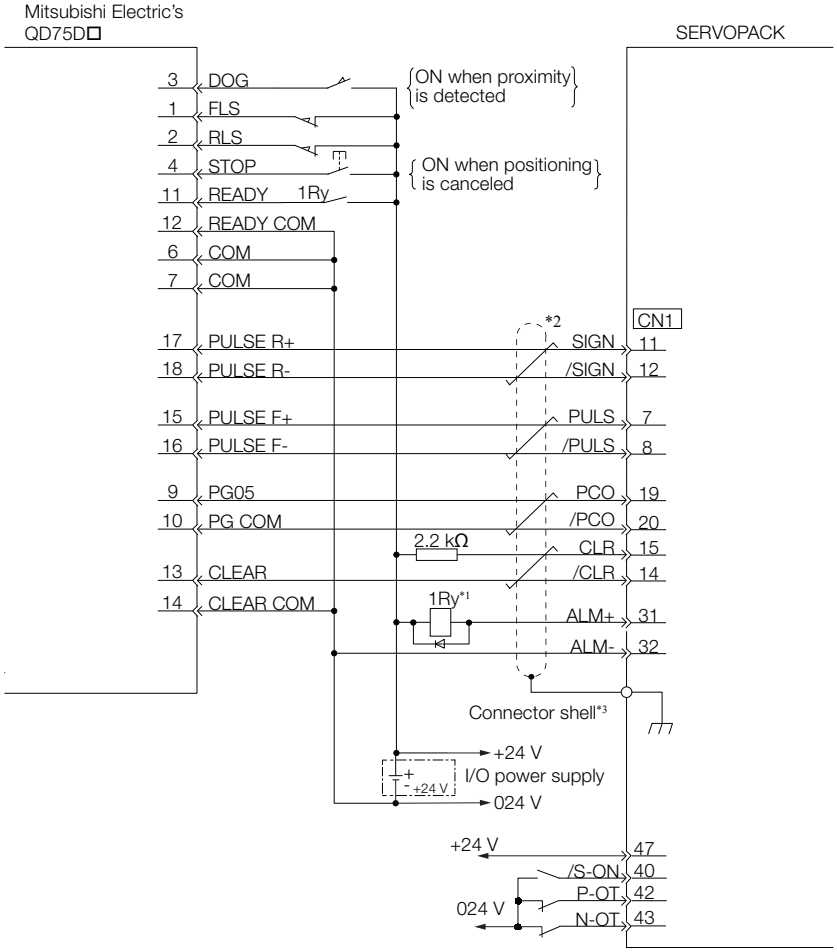

*1. The ALM (Servo Alarm) signal is output for up to five seconds when the power supply is turned ON. Take this into consideration when designing the power ON sequence. Also, use the ALM signal to actuate the alarm detection relay (1Ry) to stop the main circuit power supply to the SERVOPACK.

*2. represents a shielded twisted-pair cable.

*3. Connect the shielded wire to the connector shell.

Note: 1. Only the signals that are applicable to the SERVOPACK and Mitsubishi Electric's QD75D□ Positioning Module are shown in the diagram.
2. The main circuit power supply for the SERVOPACK in this connection example is three-phase 200 VAC.
3. Incorrect wiring may damage the Positioning Module or SERVOPACK. Wire all connections carefully.
4. Do not wire any unused signal lines (i.e., leave them open).
5. The above wiring diagram shows the connections for only one axis. If you will use other axes, make connections to the SERVOPACK in the same way.
6. All normally closed input terminals that are not used at the Positioning Module's I/O connector section must be connected at the connector.
7. Set the parameters so that the servo can be turned ON and OFF with the /S-ON (Servo ON) signal.
8. The SERVOPACK provides safety functions to protect people from the hazardous operation of the moving parts of the machine. In order to use the safety functions, the required circuits must be configured for CN8. If the safety functions will not be used, leave the enclosed Safety Jumper Connector connected to the SERVOPACK (CN8). Refer to the following chapter for details.
☞ *Chapter 11 Safety Functions*

15.2 Corresponding SERVOPACK and SigmaWin+ Function Names

This section gives the names and numbers of the utility functions and monitor display functions used by the SERVOPACKs and the names used by the SigmaWin+.

15.2.1 Corresponding SERVOPACK Utility Function Names

SigmaWin+		SERVOPACK	
Button in Menu Dialog Box	Function Name	Fn No.	Function Name
Basic Functions	Initialize	Fn005	Initializing Parameters
	Software Reset	Fn030	Software Reset
	Setup Wizard	–	–
	I/O Signal Allocation	–	–
	Product Information	Fn011	Display Servomotor Model
		Fn012	Display Software Version
		Fn01E	Display SERVOPACK and Servomotor IDs
		Fn01F	Display Servomotor ID from Feedback Option Module
Encoder Setting	Reset Absolute Encoder	Fn008	Reset Absolute Encoder
	Multi-turn Limit Setup	Fn013	Multiturn Limit Setting after Multiturn Limit Disagreement Alarm
	Search Origin	Fn003	Origin Search
	Zero Point Position Setting	Fn020	Set Absolute Linear Encoder Origin
	Polarity Detection	Fn080	Polarity Detection
	Motor Parameter Scale Write	–	–
Trouble-shooting	Display Alarm	Fn000	Display Alarm History
		Fn006	Clear Alarm History
		Fn014	Reset Option Module Configuration Error
	Alarm Trace	–	–
	Reset Motor Type Alarm	Fn021	Reset Motor Type Alarm
Operation	Jog	Fn002	Jog
	Program JOG Operation	Fn004	Jog Program
Monitor	Trace	–	–
	Real Time Trace	–	–
	Monitor	–	–
	Life Monitor	–	–

Continued on next page.

Continued from previous page.

SigmaWin+		SERVOPACK	
Button in Menu Dialog Box	Function Name	Fn No.	Function Name
Tuning	Tuning - Autotuning without Host Reference	Fn201	Advanced Autotuning without Reference
	Tuning - Autotuning with Host Reference	Fn202	Advanced Autotuning with Reference
	Tuning - Custom Tuning	Fn203	One-Parameter Tuning
	Tuning - Custom Tuning - Adjust Anti-resonance Control	Fn204	Adjust Anti-resonance Control
	Tuning - Custom Tuning - Vibration Suppression	Fn205	Vibration Suppression
	System Tuning	–	–
	Response Level Setting	Fn200	Tuning-less Level Setting
	Edit Online Parameters	–	–
Diagnostic	Mechanical Analysis	–	–
	Easy FFT	Fn206	Easy FFT
	Ripple Compensation	–	–
	Online Vibration Monitor	–	–
Others	Adjust the Speed and Torque Reference Offset	Fn009	Autotune Analog (Speed/ Torque) Reference Offset
		Fn00A	Manually Adjust Speed Reference Offset
		Fn00B	Manually Adjust Torque Reference Offset
	Adjust the Analog Monitor Output	Fn00C	Adjust Analog Monitor Output Offset
		Fn00D	Adjust Analog Monitor Output Gain
	Adjust the Motor Current Detection Offsets	Fn00E	Autotune Motor Current Detection Signal Offset
		Fn00F	Manually Adjust Motor Current Detection Signal Offset
	Initialize Vibration Detection Level	Fn01B	Initialize Vibration Detection Level
	Parameter Converter	–	–
	SERVOPACK Axis Name Setting	–	–
	Write Prohibited Setting	Fn010	Write Prohibition Setting
	Motor Parameter SERVOPACK Write	–	–

15.2.2 Corresponding SERVOPACK Monitor Display Function Names

SigmaWin+		SERVOPACK	
Button in Menu Dialog Box	Name [Unit]	Un No.	Name [Unit]
Motion Monitor	Motor Speed [min^{-1}]	Un000	Motor Speed [min^{-1}]
	Speed Reference [min^{-1}]	Un001	Speed Reference [min^{-1}]
	Torque Reference [%]	Un002	Torque Reference [%] (percentage of rated torque)
	• Rotary Servomotors: Rotational Angle 1 [encoder pulses] (number of encoder pulses from origin within one encoder rotation) • Linear Servomotors: Electrical Angle 1 [linear encoder pulses] (linear encoder pulses from the polarity origin)	Un003	• Rotary Servomotors: Rotational Angle 1 [encoder pulses] (number of encoder pulses from origin within one encoder rotation displayed in decimal) • Linear Servomotors: Electrical Angle 1 [linear encoder pulses] (linear encoder pulses from the polarity origin displayed in decimal)
	• Rotary Servomotors: Rotational Angle 2 [deg] (electrical angle from origin within one encoder rotation) • Linear Servomotors: Electrical Angle 2 [deg] (electrical angle from polarity origin)	Un004	• Rotary Servomotors: Rotational Angle 2 [deg] (electrical angle from polarity origin) • Linear Servomotors: Electrical Angle 2 [deg] (electrical angle from polarity origin)
	Input Reference Pulse Speed [min^{-1}]	Un007	Input Reference Pulse Speed [min^{-1}] (displayed only during position control)
	Position Deviation [reference units]	Un008	Position Error Amount [reference units] (displayed only during position control)
	Accumulated Load Ratio [%]	Un009	Accumulated Load Ratio [%] (percentage of rated torque: effective torque in cycles of 10 seconds)
	Regenerative Load Ratio [%]	Un00A	Regenerative Load Ratio [%] (percentage of processable regenerative power: regenerative power consumption in cycles of 10 seconds)
	Dynamic Brake Resistor Power Consumption [%]	Un00B	Power Consumed by DB Resistance [%] (percentage of processable power at DB activation: displayed in cycles of 10 seconds)
	Input Reference Pulse Counter [reference units]	Un00C	Input Reference Pulse Counter [reference units]
	Feedback Pulse Counter [encoder pulses]	Un00D	Feedback Pulse Counter [encoder pulses]
	Fully-closed Loop Feedback Pulse Counter [external encoder resolution]	Un00E	Fully-closed Loop Feedback Pulse Counter [external encoder resolution]
	Upper Limit Setting of Motor Maximum Speed/Upper Limit Setting of Encoder Output Resolution	Un010*1	Upper Limit Setting of Motor Maximum Speed/ Upper Limit Setting of Encoder Output Resolution
	Total Operation Time [100 ms]	Un012	Total Operation Time [100 ms]
	Feedback Pulse Counter [reference units]	Un013	Feedback Pulse Counter [reference units]
	Overheat Protection Input [0.01 V]	Un02F	Overheat Protection Input [0.01 V]
	Power Consumption [W]	Un032	Power Consumption [W]
	Consumed Power [0.001 Wh]	Un033	Consumed Power [0.001 Wh]

Continued on next page.

Continued from previous page.

SigmaWin+		SERVOPACK	
Button in Menu Dialog Box	Name [Unit]	Un No.	Name [Unit]
Motion Monitor	Cumulative Power Consumption [Wh]	Un034	Cumulative Power Consumption [Wh]
	Absolute Encoder Multiturn Data	Un040	Absolute Encoder Multiturn Data
	Position within One Rotation of Absolute Encoder [encoder pulses]	Un041	Position within One Rotation of Absolute Encoder [encoder pulses]
	Lower Bits of Absolute Encoder Position [encoder pulses]	Un042	Lower Bits of Absolute Encoder Position [encoder pulses]
	Upper Bits of Absolute Encoder Position [encoder pulses]	Un043	Upper Bits of Absolute Encoder Position [encoder pulses]
Status Monitor	Polarity Sensor Signal Monitor	Un011	Polarity Sensor Signal Monitor
	Active Gain Monitor	Un014	Effective Gain Monitor (gain settings 1 = 1, gain settings 2 = 2)
	Safety I/O Signal Monitor	Un015	Safety I/O Signal Monitor
Input Signal Monitor	Input Signal Monitor	Un005	Input Signal Monitor
Output Signal Monitor	Output Signal Monitor	Un006	Output Signal Monitor
Service Life Monitor	Installation Environment Monitor – SERVOPACK	Un025	SERVOPACK Installation Environment Monitor [%]
	Installation Environment Monitor – Servomotor*2	Un026	Servomotor Installation Environment Monitor [%]
	Service Life Prediction Monitor – Built-in Fan	Un027	Built-in Fan Remaining Life Ratio [%]
	Service Life Prediction Monitor – Capacitor	Un028	Capacitor Remaining Life Ratio [%]
	Service Life Prediction Monitor – Surge Prevention Circuit	Un029	Surge Prevention Circuit Remaining Life Ratio [%]
	Service Life Prediction Monitor – Dynamic Brake Circuit	Un02A	Dynamic Brake Circuit Remaining Life Ratio [%]
Product Information	Motor – Resolution	Un084	Linear Encoder Pitch (Scale pitch = Un084 × 10^{Un085} [pm])
		Un085	Linear Encoder Pitch Exponent (Scale pitch = Un084 × 10^{Un085} [pm])
–	–	Un020	Rated Motor Speed [min^{-1}]
	–	Un021	Maximum Motor Speed [min^{-1}]

*1. You can use Un010 to monitor the upper limit setting for the maximum motor speed or the upper limit setting for the encoder output resolution.
You can monitor the upper limit of the encoder output resolution setting (Pn281) for the current maximum motor speed setting (Pn385), or you can monitor the upper limit of the maximum motor speed setting for the current encoder output resolution setting.
Select which signal to monitor with Pn080 = n.X□□□ (Calculation Method for Maximum Speed or Encoder Output Pulses).
- If Pn080 = n.0□□□, the encoder output resolution (Pn281) that can be set is displayed.
- If Pn080 = n.1□□□, the maximum motor speed (Pn385) that can be set is displayed in mm/s.

*2. This applies to the following motors. The display will show 0 for all other models.
SGM7M, SGM7J, SGM7A, SGM7P, SGM7G, SGMMV, SGM7E, SGM7F, and SGMCV

Index

Symbols

/ALM-RST - 12-41
/ALM-RST (Alarm Reset Input) signal - - - - - - - - - - 12-41
/BK - 5-37
/BK (Brake) signal - 5-37
/CLT (Torque Limit Detection) signal - - - - - - - - - - - 6-73
/COIN (Positioning Completion) signal - - - - - - - - - - - 6-37
/C-SEL - 6-61
/CSEL(Control Selection) signal - - - - - - - - - - - - - - 6-61
/G-SEL - 8-67
/HWBB1 - 4-51
/HWBB2 - 4-51
/INHIBIT - 6-39
/N-CL - 6-65
/N-CL (Reverse External Torque Limit) signal - - - - - - 6-65
/NEAR - 6-38
/NEAR (Near) signal - 6-38
/P-CL - 6-65
/P-CL (Forward External Torque Limit) signal - - - - - - 6-65
/P-CON - 8-75
/P-CON (Proportional Control) signal - - - - - - - - - - - 8-75
/PSEL - 6-34
/PSELA - 6-34
/S-ON - 5-17
/S-ON (Servo ON) signal - - - - - - - - - - - - - - - - - - 5-17
/SPD-A - 6-55
/SPD-B - 6-55
/SPD-D - 6-55
/S-RDY - 6-12
/S-RDY (Servo Ready) signal - - - - - - - - - - - - - - - 6-12
/TGON - 6-11
/TGON (Rotation Detection) signal - - - - - - - - - - - - 6-11
/V-CMP - 6-27
/V-CMP (Speed Coincidence Detection) signal - - - - - - 6-27
/VLT - 6-46
/VLT (Speed Limit Detection) signal - - - - - - - - - - - 6-46
/WARN - 6-10
/WARN (Warning) signal - - - - - - - - - - - - - - - - - - 6-10
/ZCLAMP - 6-25

A

A.CC0 - 6-85
absolute encoder - 6-74
resetting - 5-52
wiring - 4-26
AC power supply input
setting - 5-14
AC Reactor
wiring - 4-24
additional adjustment functions - - - - - - - - - - - - - - 8-66
alarm code output - 12-5
alarm reset possibility - 12-5
alarm tracing - 9-18
ALM - 6-9
ALM (Servo Alarm) signal - - - - - - - - - - - - - - - - - - 6-9
ALO1 - 6-10
ALO2 - 6-10
ALO3 - 6-10
analog input circuits - 4-45
Analog Monitor Connector - - - - - - - - - - - - - - - - - 4-52
analog monitor factors - - - - - - - - - - - - - - - - - - - 9-12
anti-resonance control - - - - - - - - - - - - - - - - - - - 8-51
automatic detection of connected motor - - - - - - - - - 5-16
automatic gain switching - - - - - - - - - - - - - - - - - - 8-67
automatic notch filters - - - - - - - - - - - - - - - - - - - 8-32
autotuning with a host reference - - - - - - - - - - - - - 8-35
autotuning without a host reference - - - - - - - - - - - - 8-24

B

base block (BB) - xi
battery
replacement - 12-3
block diagram - 2-12
brake operation delay time - - - - - - - - - - - - - - - - - 5-36
brake release delay time - - - - - - - - - - - - - - - - - - 5-36

C

CCW - 5-18
clearing alarm history - - - - - - - - - - - - - - - - - - 12-43
CLR - 6-33
CLR (Position Deviation Clear) signal - - - - - - - - - - - 6-33
CN1 - 4-35
CN2 - 4-25
CN3 - 4-52
CN5 - 4-52
CN7 - 4-52
CN8 - 4-50
coasting - 5-41
coasting to a stop - 5-41
coefficient of speed fluctuation - - - - - - - - - - - - - - 2-11
compatible adjustment functions - - - - - - - - - - - - - - 8-87
Computer Connector - 4-52
connecting a safety function device - - - - - - - - - - - 11-13
control method selection - - - - - - - - - - - - - - - - - - 5-13
countermeasures against noise - - - - - - - - - - - - - - - 4-5
current control mode selection - - - - - - - - - - - - - - - 8-73
current gain level setting - - - - - - - - - - - - - - - - - - 8-73
custom tuning - 8-42
CW - 5-18

D

DATA/SHIFT Key - 13-3
DC power supply input - - - - - - - - - - - - - - - - - - - 4-12
setting - 5-14
DC Reactor
terminals - 4-11
wiring - 4-24
decelerating to a stop - - - - - - - - - - - - - - - - - - - 5-41
detection timing for Overload Alarms (A.720) - - - - - - 5-45
detection timing for Overload Warnings (A.910) - - - - - 5-44
deviation counter - 6-33
diagnostic output circuits - - - - - - - - - - - - - - - - - 4-51
diagnostic tools - 8-93
displaying alarm history - - - - - - - - - - - - - - - - - - 12-42
DOWN Key - 13-3
dynamic brake applied - - - - - - - - - - - - - - - - - - - 5-41
dynamic brake stopping - - - - - - - - - - - - - - - - - - - 5-41

E

EasyFFT - 8-95
EDM1 - 11-9
EDM1 (External Device Monitor) signal - - - - - - - - - - 11-9
electronic gear - 5-46
encoder divided pulse output - - - - - - - - - - - 6-48, 10-7
setting - 6-53
signals - 6-48
encoder resolution - - - - - - - - - - - - - - - - - 5-48, 6-53
estimating the moment of inertia - - - - - - - - - - - - - 8-16
examples of connections to host controllers - - - - - - 15-2
External Regenerative Resistor - - - - - - - - - - - - - - 5-58
external torque limits - 6-65

F

feedforward - 8-33, 8-87
feedforward compensation - - - - - - - - - - - - - - - - - 8-87
FG - 4-37
forcing the motor to stop - - - - - - - - - - - - - - - - - 6-107
forward direction - 10-6
forward rotation - 5-18
friction compensation - - - - - - - - - - - - - - - 8-33, 8-70
fully-closed system - 10-2

G

gain switching - 8-66
gravity compensation - 8-71
grounding - 4-8
group 1 alarms - 5-42
group 2 alarms - 5-42

H

hard wire base block (HWBB) - - - - - - - - - - - - - - - - 11-4
HWBB input signal specifications - - - - - - - - - - - - 11-6
hard wire base block (HWBB) state - - - - - - - - - - - - 11-5
detecting errors in HWBB signal - - - - - - - - - - - - 11-6
resetting - 11-5
holding brake - 5-36
HWBB - 11-4, 11-5
detecting errors in HWBB signal - - - - - - - - - - - - 11-6
HWBB input signal specifications - - - - - - - - - - - - 11-6
HWBB state
resetting - 11-5

I

I/O signals
allocations - 6-5
functions - 4-35
monitoring - 9-4, 9-6
names - 4-35
wiring example - 4-39
initializing the vibration detection level - - - - - - - - - - - 6-99
input signals
allocations - 6-5
internal set speed - 6-57
internal set speed control - - - - - - - - - - - - - - - 6-55, 6-59
internal torque limits - 6-64
I-P control - 8-83

J

jogging - 7-7

L

limiting torque - 6-64
limiting torque with an analog reference - - - - - - - - - - 6-68
limiting torque with an external torque limit and an - - - - 6-70
Linear Encoder
wiring example - 4-26
linear encoder
feedback resolution - 5-49
scale pitch setting - 5-19
Linear Servomotor - xi
line-driver output circuits - - - - - - - - - - - - - - - - - - 4-49
list of alarms - 12-5
list of parameters - 14-2
list of warnings - 12-48

M

Main Circuit Cable - xi
manual gain switching - 8-67
mechanical analysis - 8-93
mode switching
(changing between proportional and PI control) - - - - - 8-89
MODE/SET Key - 13-3
Momentary Power Interruption Hold Time - - - - - - - - - 6-13

monitor display (Un□□□) operations - - - - - - - - - - - 13-8
monitor factors - 9-12
motor current detection signal
automatic adjustment - - - - - - - - - - - - - - - - - 6-103
manual adjustment - - - - - - - - - - - - - - - - - - - 6-105
offset - 6-103
motor direction setting - - - - - - - - - - - - - - - - - - - 5-18
motor maximum speed - - - - - - - - - - - - - - - - - - - 6-16
motor overload detection level - - - - - - - - - - - - - - - 5-44
multiturn limit - 6-83
Multiturn Limit Disagreement - - - - - - - - - - - - - - - - 6-85

N

Noise Filter - 4-6
Noise Filter connection precautions - - - - - - - - - - - - 4-7
N-OT - 5-31, 5-32
N-OT (Reverse Drive Prohibit) signal - - - - - - - - - - - - 5-32
notch filters - 8-79, 8-81

O

offset - 6-19
open-collector output circuits - - - - - - - - - - - - - - - 4-48
operation for momentary power interruptions - - - - - - - 6-13
origin search - 7-25
output phase form - 6-49
overheat protection - 6-110
Overheat Protection Input - - - - - - - - - - - - - - - - - - 4-35
overload warnings - 5-44
overtravel - 5-31
warnings - 5-34

P

Panel Operator - 13-3
key names and functions - - - - - - - - - - - - - - - - 13-3
status display - 13-4
PAO - 6-48, 10-7
parameter settings recording table - - - - - - - - - - - - 14-34
parameters
classification - 5-4
initializing parameter settings - - - - - - - - - - - - - - 5-11
notation (numeric settings) - - - - - - - - - - - - - xii, 5-5
notation (selecting functions) - - - - - - - - - - - - xii, 5-5
setting methods - 5-6
write prohibition setting - - - - - - - - - - - - - - - - - 5-8
PBO - 6-48, 10-7
PCO - 6-48, 10-7
photocoupler input circuits - - - - - - - - - - - - - - - - - 4-47
photocoupler output circuits - - - - - - - - - - - - - - - - 4-49
PI control - 8-83
PLUS - 6-31
polarity detection - 5-27
polarity sensor - 5-26
position control - 6-30
position integral - 8-92
position loop gain - 8-77
position reference input circuits - - - - - - - - - - - - - - 4-45
positioning completed width - - - - - - - - - - - - - - - - 6-37
P-OT - 5-31, 5-32
P-OT (Forward Drive Prohibit) signal - - - - - - - - - - - 5-32
program jogging - 7-20
operation pattern - 7-20
PULS - 4-36
Pulse Reference Input - - - - - - - - - - - - - - - - - - - 4-36

R

reactors
AC reactor wiring - 4-24
DC reactor connection terminal - - - - - - - - - - - - - 4-11
DC reactor wiring - 4-24
reference pulse form - 6-31
reference pulse inhibition function - - - - - - - - - - - - - 6-39
reference pulse input multiplication switching - - - - - - 6-34
reference pulse input multiplier - - - - - - - - - - - - - - 6-34
reference unit - 5-46
Regenerative Resistor
connection - 4-22
regenerative resistor - 5-58
regenerative resistor capacity - - - - - - - - - - - - - - - 5-58
resetting alarms - 12-41
resetting alarms detected in Option Modules - - - - - - 12-44
reverse direction - 10-6
risk assessment - 11-4
Rotary Servomotor - xi

S

Safety Function Signals - - - - - - - - - - - - - - - - - - - 4-50
safety functions - 11-3
application examples - - - - - - - - - - - - - - - - - 11-10
monitoring - 9-6
precautions - 11-3
verification test - 11-12
safety input circuits - 4-50
scale pitch - 5-19
selecting combined control methods - - - - - - - - - - - - 6-59
selecting the phase sequence
for a Linear Servomotor - - - - - - - - - - - - - - - - - - 5-24
selecting torque limits - - - - - - - - - - - - - - - - - - - 6-64
SEMI F47 function - 6-14
Serial Communications Connector - - - - - - - - - - - - - 4-52
Serial Converter Unit - - - - - - - - - - - - - - - - - - - 5-19
Servo Drive - xi
servo gains - 8-76
servo lock - xi
servo OFF - xi
servo ON - xi
Servo System - xi

Servomotor - xi
Servomotor stopping method for alarms - - - - - - - - - 5-42
SERVOPACK - xi
inspections and part replacement - - - - - - - - - - 12-2
part names - 1-4
ratings - 2-2
specifications - 2-7
status display - 13-4
status displays - 13-4
setting the origin - 5-55
setting the position deviation overflow alarm level - - - - 8-8
setting the position deviation overflow alarm level
at servo ON - 8-10
setting the vibration detection level - - - - - - - - - - - - 8-10
setting the warning code output - - - - - - - - - - - - - 6-10
setup parameters - 5-4
SG - 6-10
SigmaWin+ - xi
SIGN - 4-36, 6-31
Sign of Reference Input - - - - - - - - - - - - - - - - - - 4-36
signal allocations - 6-5
single-phase AC power supply input
setting - 5-15
single-phase, 200-VAC power supply input
wiring example - 4-17
sink circuits - 4-47
smoothing - 6-35
soft start - 6-24
software reset - 6-97
source circuits - 4-47
speed control - 6-17
speed detection method selection - - - - - - - - - - - - 8-74
speed feedforward - 8-87
speed limit during torque control - - - - - - - - - - - - - 6-45
speed loop gain - 8-78
speed loop integral time constant - - - - - - - - - - - - 8-78
speed reference
automatic offset adjustment - - - - - - - - - - - - - - 6-20
filter - 6-24
manual offset adjustment - - - - - - - - - - - - - - - 6-22
Speed Reference Input Gain - - - - - - - - - - - - - - - - 6-19
Spring Opener - 4-14
stopping by applying the dynamic brake - - - - - - - - - 5-41
stopping method for servo OFF - - - - - - - - - - - - - - 5-42
storage humidity - 2-7
storage temperature - 2-7
surrounding air humidity - - - - - - - - - - - - - - - - - - 2-7
surrounding air temperature - - - - - - - - - - - - - - - - - 2-7
switching condition A - 8-67

T

test without a motor - 7-27
TH - 4-35
three-phase AC power supply input
setting - 5-15
three-phase, 200-VAC power supply input - - - - - - - - 4-11
torque control - 6-40
automatic offset adjustment - - - - - - - - - - - - - - 6-41
manual offset adjustment - - - - - - - - - - - - - - - - 6-43
torque feedforward - 8-87
torque reference
input filter - 6-45
torque reference filter - 8-79
Torque Reference Input - - - - - - - - - - - - - - - - - - - 4-36
Torque Reference Input Gain - - - - - - - - - - - - - - - - 6-41
T-REF - 4-36, 6-40, 6-68
T-REF (Torque Reference Input) signal - - - - - - - - - - - 6-40
trial operation
position control - 7-15
position control from the host controller with the
SERVOPACK used for speed control - - - - - - - - - 7-14
speed control - 7-13
troubleshooting alarms - - - - - - - - - - - - - - - - - - 12-12
troubleshooting warnings - - - - - - - - - - - - - - - - - 12-50
tuning parameters - 5-5
tuning-less
load level - 8-14
rigidity level - 8-14
tuning-less function - 8-12

U

UP Key - 13-3
utility function (Fn□□□) operations - - - - - - - - - - - - 13-8

V

vibration suppression - 8-56
V-REF - 6-17
V-REF (Speed Reference Input) signal - - - - - - - - - - - 6-17

W

warning code output - 12-48
writing parameters - 5-20

Z

zero clamping - 5-41, 6-25
zero clamping level - 6-26
zero-speed stopping - 5-41

Revision History

The date of publication, revision number, and web revision number are given at the bottom right of the back cover. Refer to the following example.

MANUAL NO. SIEP S800001 26C <2>-1
- Web revision number
- Revision number

Published in Japan September 2014
- Date of publication

Date of Publication	Rev. No.	Web Rev. No.	Section	Revised Contents
September 2023	<22>	0	2.1.1, 4.2, 4.4.3, 4.5.4, 6.12.1, 6.12.4, 6.13.4, 12.2.2	Partly revised.
			Back cover	Revision: Address
February 2023	<21>	0	Preface, 1.2, 3.7, 6.18.1, 12.2.2	Partly revised.
September 2022	<20>	0	6.1.7, 6.12.6, 8.12.1, 10.3.2, 12.2.1, 12.2.2, 14.1.2	Partly revised.
			Back cover	Revision: Address
February 2022	<19>	0	Preface,5.16.1, 5.18.1, 6.12.9, 7.4.4, 12.2.2	Partly revised.
			Back cover	Revision: Address
July 2021	<18>	0	All chapters	Partly revised.
August 2020	<17>	2	5.16.1, 6.8.2, 10.3.4	Partly revised.
February 2020		1	4.4.3, 5.16.1, 5.18.1	Addition: Information on Linear Encoder from Canon Precision Inc.
			Back cover	Revision: Address
October 2019		0	All chapters	Partly revised.
January 2019	<16>	0	5.1.4, 7.6.3	Revision: Information in table of restrictions
			9.2.2, 9.2.3, 12.2.6, 12.2.7, 15.1.4, 15.2.1	Partly revised.
			12.2.3	Addition: Reset procedure with the SigmaWin+
December 2018	<15>	0	Back cover	Revision: Address
September 2018	<14>	0	Preface	Partly revised.
			2.1.1	Revision: Information on built-in regenerative resistor power loss [W] for SGD7S-120A, -180A, -200A of three-phase, 200 VAC input Revision: Information on built-in regenerative resistor power loss [W] for SGD7S-120A of single-phase, 200 VAC input
			4.4.3, 5.16.1	Addition: Absolute linear encoder from Fagor Automation S. Coop.
			12.2.1, 12.2.2	Deletion: A.F50
			Back cover	Revision: Address
December 2017	<13>	0	Preface	Partly revised.
			Preface, 1.4.2, 1.5.1, 5.13.1, 5.16.1, 13.4.16	Addition: Information on Rotary Servomotors (SGM7M)
			1.2	Revision: Information on nameplate
			1.5.3	Addition: Information on SGLFW2-90A200A□L, SGLFW2-90A560A, and SGLFW2-1DA560A
July 2017	<12>	0	Back cover	Revision: Address

Date of Publication	Rev. No.	Web Rev. No.	Section	Revised Contents
March 2017	<11>	0	Preface, 6.1.2, 12.4	Partly revised.
			4.4.3, 5.16.1	Addition: Information on SQ47 and SQ57 Linear Encoders from Magnescale Co., Ltd.
			5.16.1	Addition: Information on LIC2100-Series and LC415 Linear Encoders from Heidenhain Corporation.
			5.16.1, 5.18.1	Addition: Information on RESOLUTE Linear Encoders from Renishaw PLC.
			12.2.2, 14.1.2	Revisions: Reference information
December 2016	<10>	0	Preface	Partly revised.
			1.4.2, 4.4.2, 4.4.3, 5.16.1, 5.17, 6.12	Addition: Information on Rotary Servomotors with 24-bit batteryless absolute encoders.
			Back cover	Revision: Address
November 2016	<9>	0	Preface	Partly revised.
			1.5.2	Addition: Information on Direct Drive Servomotors (SGM7F-□□A, -□□M, -□□N)
			4.4.3, 5.16.1, 5.18.1	Addition: Information on Renishaw PLC EVOLUTE linear scales
September 2016	<8>	0	All chapters	Addition: Information on Direct Drive Servomotors (SGM7E)
			Preface	Partly revised.
			2.1.3, 4.2, 4.5	Revision: “Linear Servomotor overheat protection signal input” changed to “over-heat protection input.”
			3.7	Addition: EMC installations for single-phase 200-VAC and single-phase 100-VAC models
			6.18, 8.12.3	Newly added.
			Chapter 12	Addition: A.862 and A.93B
			Chapter 14	Addition: Pn022, Pn475, Pn476, Pn61A, Pn61B, Pn61C, and Pn61D
			15.2.2	Addition: Un02F
April 2016	<7>	0	All chapters	Addition: Information on SGM7F Direct Drive Servomotors Deletion: Information on SGLC Linear Servomotors
			Preface, 9.1, 9.2	Partly revised.
			2.1.1.	Addition: Information on input current of control power supply
			Chapter 14	Deletion: Pn52D
November 2015	<6>	0	All chapters	Addition: Information on SERVOPACKs with single-phase, 100-VAC power supply inputs
			Preface	Revision: Information on certification for standards
			4.4.3, 5.16.1, 6.8.1	Addition: Information on SQ10 Linear Encoder from Magnescale Co., Ltd.
October 2015	<5>	0	All chapters	Revision: Information on SigmaWin+ procedures
			Preface, Chapter 1	Addition: Information on SGMMV Rotary Servomotors
			Preface, 9.4.1	Partly revised.
			1.5.2	Addition: Information on Direct Drive Servomotors (SGMCV-16D and -35D)
			9.5	Newly added.
			Chapter 12	Addition: A.bF5, A.bF6, A.bF7, A.bF8, and FL-6
			Back cover	Revision: Address
April 2015	<4>	0	All chapters	Addition: Information on dynamic brake option
			Preface, 7.6.3, 8.3.3, 8.3.5, 12.3.2	Partly revised.
			12.2.2, 12.4, 14.1.2	Revision: Reference information
			14.1.2	Revision: Information on Pn601 and Pn604
			Front cover, back cover, spine	Revision: Format

Date of Publication	Rev. No.	Web Rev. No.	Section	Revised Contents
March 2015	<3>	0	All chapters	Addition: Information on SERVOPACKs with single-phase, 200-VAC power supply input Addition: Information on BTO specification Addition: Information on Safety Modules Partly revised.
			Preface	Addition: Information on dynamic brake Revision: Information on certification for standards
			2.1.1	Revision: Power loss
			2.3.2	Addition: Information on duct-ventilated SERVOPACKs Revision: External dimensions of the following three-phase, 200-VAC SERVOPACKs: SGD7S-470A, -550A, -590A, and -780A
			4.3.5	Revision: Illustration of SGD7S-470A, -550A, -590A, and -780A SERVOPACKs
			4.2, 4.4.3, 4.5.3, 6.12.1	Addition: Information on Battery for absolute encoder
			5.16.1, 5.18.1	Addition: Information on Linear Encoders (ST1381 and ST1382) from Mitutoyo Corporation
			8.12.3, 14.1.2	Revision: Information on Current Control Mode Selection
			Back cover	Revision: Address
September 2014	<2>	1	12.4	Partly revised.
July 2014		0	–	Based on Japanese user's manual, SIJP S800001 26C<2> printed in July 2014.
			All chapters	Addition: Information on SGD7S-330A, -470A, -550A, -590A, and -780A
				Addition: Information on supplementary document (Manual No.: SIEP S800001 50)
May 2014	<1>	0	Preface	Revision: Safety Parameters
			3.7	Newly added.
			Chapter 12	Addition: A.EC8 and A.EC9
April 2014	–	–	–	First edition

Σ-7-Series AC Servo Drive

Σ-7S SERVOPACK with Analog Voltage/Pulse Train References Product Manual

IRUMA BUSINESS CENTER (SOLUTION CENTER)
480, Kamifujisawa, Iruma, Saitama, 358-8555, Japan
Phone: +81-4-2962-5151 Fax: +81-4-2962-6138
www.yaskawa.co.jp

YASKAWA AMERICA, INC.
2121, Norman Drive South, Waukegan, IL 60085, U.S.A.
Phone: +1-800-YASKAWA (927-5292) or +1-847-887-7000 Fax: +1-847-887-7310
www.yaskawa.com

YASKAWA ELÉTRICO DO BRASIL LTDA.
777, Avenida Piraporinha, Diadema, São Paulo, 09950-000, Brasil
Phone: +55-11-3585-1100 Fax: +55-11-3585-1187
www.yaskawa.com.br

YASKAWA EUROPE GmbH
Philipp-Reis-Str. 6, 65795 Hattersheim am Main, Germany
Phone: +49-6196-569-300 Fax: +49-6196-569-398
www.yaskawa.eu.com E-mail: info@yaskawa.eu.com

YASKAWA ELECTRIC KOREA CORPORATION
6F, 112, LS-ro, Dongan-gu, Anyang-si, Gyeonggi-do, Korea
Phone: +82-31-8015-4224 Fax: +82-31-8015-5034
www.yaskawa.co.kr

YASKAWA ASIA PACIFIC PTE. LTD.
30A, Kallang Place, #06-01, 339213, Singapore
Phone: +65-6282-3003 Fax: +65-6289-3003
www.yaskawa.com.sg

YASKAWA ELECTRIC (THAILAND) CO., LTD.
59, 1F-5F, Flourish Building, Soi Ratchadapisek 18, Ratchadapisek Road, Huaykwang, Bangkok, 10310, Thailand
Phone: +66-2-017-0099 Fax: +66-2-017-0799
www.yaskawa.co.th

YASKAWA ELECTRIC (CHINA) CO., LTD.
22F, Link Square 1, No.222, Hubin Road, Shanghai, 200021, China
Phone: +86-21-5385-2200 Fax: +86-21-5385-3299
www.yaskawa.com.cn

YASKAWA ELECTRIC (CHINA) CO., LTD. BEIJING OFFICE
Room 1011, Tower W3 Oriental Plaza, No.1, East Chang An Avenue,
Dong Cheng District, Beijing, 100738, China
Phone: +86-10-8518-4086 Fax: +86-10-8518-4082

YASKAWA ELECTRIC TAIWAN CORPORATION
12F, No. 207, Section 3, Beishin Road, Shindian District, New Taipei City 23143, Taiwan
Phone: +886-2-8913-1333 Fax: +886-2-8913-1513 or +886-2-8913-1519
www.yaskawa.com.tw

YASKAWA

YASKAWA ELECTRIC CORPORATION

In the event that the end user of this product is to be the military and said product is to be employed in any weapons systems or the manufacture thereof, the export will fall under the relevant regulations as stipulated in the Foreign Exchange and Foreign Trade Regulations. Therefore, be sure to follow all procedures and submit all relevant documentation according to any and all rules, regulations and laws that may apply.

Specifications are subject to change without notice for ongoing product modifications and improvements.

© 2014 YASKAWA ELECTRIC CORPORATION

MANUAL NO. SIEP S800001 26T <22>-0

Published in Japan September 2023
23-4-19
Original instructions