DWG. NO. 900-185-968

RoHS

HOLDING BRAKE SPECIFICATIONS			
MOMENT OF INERTIA $GD^2/4$ (kg·m²)	HOLDING TORQUE (N·m)	RATED VOLTAGE	CAPACITY (W)
8.5×10^{-4}	43.1	DC24V 0~+10%	18.5

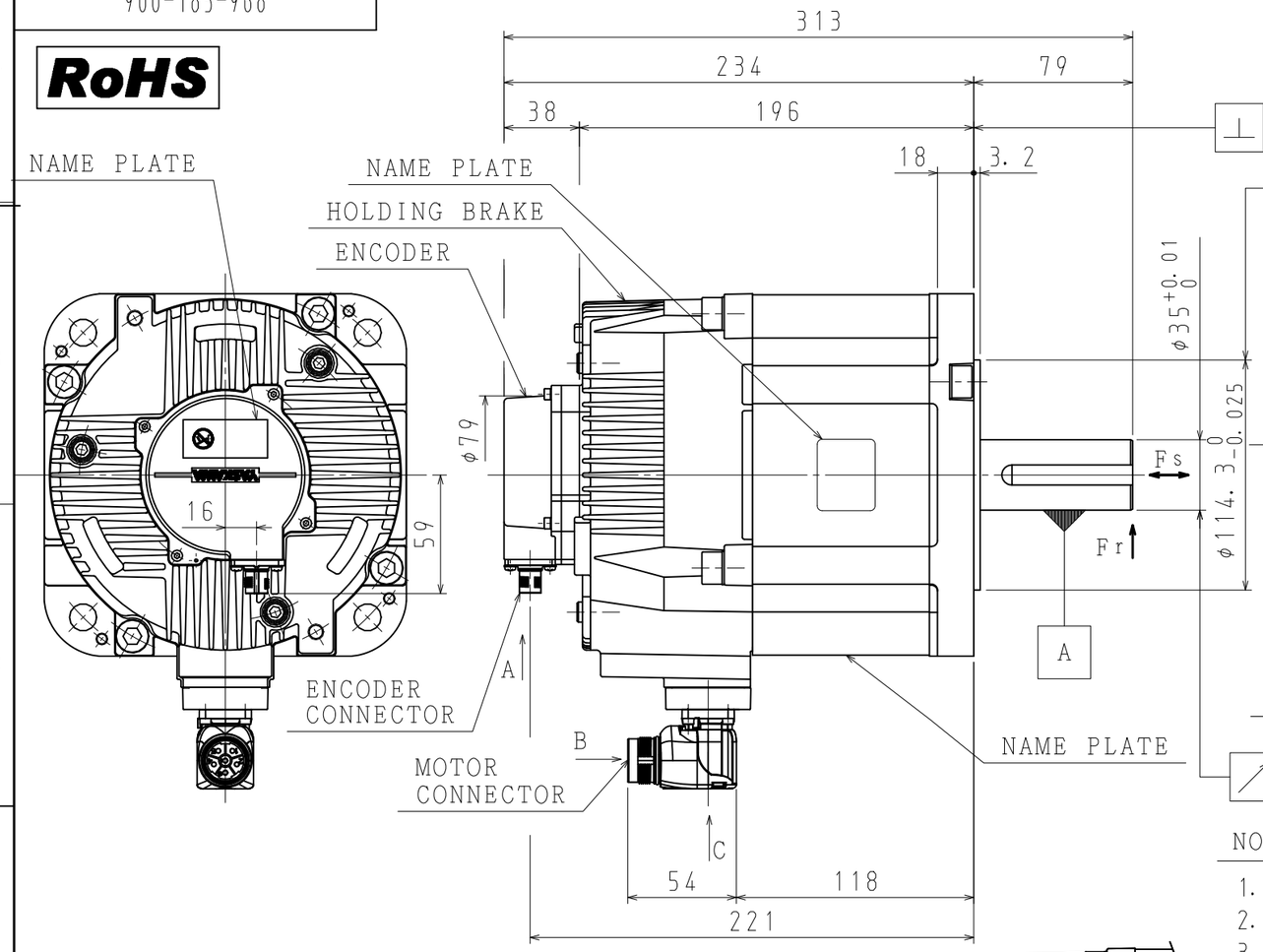

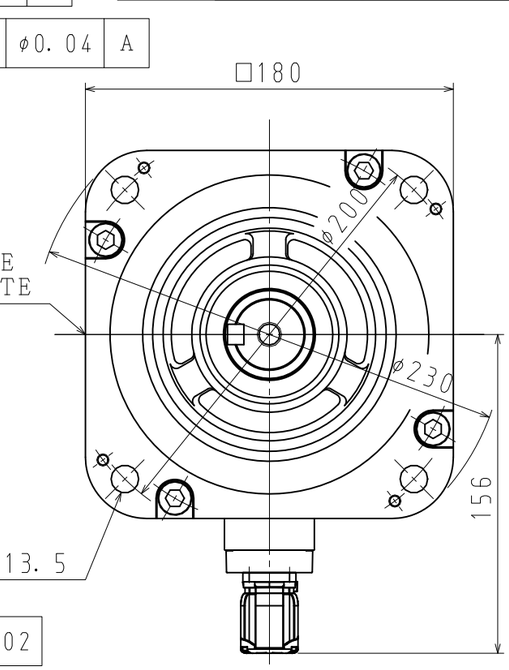

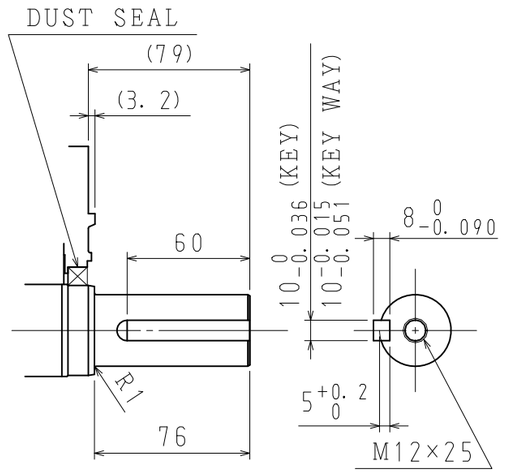

DETAIL OF SHAFT EXTENSION

NOTES.

1. ALL DIMENSIONS ARE IN MILLIMETERS.
2. MOTOR SPECIFICATIONS :900-172-590
3. ENCODER SPECIFICATIONS:900-172-503(24BIT ABSOLUTE)
4. HOLDING BRAKE CANNOT BE USED TO STOP MOTOR.
5. VIBRATION : 15μm OR BELOW AT RATED SPEED.
6. PLUGS AND CABLE CLAMPS ARE OPTIONAL.
7. READ AND UNDERSTAND DOCUMENT PACKED WITH MOTOR (SAFETY PRECAUTIONS), AND BE CAREFUL USING MOTOR.
8. DEGREES OF PROTECTION:IP67 EXCEPT FOR SHAFT OPENING. MUST USE SPECIFIED CONNECTORS FOR MOTOR.
9. DO NOT TOUCH EACH OF CONNECTOR PINS DIRECTLY. IT CAUSE FAILURE.
10. IN CASE OF MOUNTING THIS MOTOR HORIZONTAL, TO PLACE THE CONNECTOR DOWN IS RECOMMENDABLE.
11. USE HEXAGON SOCKET HEAD CAP SCREWS FOR MOUNTING MOTOR.
12. MOTOR CONNECTOR COULD BE TURNED IN THE RANGE OF ☆ WITHIN 10 TIMES.

ENCODER TERMINAL CONNECTION

1	PG5V
2	PG0V
3	FRAME GROUND
4	BAT (+)
5	BAT (-)
6	DATA (+)
7	DATA (-)
8	-
CON. CASE	FRAME GROUND

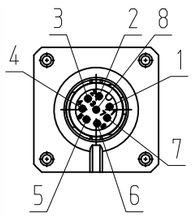

VIEW A

RECEPTACLE SIZE:M12

HOUSING:SACC-MSQ-M12MS-25-3,2 SCO

MAKER:PHOENIX CONTACT

MOTOR TERMINAL CONNECTION

1	PHASE V
2	BRAKE
4	BRAKE
5	PHASE U
6	PHASE W
FG	FRAME GROUND
CON. CASE	FRAME GROUND

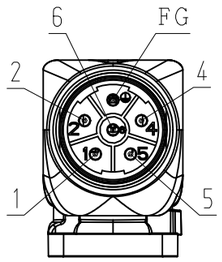

VIEW B

RECEPTACLE SIZE:M23

HOUSING:SF-5EP1N8AAD00S

MAKER:PHOENIX CONTACT

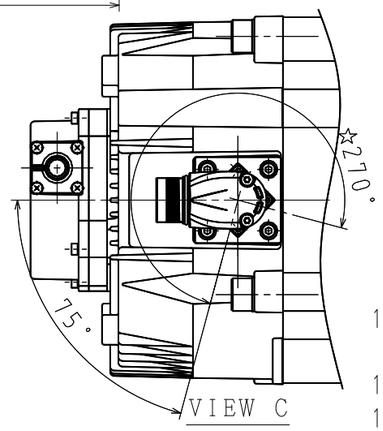

VIEW C

TYPE	RATED OUTPUT kW	RATED TORQUE N·m	TIME RATING	RATED SPEED min⁻¹	VOLTAGE Vrms	RATED CURRENT Arms	THERMAL CLASS	WEIGHT kg	ALLOWABLE RADIAL LOAD Fr N	ALLOWABLE THRUST LOAD Fs N
SGM7G-44D7F6H	4.4	28.4	CONT.	1500	400 (3PHASE)	16.5	F	24.0	1470 (AT SHAFT END)	490

SCALE 1:3	YASKAWA	DRWN.	H. KATO
		CHKD.	T. HIROSE
		APRV.	K. AOKI

TITLE AC SERVOMOTOR Σ-7 SERIES
SGM7G MODEL 4.4kW

DRWN. DATE Oct. 19' 15
DWG. NO. 900-185-968
REV.

SIZE A3